# APPENDIX
# Detailed Requirements
# for ECHONET Device objects

Release R rev.1

© 2000 - 2023 ECHONET Consortium

# Contents

Contents ..... i

Chapter1 Outline of this document ..... 1-1

Chapter2 Device Object Super Class Requirements ..... 2-1

2. 1 “Operation status” property ..... 2-5
2. 2 “Installation location” property ..... 2-5
2. 3 “Standard version information” property ..... 2-7
2. 4 “Fault status” property ..... 2-7
2. 5 “Fault description” property ..... 2-7
2. 6 “Manufacturer code” property ..... 2-10
2. 7 “Business facility code” property ..... 2-10
2. 8 “Product code” property ..... 2-10
2. 9 “Production number” property ..... 2-11
2. 10 “Production date” property ..... 2-11
2. 11 “Property map” property ..... 2-11
2. 12 “Identification number” property ..... 2-12
2. 13 “Manufacturer’s fault code” property ..... 2-13
2. 14 “Current limit setting” property ..... 2-13
2. 15 “Power-saving operation setting” property ..... 2-14
2. 16 "Remote control setting" property ..... 2-14
2. 17 “Cumulative operating time” property ..... 2-16
2. 18 “Current time setting” property ..... 2-16
2. 19 “Current date setting” property ..... 2-16
2. 20 “Measured instantaneous power consumption” property ..... 2-16
2. 21 “Measured cumulative electric energy consumption” property ..... 2-16
2. 22 “Power limit setting” property ..... 2-17

Chapter3 Detailed Requirements for Device Objects ..... 3-1

3. 1 Sensor-related Device Class Group ..... 3-1
3. 1. 1 Requirements for gas leak sensor class ..... 3-3
3. 1. 2 Requirements for crime prevention sensor class ..... 3-5
3. 1. 3 Requirements for emergency button class ..... 3-7
3. 1. 4 Requirements for first-aid sensor class ..... 3-8
3. 1. 5 Requirements for earthquake sensor class ..... 3-10
3. 1. 6 Requirements for electric leak sensor class ..... 3-12
3. 1. 7 Requirements for human detection sensor class ..... 3-14
3. 1. 8 Requirements for visitor sensor class ..... 3-15
3. 1. 9 Requirements for call sensor class ..... 3-17
3. 1. 10 Requirements for condensation sensor class ..... 3-19



© 2000 - 2023 ECHONET Consortium

3. 1. 11 Requirements for air pollution sensor class ..... 3-20
3. 1. 12 Requirements for oxygen sensor class ..... 3-21
3. 1. 13 Requirements for illuminance sensor class ..... 3-22
3. 1. 14 Requirements for sound sensor class ..... 3-23
3. 1. 15 Requirements for mailing sensor class ..... 3-25
3. 1. 16 Requirements for weight sensor class ..... 3-26
3. 1. 17 Requirements for temperature sensor class ..... 3-27
3. 1. 18 Requirements for humidity sensor class ..... 3-28
3. 1. 19 Requirements for rain sensor class ..... 3-29
3. 1. 20 Requirements for water level sensor class ..... 3-30
3. 1. 21 Requirements for bath water level sensor class ..... 3-32
3. 1. 22 Requirements for bath heating status sensor class ..... 3-34
3. 1. 23 Requirements for water leak sensor class ..... 3-36
3. 1. 24 Requirements for water overflow sensor class ..... 3-37
3. 1. 25 Requirements for fire sensor class ..... 3-39
3. 1. 26 Requirements for cigarette smoke sensor class ..... 3-41
3. 1. 27 Requirements for $CO_2$ sensor class ..... 3-42
3. 1. 28 Requirements for gas sensor class ..... 3-43
3. 1. 29 Requirements for VOC sensor class ..... 3-45
3. 1. 30 Requirements for differential pressure sensor class ..... 3-47
3. 1. 31 Requirements for air speed sensor class ..... 3-48
3. 1. 32 Requirements for odor sensor class ..... 3-49
3. 1. 33 Requirements for flame sensor class ..... 3-51
3. 1. 34 Requirements for electric energy sensor class ..... 3-53
3. 1. 35 Requirements for current sensor class ..... 3-55
3. 1. 36 Requirements for water flow rate sensor class ..... 3-57
3. 1. 37 Requirements for micromotion sensor class ..... 3-58
3. 1. 38 Requirements for passage sensor class ..... 3-60
3. 1. 39 Requirements for bed presence sensor class ..... 3-62
3. 1. 40 Requirements for open/close sensor class ..... 3-63
3. 1. 41 Requirements for activity amount sensor class ..... 3-65
3. 1. 42 Requirements for human body location sensor ..... 3-67
3. 1. 43 Requirements for snow sensor class ..... 3-69
3. 1. 44 Requirements for air pressure sensor class ..... 3-70
3. 2 Air Conditioner-related Device Class Group ..... 3-71
3. 2. 1 Requirements for home air conditioner class ..... 3-73
3. 2. 2 Requirements for ventilation fan class ..... 3-96
3. 2. 3 Requirements for air conditioner ventilation fan class ..... 3-97
3. 2. 4 Requirements for air cleaner class ..... 3-104
3. 2. 5 Requirements for humidifier class ..... 3-106
3. 2. 6 Requirements for electric heater class ..... 3-110



© 2000 - 2023 ECHONET Consortium

3. 2. 7 Requirements for Fan heater class ..... 3-114
3. 2. 8 Requirements for electric storage heater class ..... 3-118
3. 2. 9 Requirements for package-type commercial air conditioner (indoor unit) (except those for facilities) class ..... 3-124
3. 2. 10 Requirements for package-type commercial air conditioner (outdoor unit) (except those for facilities) class ..... 3-128
3. 2. 11 Requirements for gas heat pump-type commercial air conditioner (indoor unit) class ..... 3-134
3. 2. 12 Requirements for gas heat pump-type commercial air conditioner (outdoor unit) class ..... 3-137
3. 2. 13 Requirements for range hood class ..... 3-141
3. 3 Housing/Facilities-related Device Class Group ..... 3-148
3. 3. 1 Requirements for electrically operated blind/shade class ..... 3-151
3. 3. 2 Requirements for electrically operated shutter class ..... 3-156
3. 3. 3 Requirements for electrically operated rain sliding door/shutter class ..... 3-161
3. 3. 4 Requirements for electrically operated gate class ..... 3-166
3. 3. 5 Requirements for electrically operated window class ..... 3-170
3. 3. 6 Requirements for automatically operated entrance door/sliding door class ..... 3-175
3. 3. 7 Requirements for sprinkler (for garden) class ..... 3-180
3. 3. 8 Requirements for electric water heater class ..... 3-182
3. 3. 9 Requirement for electric toilet seat (warm-water washing toilet seat, heating toilet seat, etc.) class ..... 3-202
3. 3. 10 Requirement for electric lock class ..... 3-206
3. 3. 11 Requirements for instantaneous water heater class ..... 3-209
3. 3. 12 Requirements for bathroom heater and dryer class ..... 3-218
3. 3. 13 Requirements for household solar power generation class ..... 3-228
3. 3. 14 Requirement for cold or hot water heat source equipment class ..... 3-240
3. 3. 15 Requirement for floor heater class ..... 3-249
3. 3. 16 Requirements for fuel cell class ..... 3-257
3. 3. 17 Requirements for storage battery class ..... 3-263
3. 3. 18 Requirements for electric vehicle charger/discharger class ..... 3-288
3. 3. 19 Requirements for engine cogeneration class ..... 3-314
3. 3. 20 Requirements for watt-hour meter class ..... 3-319
3. 3. 21 Requirements for water flowmeter class ..... 3-321
3. 3. 22 Requirements for gas meter class ..... 3-325
3. 3. 23 Requirements for LP gas meter class ..... 3-327
3. 3. 24 Requirements for power distribution board metering class ..... 3-333
3. 3. 25 Requirements for low-voltage smart electric energy meter class ..... 3-353
3. 3. 26 Requirements for smart gas meter class ..... 3-369
3. 3. 27 Requirements for high-voltage smart electric energy meter class ..... 3-378
3. 3. 28 Requirements for kerosene meter class ..... 3-397
3. 3. 29 Requirements for smart kerosene meter class ..... 3-399
3. 3. 30 Requirements for smart electric energy meter for sub-metering class ..... 3-407



© 2000 - 2023 ECHONET Consortium

3. 3. 31 Requirements for distributed generator's electric energy meter class ..... 3-420
3. 3. 32 Requirements for general lighting class ..... 3-435
3. 3. 33 Requirements for mono functional lighting class ..... 3-446
3. 3. 34 Requirements for lighting for solid light-emitting source class ..... 3-447
3. 3. 35 Requirements for buzzer class ..... 3-452
3. 3. 36 Requirements for electric vehicle charger class ..... 3-453
3. 3. 37 Household small wind turbine power generation ..... 3-463
3. 3. 38 Requirements for lighting system class ..... 3-468
3. 3. 39 Requirements for extended lighting system class ..... 3-470
3. 3. 40 Requirements for the multiple input PCS class ..... 3-475
3. 3. 41 Requirements for the hybrid water heater class ..... 3-481
3. 3. 42 Requirements for bidirectional high voltage smart electric energy meter class ..... 3-486
3. 3. 43 Requirements for the frequency control class ..... 3-524
3. 4 Cooking/Household-related Device Class Group ..... 3-557
3. 4. 1 Requirements for electric hot water pot (Electric thermos) ..... 3-559
3. 4. 2 Requirements for refrigerator class ..... 3-561
3. 4. 3 Requirements for combination microwave oven (electronic oven) class ..... 3-573
3. 4. 4 Requirements for cooking heater class ..... 3-588
3. 4. 5 Requirements for rice cooker class ..... 3-594
3. 4. 6 Requirements for washing machine class ..... 3-597
3. 4. 7 Requirements for commercial showcase class ..... 3-600
3. 4. 8 Requirements for clothes dryer class ..... 3-605
3. 4. 9 Requirements for washer and dryer class ..... 3-607
3. 4. 10 Requirements for the commercial showcase outdoor unit class ..... 3-636
3. 4. 11 Requirements for dishwasher and dryer class ..... 3-638
3. 5 Health-related Device Class Group ..... 3-668
3. 5. 1 Requirements for weighing machine class ..... 3-669
3. 6 Management/Operation-related Device Class Group ..... 3-670
3. 6. 1 Requirements for switch class (supporting JEM-A/HA terminals) ..... 3-671
3. 6. 2 Requirements for controller class ..... 3-672
3. 6. 3 Requirements for the DR event controller class ..... 3-679
3. 6. 4 Requirements for parallel processing combination-type power control class ..... 3-729
3. 7 Audiovisual-related Device Class Group ..... 3-732
3. 7. 1 Requirements for display class ..... 3-733
3. 7. 2 Requirements for television class ..... 3-739
3. 7. 3 Requirements for audio class ..... 3-741
3. 7. 4 Requirements for network camera ..... 3-744

Annex 1 Property Map Description Format ..... I



© 2000 - 2023 ECHONET Consortium

# Revision record

| | REVISED PARTS |
|---|---|
| Ver.1.01 Release B | • Added requirements for the "water flow rate sensor class", "micromotion sensor class", "passage sensor class", "bed presence sensor class", and "open/close sensor class" (class codes were newly established).<br>• Added detailed requirements to the "electric hot water pot (electric thermos) class".<br>• Added property requirements to the "water heater class". |
| Ver.2.00 Release B | • Added requirements to the "activity amount sensor class", "human body location sensor class", and "buzzer class" (class codes were newly established).<br>• Added detailed requirements to the "rice cooker class".<br>• Added property requirements to the "washing machine class" and "electric water heater using midnight power service class". |
| Ver.2.01 Release A | • Added a description indicating values in effective values to the "measured amount of electric energy" property (0xE0) for the "current sensor class" when the measured electric current is alternating current.<br>• Added a description indicating values in effective values, to the "measured value of current consumption" property (0xB9) for the "home air conditioner class" when the measured electric current is alternating current.<br>• Added a description indicating values in an effective value to the "measured value of current consumption" property (0xDA) for the "refrigerator class, when the measured electric current is alternating current.<br>• Corrected layout errors in human body existence information bitmap table for the "activity amount sensor class" and "human body location sensor class".<br>• Corrected errors in item numbers for the detailed description for the "activity amount sensor class" and "human body location sensor class".<br>• Reviewed the descriptions related to "residual volume control warning" property, "set value of residual volume control warning level 1" property, "set value of residual volume control warning level 2" property, "set value of residual volume control warning level 3" property, and "test call operation" property for the "LP gas meter class". |
| Ver.2.10 Preview | • Changed name from the "open/close level" property for the "electrically operated blind class" to "degree-of-opening property".<br>• Corrected clerical errors in the Annex. |
| Ver.2.10 Draft | • Corresponded the "shade angle setting property" for the "electrically operated blind class" with vertical blind.<br>• Added following properties to the "home air conditioner class".<br>Ventilation volume setting, degree of humidification setting, mounted air cleaning method, air purifier function operation status, mounted air refresh method, air refresher function operation |



© 2000 - 2023 ECHONET Consortium

| | |
|---|---|
| | status, mounted self-cleaning method, self-cleaning function operation status, and current limit setting property<br>・ Changed following properties for "home air conditioner class".<br>Operation mode, automatic control of air flow direction setting, air flow direction (vertical) setting, air flow direction (horizontal) setting, ventilation operation setting, measured value of room relative humidity, measured value of room temperature, measured cooled air temperature, and measured outdoor air temperature<br>・ Added following properties to the "electric water heater using midnight power service class".<br>Temperature of supplied water setting, bath water temperature setting, bath hot water addition function setting, lukewarm water temperature lowering function setting, bath hot water volume setting 2, and bath hot water volume setting 3<br>・ Added following properties to the "water heater class".<br>Bath hot water volume setting 3<br>・ Corrected clerical errors in the "electric water heater using midnight power service class" and "water heater class".<br>・ Added standard version information to the Annex 1-8.<br>・ Corrected clerical errors in the Annex. |
| Ver.2.10 Release A | ・ Corrected clerical errors in the Ver.2.10 Draft. |
| Ver.2.11 Release A | Corrected clerical errors in the Annex of the Ver.2.10 Release A. |
| Ver.3.00 Release A | Reviewed a part of descriptions in Annex 2.6 table F4. |
| Ver.3.00 Release B | 1. 4. 6 Added requirements to the "washer and dryer class".<br>Corrected clerical errors: |
| Ver.3.00 Release C | ・ Deleted annex.<br>・ Added/copied statements described in Table 4.2 through 4.7 of Section 2 ECHONET Communication Middleware Specifications to the "List of Objects" in the APPENDIX.<br>・ Added following sentences to the description of the "(1) operation status property" for requirements for the "home air conditioner", "refrigerator", "combination microwave oven (electronic oven)", and "washer and dryer" classes.<br>"When the property is OFF (0x31), values obtained from the other properties shall not be guaranteed, unless they are otherwise specified in this standard." |
| Ver.3.10 Release A | ・Corrected table numbers of Table 1.2 and succeeding tables. |
| Ver.3.11 Release A | ・Published for consortium members only. |
| Ver.3.11 Release B | ・ Added property requirements to the "home air conditioner class".<br>・ Added property requirements to the "refrigerator class".<br>・ Added property requirements to the "combination microwave oven (electronic oven) class".<br>・ Added property requirements to the "washer and dryer class".<br>・ Added and corrected the first part of the APPENDIX Chapter 1 Detailed Requirements for Device Objects |
| Ver.3.11 Release B | ・ Published for consortium members only. |
| Ver.3.12 Release A | ・ Published for consortium members only. |
| Ver.3.12 Release B | ・ Added "electrically operated shutter class".<br>・ Published for consortium members only. |



© 2000 - 2023 ECHONET Consortium

| | |
|---|---|
| Ver.3.12 Release C | • Added requirements to the "package-type commercial air conditioner (indoor unit) class".<br>• Added requirements to the "package-type commercial air conditioner (outdoor unit)" class. |
| Ver.3.20 Release A | • Changed "water heater class" to "instantaneous water heater class". Clarified classification of water heater function and bath water heating function.<br>• Described referent for communication definition objects.<br>• Published for consortium members only. |
| Ver.3.20 Release B | • Added property requirements to the "open/close sensor class".<br>• Published for consortium members only. |
| Ver.3.21 Release A | • Published for consortium members only. |
| Ver.3.30 Draft | • Published for consortium members only. |
| Ver.3.21 Release B | • Added detailed requirements to the "fan heater class".<br>• Added detailed requirements to the "humidifier class".<br>• Added detailed requirements to the "electrically operated rain sliding door class".<br>• Added detailed requirements to the "electric lock class".<br>• Newly added "snow sensor class".<br>• Added detailed requirements to the "electric toilet seat class".<br>• Added detailed requirements to the "sprinkler class".<br>• Newly added "floor heater class.<br>• Newly added "heat source equipment class".<br>• Added property requirements to the "washer and dryer class".<br>• Deleted electric lock unlocking permission status property of the "electrically operated shutter class".<br>• Published for consortium members only. |
| Ver.3.30 Release A | • Published for consortium members only. |
| Ver.3.40 Draft | • Published for consortium members only. |
| Ver.3.40 Release A | • Published for consortium members only. |
| Ver.3.40 Release B | • Added a description for operation status property to the table of the classes.<br>• Added a description of conditionally required property to the first part.<br>• Corrected a range of the "reserved for future use" in the list of sensors from 0x2BD to 0x2D (clerical errors)<br>• Home air conditioners Described both access/non-access arrangements.<br>Described both "Set" and "Get" cases for access rules of air purification mode setting (0xC7), refresh mode setting (0xC9), and self-washing mode setting (0xCB).<br>• Added descriptions for changing a property to mandatory (see the following table). |



© 2000 - 2023 ECHONET Consortium

| Device name | Corrections |
|---|---|
| Open/close sensor | Changed the indication in the "mandatory" column from "degree-of-opening detection status 1 and 2 (0xE0, 0xB1)" to "○".<br>Added a note of "one of these is mandatory" under the table. |
| Activity amount sensor | Changed the indication in the "mandatory" column from "activity amount level 1 and 2 (0xE0, 0xE2)" to "○".<br>Added a note of "one of these is mandatory" under the table. |
| Human body location sensor | Changed the indication in the "mandatory" column from "human body detection location 1 and 2 (0xE0, 0xE2)" to "○".<br>Added a note of "one of these is mandatory" under the table. |
| Home air conditioners | Changed the indication in the "mandatory" column from "Set" of the "operation status (0x80)" to "○". |
| Ventilation fans | Changed the indication in the "mandatory" column from "Set" of the "operation status (0x80)" to "○". |
| Air cleaners | Changed the indication in the "mandatory" column from "Set" of the "operation status (0x80)" to "○". |
| Package-type commercial air conditioners (indoor unit) | Changed the indication in the "mandatory" column from "Set" of the "operation status (0x80)" to "○". |
| Powered window shades | Changed the degree-of-opening level (0xE1) from optional to mandatory. |
| Devices using midnight power service<br>Electric water heaters | Changed the indication in the "mandatory" column from "automatic water heating setting (0xB0)" to "○".<br>Changed the automatic bath water heating mode setting (0xE3) from optional to mandatory. |
| Instantaneous water heaters | Changed the automatic bath water heating mode setting (0xE3) from optional to mandatory. |
| Cold or hot water heat source equipment | Added a note of "one of these is mandatory" under the table. |
| General lightings | Changed the indication in the "mandatory" column from "Set" of the "operation status (0x80)" to "○". |
| Refrigerator | Changed the door open/close status (0xB0) from optional to mandatory.<br>Added words of "any of the detectable doors" to the detailed requirements. |
| Rice cooker | Changed the indication in the "mandatory" column from "Rice cooking status (0xB1)" to "○".<br>Changed the rice cooking control setting (0xB2) from optional to mandatory. |
| Weighing machine | Changed the indication in the "mandatory" column from "Measured value of body weight (0xE0)" to "○". |

- Changed "electric cooker class" to "cooking heater class" to add detailed requirements.
- Published for consortium members only.

| | |
|---|---|
| Ver.3.41 Release A | • Published for consortium members only. |
| Ver.3.41 Release B | • Added detailed requirements for "bathroom heater and dryer class".<br>• Added a description for manufacturer's original codes to Chapter 1.<br>• Published for consortium members only. |
| Ver.3.2 Release A | • Published for general public |
| Ver.3.42 Release A | • Published for consortium members only. |
| Ver.3.42 Release B | • Property name: corrected according to the "Guide for giving a property name".<br>• Corrected clerical errors:<br>• Added audiovisual-related device class group 1.7, while adding display and TV objects as |



© 2000 - 2023 ECHONET Consortium

| | |
|---|---|
| | detailed description of the group.<br>・ Published for consortium members only. |
| Ver.3.50 Draft | ・ Published for consortium members only. |
| Ver.3.50 | ・ Published for consortium members only. |
| Ver.3.51 Draft | ・ Published for consortium members only. |
| Ver.3.60 | ・ Published for consortium members only.<br>・ Published for general public |
| Release A | ・ Described that the document supports the ECHONET version 4.0 and ECHONET Lite version 1.0.<br>・ Added requirements for the "device object super class". Deleted all properties for the "device object super class" described in device objects, unless they have different definitions.<br>・ Changed name of the "electric water heater using midnight power service class" to "electric water heater class" and reviewed its property.<br>・ Reviewed property of the "household solar power generation class".<br>・ Added detailed requirements for the "fuel cell class".<br>・ Added detailed requirements for the "storage battery class".<br>・ Added detailed requirements for the "power distribution board metering class".<br>・ Added detailed requirements for the "smart electric energy meter class".<br>・ Added detailed requirements for the "smart gas meter class".<br>・ Added detailed requirements for the "water flowmeter class".<br>・ Added detailed requirements for the "clothes dryer class".<br>・ Added detailed requirements for the "switch class".<br>・ Added detailed requirements for the "ventilation fan class"<br>・ Reviewed properties for the "illuminance sensor class", "air speed sensor class", "electric energy sensor class", "current sensor class", "water flow rate sensor class", and "open/close sensor class" for the sensor-related class.<br>・ Reviewed properties for the "home air conditioner class" and "air cleaner class" under the air conditioner-related class.<br>・ Reviewed properties for the "general lighting class" under the housing/facilities-related class.<br>・ Reviewed properties for the "washer and dryer class" under the cooking/household-related device class<br>・ Published for consortium members only. |
| Release B draft | ・ Newly defined "number of effective digits for cumulative amount of electric energy" (EPC=0xD7), "cumulative amount of electric energy measured at fixed time (normal direction)" (EPC=0xEA), and "cumulative amount of electric energy measured at fixed time (reverse direction)" (EPC=0xEB) for the "smart electric energy meter class".<br>・ Changed the "meter approval number" property for the "smart electric energy meter class" to any property.<br>・ Added/corrected detailed descriptions for "smart electric energy meter class".<br>・ Newly defined "gas meter reading" (EPC=0xD1) and "cumulative value of used amount of gas |



© 2000 - 2023 ECHONET Consortium

| | |
|---|---|
| | log" (EPC=0xD2) for the "smart gas meter class".<br>・ Changed the "unit for measured cumulative gas consumption" property, "detection of abnormal value in metering data" property, and "center valve shut-off status" property for the "smart gas meter class" from "mandatory" to "optional".<br>・ Added/corrected the detailed descriptions for the "smart gas meter class".<br>・ Newly defined "minimum/maximum charging/discharging electric energy" (0xC8), "minimum/maximum discharging electric energy" (0xC9), "minimum/maximum charging current" (0xCA), "minimum/maximum discharging current" (0xCB), "charging amount setting 1" (0xE7), "discharging amount setting 1" (0xE8), "charging amount setting 2" (0xE9), "discharging amount setting 2" (0xEA), "charging electric energy setting" (0xEB), "discharging electric energy setting" (0xEC), "charging current setting" (0xED), and "discharging current setting" (0xEE) for the "storage battery class".<br>・ Added "other" to the "operation mode" property values for the "storage battery class".<br>・ Added/corrected detailed descriptions for the "storage battery class".<br>・ Changed property names of the "storage battery class", "smart electric energy meter class", and "smart gas meter class" according to the ECHONET Property Naming Rules.<br>・ Newly defined electric vehicle charge/discharge system class.<br>・ Changed EPC of water flow classification for the "water flowmeter class" to "0xD0" and owner classification to "0xD1".<br>・ Changed the access rule of the identification number property to "Get" only.<br>・ Corrected errata.<br>・ Published for consortium members only. |
| Release B | ・ Clearly stated that the communication definition object is not supported, since it is not defined for ECHONET Lite.<br>・ Corrected table numbers to make them consistent with the chapter structure.<br>・ Corrected the remarks of the super class to make them consistent with the remark numbers under of the table (previously, they were indicated as "*").<br>・ Corrected the "cumulative amount of electric energy (normal direction)=0x0001E240 (001234546)" in the detailed descriptions of cumulative amount of electric energy measured at fixed time (normal direction) property of the "smart electric energy meter class" to "cumulative amount of electric energy (normal direction)=0x0001E240 "00123456".<br>・ Corrected the "cumulative amount of electric energy (reverse direction)=0x0001E240 (001234546)" in the detailed descriptions of cumulative amount of electric energy measured at fixed time (reverse direction) property of the "smart electric energy meter class" to "cumulative amount of electric energy (reverse direction)=0x0001E240 "00123456".<br>・ Corrected "0x32: Private sector company" in the owner classification of the "smart electric energy meter class" to "0x32: Other than electric power company".<br>・ Corrected "type of the power being metered in the form of meter" of "type of the "smart electric energy meter class" to "type of the power supplied to the meter".<br>・ Clearly stated how to deal with the date of the verification of the meter will expire smart electric energy meter class. |



© 2000 - 2023 ECHONET Consortium

| | |
|---|---|
| | • Corrected rate of the composite transformation ratio for smart electric energy meters from "250A/5A current transformer" to "200A/5A current transformer".<br>• Corrected the unit of the cumulative amount of electric energy measured of the "electric energy sensor class" from "Wh" to "kWh".<br>• Corrected the value range of "measured air temperature property" for the "temperature sensor class" from 0x7FFF to 0x7FFE.<br>• Changed "electric water heater using midnight power service class" in the detailed descriptions of the "electric water heater class" to the "electric water heater class".<br>• When APPENDIX Release is A for the description of standard version information of the super class, the first and second bytes shall be 0x00, the third byte 0x61, and the fourth byte 0x00.<br>• Corrected overflow code of measured instantaneous gas consumption power for the "fuel cell class" from "ox" to "0x".<br>• Added missing detailed descriptions of the "water heating temperature setting property" for the "fuel cell class". |
| Release C Draft | • Added "0x40: other" to light color setting of the general lighting class. Newly defined 0xB5 for "maximum value of settable level for night lighting", 0xB6 for "lighting mode setting", 0xB7 for "illuminance level setting for main lighting", 0xB8 for "illuminance level step setting for main lighting", 0xB9 for "illuminance level setting for night lighting", 0xBA for "illuminance level step setting for night lighting", 0xBB for "light color setting for main lighting", 0xBC for "light color level step setting for main lighting", 0xBD for "light color setting for night lighting", 0xBE for "light color level step setting for night lighting", and 0xBF for "lighting mode status in auto mode". When the requirements were added, corrected the maximum value of settable level to "used to acquire the maximum specifiable illuminance level value and the maximum specifiable light color value of main lighting". Then corrected the detailed descriptions of the previous property accordingly.<br>• Added a description related to the value to be read to the detailed descriptions of "current limit setting" and "power limit setting" properties for the super class.<br>• Added rated power generation output (independent) to the household solar power generation class. Added a description of "when the system is interconnected" to the existing definition of rated power generation output.<br>• Changed the color of the figure for (22) Air flow direction (horizontal) setting in the detailed descriptions of "home air conditioner class" to a black and white.<br>• Changed the color of the figure for (14) Air flow direction (vertical) setting in the detailed descriptions of the package-type commercial air conditioner (indoor unit) to a black and white.<br>• Defined "minimum/maximum charging electric energy (independent)" (0xDC), "minimum/maximum discharging electric energy (independent)" (0xDD), "minimum/maximum charging current value (independent)" (0xDE), "minimum/maximum discharging current value (independent)" (0xDF), "rated voltage (independent)" (0xEF) for the "storage battery class". Then corrected descriptions for "minimum/maximum charging electric energy", "minimum/maximum discharging electric energy", "minimum/maximum charging current value", "minimum/maximum discharging current value", and "rated voltage" accordingly. |



© 2000 - 2023 ECHONET Consortium

| | |
|---|---|
| | • Added a figure indicating measured parts to the "storage battery class".<br>• Newly defined "alarm activation property (0xC2)" to the electric water heater class.<br>• Newly added "engine cogeneration class".<br>• Deleted "automatic water temperature control setting" property, "water heater status" property, "water heating temperature setting" property, "bath reheating operation" property, "temperature of supplied water setting" property, "bath water temperature setting" property, "bath water volume setting" property, "automatic bath water heating mode setting" property, "bath hot water addition function setting" property, "lukewarm water temperature lowering function setting" property, "bath hot water volume setting 2" property, "bath hot water volume setting 3" property, "ON timer reservation setting" property, and "ON timer reservation setting" property from the "fuel cell class".<br>• Added "measured in-house instantaneous power consumption" property, "measured in-house cumulative power consumption" property, "in-house cumulative power consumption reset" property, "power generation status" property to the "fuel cell class".<br>• Changed the access rule of the "power generation operation setting" property for the "fuel cell class" to "Set" only.<br>• Corrected the detailed descriptions of "rated power generation" property and "measured instantaneous amount of electricity generated" property for the "fuel cell class" from "oxFFFF" to "0xFFFF".<br>• Annex 1 Clearly stated the number of second and succeeding bytes for property map description format.<br>• Corrected the missing link in Section 3.6 Secure communication shared key setup node.<br>• Ensured consistency by using "independent" only in the description of property related to system interconnection, that previously had both "independent" and "autonomous".<br>• Corrected announcement at status change of operation status property for the "bathroom heater and dryer" and "cooking heater" classes to mandatory.<br>• Deleted power-saving operation setting from the "electric toilet seat class".<br>• Published for consortium members only. |



© 2000 - 2023 ECHONET Consortium

| | |
|---|---|
| Release C | • Corrected notation variability in the access rules as a whole.<br>• Added a description of symbols (e.g. "○") to all figures.<br>• Corrected descriptions in the standard version information for the "device object super class", corrected notation variability in the access rule, misprints in the detailed descriptions for the "cumulative operating time" property, and added a description in the detailed description to avoid misinterpretation to measured instantaneous power consumption and measured cumulative power consumption.<br>• Changed measured in-house cumulative power consumption of the "fuel cell class" to "not mandatory". Corrected the number of digits for 0x0 of the value range to the appropriate one. Corrected misprints in the description of "power generation setting" (indicated in the table). Corrected misprints in the description of "measured remaining hot water amount" and "tank capacity".<br>• Corrected misprints in the description of "cumulative flow rate" of the water flow meter class.<br>• Corrected misprints in the description of connected devices of the switch class.<br>• Corrected misprints in the description of "bath hot water volume setting 1", "bath hot water volume setting 2", and "bath hot water volume setting 3" of the instantaneous water heater class.<br>• Corrected misprints in the description of "dryer operation setting" and "room temperature measurement" of bathroom heater and dryer class.<br>• Added notes to avoid misinterpretation to the detailed descriptions of the "charging/discharging amount setting 1 and 2", "charging amount setting 1 and 2", and "discharging amount setting 1 and 2" for the "storage battery class".<br>• Added notes to avoid misinterpretation to the detailed descriptions of the "charging amount setting 1 and 2" and "discharging amount setting 1 and 2" for the "electric vehicle charge/discharge system class".<br>• Corrected notation variability in the access rules for the "smart gas meter class". Added an access rule "Get" to the historical information of cumulative gas consumption.<br>• Newly defined RGB setting when in colored lighting mode (0xC0) to the general lighting class. Added colored lighting mode (0x45) as a lighting mode, at the time of new establishment.<br>• Newly added "bath hot water volume setting 4" property and "bath hot water volume setting 4 – maximum settable level" to the "electric water heater class" and "instantaneous water heater" class.<br>• Contained the position information property which was previously defined as EPC=0x93 for the "super class" to the "installation location property (EPC=0x81)", and newly defined the EPC=0x93 as a remote control property. |



© 2000 - 2023 ECHONET Consortium

| | |
|---|---|
| Release D Draft | • Corrected the access rule of the "power generation operation setting" property for the "fuel cell class" and "engine cogeneration class" to "Set//Get".<br>• Changed property names of the "0xE2: smart electric energy meter class", "0xE4: cumulative amount of electric energy measurement log (normal direction)", "0xE4: cumulative amount of electric energy measurement log (reverse direction)", "0xE5: day on which the historical data of measured cumulative amount of electric energy" to "0xE2: cumulative amount of electric energy measurement log 1 (normal direction)", "0xE4: cumulative amount of electric energy measurement log 1 (reverse direction)", "0xE5: day on which the historical data of measured cumulative amount of electric energy 1" respectively.<br>• Corrected a description in "0xE2: cumulative amount of electric energy measurement log (normal direction)" and "0xE4: cumulative amount of electric energy measurement log (reverse direction)" for the "smart electric energy meter class". Then clarified data starting time.<br>• Added "historical data of measured cumulative amount of electric energy 2 (normal and reverse directions)" property and "day on which the historical data of measured cumulative amount of electric energy is to be retrieved 2" property to the "smart electric energy meter class".<br>• Added "0xB4: manual water heating stop days setting" property, "0xB5: relative time setting value for manual water heating" property, "0xB6: tank operation mode setting" property, "0xC3: hot water supply status" property, "0xC4: relative time setting for keeping bath temperature" property, "0xE9: bathroom priority setting" property, "0xEA: bath operation status monitor" property, "0xE4: manual bath reheating operation setting" property to the "electric water heater class".<br>• Changed property names of the "0xE5: bath hot water addition function setting" and "0xE6: lukewarm water temperature lowering function setting" for the "electric water heater class" to "0xE5: manual bath hot water addition function setting" and "0xE6: manual Lukewarm water temperature lowering function setting" respectively.<br>• Changed name from "electrically operated blind class" to "electrically operated blind/shade class", and "0x89: fault description", "0x90: timer operation setting", and "0xC1: Sunlight detection status.<br>• "0xC2: wind detection status", "0xD0: opening (extension) speed setting",<br>"0xD1: closing (retraction) speed setting", "0xD2: operation time setting value", and "0xD4: automatic operation setting"<br>"0xE5: electric lock setting", "0xE8: remote control setting",<br>"0xE9: selective opening (extension) level operation setting"<br>"0xEA: open/close (extension/retraction) status", 0xEE: one-time opening (extension) speed setting"<br>Added "0xEF: one-time closing (retraction) speed setting" property.<br>In the existing properties,<br>Changed class name in the detailed description of the "0x80: operation status"<br>Changed the "0xE0: open/close setting" to "0xE0: open/close (extension/retraction) operation setting" and added a range for stopping to the property description.<br>Changed property of the "0xE1: degree-of-opening level" from 8-step setting to 0-100% setting. |



© 2000 - 2023 ECHONET Consortium

| | |
|---|---|
| | Added to the detailed descriptions of the "0xE2: shade angle setting" property.<br>Changed the name of the "0xE3: open/close speed setting" to "0xE3: open/close (extension/retraction) speed setting", and changed a detailed description of the property.<br>Added following items to the "electrically operated shutter class":<br>"0x89: fault description", "0x90: timer operation setting", and "0xD0: opening speed setting", "0xD1: closing speed setting", "0xD2: operation time setting value", and "0xE8: remote control setting",<br>"0xE9: selective opening (extension) operation setting property", "0xEA: open/close status", "0xED: slit opening setting" and "0xEE: one-time opening speed setting",<br>and "0xEF: one-time closing speed setting".<br>In the existing properties,<br>・ Changed class name in the detailed description of the "0x80: operation status"<br>Changed property name from the "0xE0: open/close setting 1" to "0xE0: open/close operation setting" and further changed detailed description accordingly.<br>Changed property name from the "0xE1: degree-of-opening level 1" to "0xE1: degree-of-opening level" and further changed from 8-step setting to 0-100％ setting.<br>Deleted properties for the "0xE4: degree-of-opening level".<br>Deleted clerical errors in value range of "0xE5: electric lock setting", permission=0x41, and prohibition=0x42.<br>Deleted properties for the "0xE7: open/close setting 2".<br>・ Changed name from "electrically operated rain sliding door class" to "electrically operated rain sliding door/shutter class", and added following items:<br>・ "0x89: fault description", "0x90: timer operation setting", and "0xD0: opening speed setting",<br>・ "0xD1: closing speed setting", "0xD2: operation time setting value", and "0xE8: remote control setting",<br>・ "0xE9: selective opening (extension) operation setting property", "0xEA: open/close status",<br>・ "0xED: slit opening setting" and "0xEE: one-time opening speed setting",<br>・ and "0xEF: one-time closing speed setting".<br>・ In the existing properties,<br>・ Changed class name in the detailed description of the "0x80: operation status".<br>・ Changed property name from the "0xE0: open/close setting 1" to "0xE0: open/close operation setting" and further changed detailed description accordingly.<br>・ Changed property name from the "0xE1: degree-of-opening level 1" to "0xE1: degree-of-opening level" and further changed from 8-step setting to 0-100% setting.<br>・ Deleted properties for the "0xE4: degree-of-opening level".<br>・ Deleted clerical errors in value range of "0xE5: electric lock setting", permission=0x41, and prohibition=0x42.<br>・ Deleted properties for the "0xE7: open/close setting 2".<br>・ Changed name from "electric cooker class" to "electrically operated gate class" to add detailed requirements.<br>・ Changed name from "electrically operated skylight class" to "electrically operated window class" |



© 2000 - 2023 ECHONET Consortium

| | |
|---|---|
| | and added detailed requirements.<br>・ Integrated sunblind and shade class (0x66) into the powered window shades and shade class.<br>・ Added automatically operated entrance door/sliding door class to the class code 0x66. (detailed requirements are included)<br>・ Added "0xE7: battery level" property to the "electric lock class".<br>・ Added automatic (0x46) to the "0xDA: operation mode setting" property of the storage battery class.<br>・ Added the access rule "Get" to the "0xCE: thermostat setting override function" property for the "home air conditioner class".<br>・ Changed the name of the "electric vehicle charge/discharge system" class to "electric vehicle charger/discharger class", and<br>・ Changed property names of the "0xC0: V2Huseable capacity 1", "0xC1: V2H Usable capacity 2", "0xC2: V2Husable capacity 1", "0xC3: V2H Remaining usable capacity 2", "0xC4: V2H Remaining usable capacity 3", "0xC7: chargeable/dischargeable status", "0xD0: Used capacity 1", "0xD1: used capacity 2", "0xE2: remaining stored electricity1", "0xE3: remaining stored electricity2", and "0xE4: remaining stored electricity 3" to "0xC0: dischargeable capacity of vehicle mounted battery 1", "0xC1: dischargeable capacity of vehicle mounted battery 2", "0xC2: remaining dischargeable capacity of vehicle mounted battery 1", "0xC3: remaining dischargeable capacity of vehicle mounted battery 2", "0xC4: remaining dischargeable capacity of vehicle mounted battery 3", "0xC7: vehicle connection and chargeable/dischargeable status", "0xD0: used capacity of vehicle mounted battery 1", "0xD1: used capacity of vehicle mounted battery 2", "0xE2: remaining stored electricity 1", "0xE3: remaining stored electricity of vehicle mounted battery 2", and "0xE4: remaining stored electricity of vehicle mounted battery 3".<br>・ Added "vehicle not connected" (0x30) to the "0xC7: vehicle connection and chargeable status" property values.<br>・ Corrected detailed requirements of the "0xC5: rated charge capacity" property, "0xC6: rated discharge capacity" property, "0xC8: minimum/maximum charging electric energy" property, "0xC9: minimum/maximum discharging electric energy" property, "0xCA: minimum/maximum charging current value" property, "0xCB: minimum/maximum discharging current value" property, "0xD2: rated voltage" property, and "0xDB: system interconnection status" property.<br>・ Deleted "0xE5: battery state of health" property, "0xE8: discharging amount setting 1" property, and "0xEA: discharging amount setting 2" property.<br>・ Added "0xEF: rated power generation output (independent)" property.<br>・ Changed "Get" of "0xC8: minimum/maximum charging electric energy" property, "0xC9: minimum/maximum discharging electric energy" property, "0xCA: minimum/maximum discharging current value" property, and "0xCB: minimum/maximum discharging current value" property.<br>・ Corrected remarks of *1 through *5 and descriptions.<br>・ Changed "Set/Get" of "0xD7: measured cumulative discharging electric energy reset setting" property and "0xD9: measured cumulative charging electric energy reset setting" property to "Set" only. |



© 2000 - 2023 ECHONET Consortium

| | |
|---|---|
| | • Clearly stated whether electric vehicle charging/discharging device or a vehicle to be connected (battery) shall be subjected in the detailed requirements for properties. Then changed related detailed descriptions.<br>• Published for consortium members only. |
| Release D | • Corrected the "day on which the historical data of measured cumulative amount of electric energy 1" in the description in "0xE2: cumulative amount of electric energy measurement log (normal direction)" and "0xE4: cumulative amount of electric energy measurement log (reverse direction)" for the "smart electric energy meter class" to Byte 2, as initially specified.<br>• Added number of collection segments to the smart electric energy meter class ("historical data of measured cumulative amount of electric energy 2 (normal and reverse directions)" property).<br>• Added "0x8F: power-saving operation setting" to the home air conditioner class. Changed "0xBB: measured value of room temperature" from optional to mandatory. Changed "0xA0: air flow rate setting" and announcement at status change from optional to mandatory.<br>• Changed "0xC0: daytime reheating permission setting" for the "electric water heater class" from optional to mandatory. Changed "0xC3: hot water supply status" and announcement at status change from optional to mandatory. Deleted a description related to the cancellation request signal in the detailed descriptions of "0xC2: alarm activation". Changed "low" and "high" of power consumption to "small" and "large" in the detailed descriptions of "0xB6: tank operation mode setting".<br>• The detailed description of the "0xCB: Power generation status" of the "engine cogeneration class" said "This property indicates power generation status of power generation operation status of engines". Corrected the description to "This property indicates power generation status of engine cogeneration".<br>• Added a description of property value range to the detailed description of the "0xC7: measured instantaneous gas consumption" for the "fuel cell class".<br>• Changed EPC value in the "sunlight detection status" of the "electrically operated blind/shade class" from 0xC2 to 0xC3.<br>• In the detailed descriptions of the "operation status property", deleted a description of "When the property is OFF (0x31), values obtained from the other properties shall not be guaranteed, unless they are otherwise specified in this standard", since the property to be guaranteed has already described in the detailed descriptions for the applicable property. |



© 2000 - 2023 ECHONET Consortium

| | |
|---|---|
| | • The detailed description for the operation status property of the "electric water heater class" and "household solar power generation class" indicates whether the functions specific to each class are operating (ON) or not (OFF). Corrected a description of "In the node mounting this class, if the function of this class is started concurrently with the start of node operation, this property may be implemented at a fixed value of 0x30 (Operation status ON)".<br>• Reviewed the definition of conditionally required property.<br>• Added missing "0x82: standard version information" to the example of property description format (1).<br>• Added "0xCF: operating status" property to the "storage battery class". |
| Release E Draft | • Newly added audio class to the audiovisual-related device class group.<br>• Newly added electric storage heater class to the air conditioner-related device class group.<br>• Newly added following properties to the "power distribution board metering class".<br>• "0xB0: master rated capacity", "0xB1: number of measurement channels (simplex)", "0xB2: channel range specification for cumulative amount of electric energy measurement (simplex)", "0xB3: cumulative amount of electric energy measured list (simplex)", "0xB4: channel range specification for instantaneous current measurement (simplex)", "0xB5: measured instantaneous current list (simplex)", "0xB6: channel range specification for instantaneous power consumption measurement (simplex)", "0xB7: measured instantaneous amount of electric energy list (simplex)", "0xB8: number of measurement channels (duplex)", "0xB9: channel range specification for cumulative amount of electric energy measurement (duplex)", "0xBA: cumulative amount of electric energy measured list (duplex)", "0xBB: channel range specification for instantaneous current measurement (duplex)", "0xBC: measured instantaneous current list (duplex)", "0xBD: channel range specification for instantaneous power consumption measurement (duplex)", and "0xBE: measured instantaneous amount of electric energy list (duplex)"<br>• Corrected values for overflow and underflow codes for measured air temperature property of the "temperature sensor class", since the values were mistakenly crossed with ECHONET and ECHONET Lite standards.<br>• Corrected words related to "alarm for out of hot water" stated in the detailed description of alarm status of the corrected "electric water heater class".<br>• Added following words to the detailed description of the "bath water temperature setting property" for the "electric water heater class".<br>• "This property can double as a property for the bath heat keeping temperature when bath automatic mode is implemented in a water heater."<br>• Added following words to the detailed description of the "automatic bath water heating mode setting property" for the "electric water heater class".<br>• "Because of specification differences between water heaters, the definition of bath automatic operation mode shall depend on the implementation." In general, the mode refers to a series of operations of "supplying hot water, adding hot water, reheating, and keeping bath temperature" or "unplugging (draining), washing, plugging, supplying hot water, adding hot water, reheating, and keeping bath temperature." |



© 2000 - 2023 ECHONET Consortium

| | |
|---|---|
| | • Changed the access rule of the "bathroom priority setting property" for the "instantaneous water heater class" to "Get" only, similar to the "electric water heater class".<br>• Added "bath operation status monitoring property" to the "instantaneous water heater class".<br>• Deleted following words stated in the detailed description of operation status properties for the "electrically operated blind/shade class", "electrically operated shutter class", "electrically operated rain sliding door/shutter class", "electrically operated gate class", "electrically operated window class", "automatically operated entrance door/sliding door class", and "electric lock class".<br>• "When the property is OFF (0x31), values obtained from the other properties shall not be guaranteed, unless they are otherwise specified in this standard."<br>• Corrected clerical errors in the detailed description of operation time setting properties for the "electrically operated blind/shade class", "electrically operated window class", "electrically operated shutter class", "electrically operated rain sliding door/shutter class", "electrically operated gate class", and "automatically operated entrance door/sliding door class".<br>• Added a description for definitions of normal/reverse direction for the "power distribution board metering class".<br>• Corrected clerical errors in detailed descriptions of the "historical data of measured cumulative amount of electric energy 2 (normal and reverse directions) property" of the "smart electric energy meter class".<br>• Clearly stated that the input source is built into the equipment in the detailed descriptions of the "input source setting property" for the "audio class".<br>• Published for consortium members only. |
| Release E | • Corrected font size and shifted ruled lines in the property list for the "combination microwave oven (electronic oven) class".<br>• Corrected errata in the first part of the detailed descriptions of the "instantaneous water heater class" requirements and "water heater status property".<br>• Corrected clerical errors in detailed descriptions of the "one-time opening speed setting" property and "one-time closing speed setting" property for the "electrically operated blind/shade class", "electrically operated shutter class", "electrically operated rain sliding door/shutter class", "electrically operated gate class", "electrically operated window class", and "automatically operated entrance door/sliding door class".<br>• Corrected errata in the "power distribution board metering class".<br>• Clearly stated that the normal direction shall be handled as positive value, while the reverse direction shall be handled as negative value for measured instantaneous power consumption and measured instantaneous currents for the "power distribution board metering class".<br>• Clearly stated initial values of the simplex/duplex properties of the "cumulative amount of electric energy measured list", "measured instantaneous currents list", and "measured instantaneous amount of electric energy list" for the "power distribution board metering class".<br>• Corrected the property values of the "value range of number of measured channels (simplex)" property and "number of measured channels (duplex)" property for the "power distribution board metering class" to 0x01-0xFC (1-252), to indicate the number of measured channels. |



© 2000 - 2023 ECHONET Consortium

| | |
|---|---|
| | • Corrected errata in the "electric storage heater class".<br>• Used current briefing provided by electric power companies as reference for "setting value for midnight power energizing time" and "setting value for midnight power starting time" for the "electric storage heater class".<br>• Changed property name of the "model judgment" property for the "electric storage heater class" to "radiation method".<br>• Corrected clerical errors in lower limit of measured stored heat temperature of the "measured stored heat temperature" for the "electric storage heater class" to 0xFF38.<br>• Corrected errata in the "audio class".<br>• Entered a relationship and examples of "mute setting" property and "volume setting" property to the "audio class".<br>• Corrected description of property values for the "input source setting", when "operation status" property of the audio class turned off. Then, added an example accordingly. |
| Release F Draft | • Newly added following properties to the "electric water heater class".<br>• "0xD6: volume setting" property, "0xD7: mute setting" property", "0xD8: remaining hot water volume" property"<br>• Added an overview of the class to the "electric water heater class".<br>• Newly added following properties to the "instantaneous water heater class".<br>• "0xD6: volume setting" property, "0xD7: mute setting" property<br>• Added "keeping temperature (0x43)" to the "0xE2: bath water heater status" property of the "instantaneous water heater class".<br>• Newly added "air pressure sensor class".<br>• Newly added "high-voltage smart electric energy meter class".<br>• Added "group information" property to the "package-type commercial air conditioner (indoor unit) class" and "package-type commercial air conditioner (outdoor unit) class".<br>• Newly established properties for the "commercial showcase class" and "commercial showcase outdoor unit class".<br>• Changed the name from "smart electric energy meter class" to "low-voltage smart electric energy meter class".<br>• Deleted the "power type, owner type" property, "phase and wire setting status, ratio of composite transformation ratio" property, "meter approval number" property, "month and year in which the verification of the meter will expire" property, and "measured instantaneous currents" property from the "low-voltage smart electric energy meter class".<br>• Corrected property name, property description, and detailed descriptions of ratio of composite transformation ratio for the "low-voltage smart electric energy meter class" to coefficient.<br>• Changed "cumulative amount of electric energy measured (normal direction)" property, "cumulative amount of electric energy measurement log 1 (normal direction)" property, "day on which the historical data of measured cumulative amount of electric energy 1" property, "measured instantaneous amount of electric energy, measured instantaneous currents" property, and "cumulative amount of electric energy measured at fixed time (normal direction)" property |



© 2000 - 2023 ECHONET Consortium

| | |
|---|---|
| | for the "low-voltage smart electric energy meter class" from optional to mandatory.<br>・ Changed "cumulative amount of electric energy measured (reverse direction)" property, "cumulative amount of electric energy measurement log 1 (reverse direction)" property, and "cumulative amount of electric energy measured at fixed time (reverse direction)" property for the "low-voltage smart electric energy meter class" from optional to mandatory with conditions attached.<br>・ Corrected wording in the property descriptions and detailed descriptions of the "cumulative amount of electric energy measured (normal direction)", "cumulative amount of electric energy measurement log 1 (normal direction)", "day on which the historical data of measured cumulative amount of electric energy 1", "measured instantaneous amount of electric energy, measured instantaneous currents", "cumulative amount of electric energy measured at fixed time (normal direction)", "cumulative amount of electric energy measured (reverse direction)", "cumulative amount of electric energy measurement log 1 (reverse direction)", "cumulative amount of electric energy measured at fixed time (reverse direction)", and "cumulative amount of electric energy measurement log 2 (normal direction, reverse direction)" for the "low-voltage smart electric energy meter class".<br>・ Corrected data type of "cumulative amount of electric energy measured at fixed time (normal direction)" and "cumulative amount of electric energy measured at fixed time (reverse direction)" for the "low-voltage smart electric energy meter class".<br>・ Newly added "network camera class".<br>・ Corrected clerical errors in Section 2.22 "Power limit setting property".<br>・ Newly added "mono functional lighting class".<br>・ Corrected clerical errors in the values of the "Byte 2 Range from the acquisition start channel" in the detailed descriptions for channel range specification for the "instantaneous current measurement (duplex)", "measured instantaneous current list (duplex)", and "measured instantaneous amount of electric energy list (duplex) property" for the "power distribution board metering class".<br>・ Published for consortium members only. |
| Release F | ・ Added "exceptional status" property to the "commercial showcase outdoor unit class", to determine if the case is defrosted.<br>・ As a result of member review of the deleted Release F, deleted the "keeping temperature (0x43)" and an announcement at status change from the "0xE2: bath water heater status" property for the "instantaneous water heater class".<br>・ Added "unit of cumulative maximum electric power demand" property to the "high-voltage smart electric energy meter class". |
| Release G Draft | ・ Corrected description of the "bath water heater status property" of the "instantaneous water heater class".<br>・ Corrected wording in the detailed descriptions of the "operating status" property and "operation mode setting" property for the "storage battery class".<br>・ Added detailed descriptions of the "rated capacity" property, "operation mode setting" property, "remaining stored electricity 1" property, "remaining stored electricity 2" property, and "remaining stored electricity 3" property for the "storage battery class". |



© 2000 - 2023 ECHONET Consortium

| | |
|---|---|
| | • Newly added following properties to the "cold or hot water heat source equipment class". "0x84: measured instantaneous power consumption" property, "0x85: measured cumulative power consumption" property, "0xE9: rated power consumption" property, and "0xEA: power consumption measurement method" property.<br>• Newly added following properties to the "floor heater class". "0x84: measured instantaneous power consumption" property, "0x85: measured cumulative power consumption" property, "0xE9: rated power consumption" property, and "0xEA: power consumption measurement method" property.<br>• Added detailed descriptions of the "zone change setting property" for the "floor heater class".<br>• Changed "dischargeable capacity of vehicle mounted battery 2" property, "remaining dischargeable capacity of vehicle mounted battery 2" property, "used capacity of vehicle mounted battery 2" property, and "remaining stored electricity of vehicle mounted battery 2" property for the "electric vehicle charger/discharger class" from mandatory to optional.<br>• Added "undetermined" to the value of the "vehicle connection and chargeable/dischargeable status property" for the "electric vehicle charger/discharger class".<br>• Added "charger/discharger type" property and "vehicle connection confirmation property" to the "electric vehicle charger/discharger class".<br>• Reviewed the property values of operation mode setting of the "electric vehicle charger/discharger class".<br>• Newly added "electric vehicle charger class".<br>• Added detailed requirements for "controller class".<br>• Newly added "DR event controller class".<br>• Corrected descriptions of value range of the property list of the "cumulative amount of electric energy measurement log 1 (normal direction)", "cumulative amount of electric energy measurement log 1 (reverse direction)", "cumulative amount of electric energy measured at fixed time (normal direction)", and "cumulative amount of electric energy measured at fixed time (reverse direction)" for the "low-voltage smart electric energy meter class".<br>• Added a compliment to the detailed descriptions of cumulative amount of electric energy measurement log 1 (normal direction) and cumulative amount of electric energy measurement log 1 (reverse direction) for the "low-voltage smart electric energy meter class".<br>• Added a compliment to the detailed descriptions of the "historical data of measured cumulative gas consumption property" for the "smart gas meter class".<br>• Corrected description of value range of the property list of the "historical data of measured cumulative amount of active electric energy", "historical data of measured electric power demand", and "measurement data of reactive electric power consumption (lag) for power factor measurement" for the "high-voltage smart electric energy meter class".<br>• Added a compliment to the detailed descriptions of historical data of measured cumulative amount of active electric energy, historical data of measured electric power demand, and measurement data of reactive electric power consumption (lag) for power factor measurement for the "high-voltage smart electric energy meter class".<br>• Published for consortium members only. |



© 2000 - 2023 ECHONET Consortium

| | |
|---|---|
| Release G | • Corrected detailed descriptions of the "power-saving operation setting property" for the "home air conditioner class".<br>• Corrected description, value range, data type, and size of the "rated power consumption" property for the "cold or hot water heat source equipment class".<br>• Partially added descriptions to the detailed description of the "power consumption measurement method" property for the "cold or hot water heat source equipment class".<br>• Partially added descriptions to the detailed description of the "power consumption measurement method" property for the "floor heater class".<br>• Added a concept of data retention to the "controller class".<br>• Corrected additional description related to a link with systems other than ECHONET Lite domain to the "controller class".<br>• Added a description that the device to be controlled shall be an instance unit for the "index" property for the "controller class". Added a description to recommend use of "Set/Get" for ESV.<br>• Changed data retention of the "name" property for the "controller class" to "recommended".<br>• Added "deletion" to the value range of the "connection status" property for the "corrected controller class".<br>• Corrected the data type of the "number of sprinkles setting property" for the "sprinkler (for garden) class" to "Unsigned char". |
| Release G Revised | • Entered EPC of controlled device registered information renewal version information for "controller class". |
| Release H Draft | • Newly added "kerosene meter class", "smart kerosene meter class", "household small wind turbine power generation class", and "parallel processing combination-type power control class".<br>• Added 0x61 and 0x62 indicating a status of the communication line to the property value of the "remote control operation property (EPC=0x93)" for the "super class".<br>• Added surplus electric energy prediction value to the "electric water heater class".<br>• Added "buzzer" property to the "home air conditioner class".<br>• Added various properties (identification number, current time setting, current date setting, AC effective capacity (charging), AC effective capacity (discharging), AC chargeable capacity, AC dischargeable capacity, AC chargeable amount, AC dischargeable amount, AC charge upper limit setting, AC discharge lower limit setting, AC measured cumulative amount of charging electric energy, AC measured cumulative amount of discharging electric energy, AC charge amount setting value, AC discharge amount setting value, re-interconnection permission setting, operation permission setting, autonomous operation permission setting, AC rated electric energy) to the "storage battery class".<br>• Added property values to the "operating status" property and "operation mode setting" property for the "storage battery class".<br>• Changed "minimum/maximum charging electric energy property", "minimum/maximum discharging electric energy property", and" system interconnection status property" for the "storage battery class" from optional to mandatory.<br>• Published for consortium members only. |



© 2000 - 2023 ECHONET Consortium

| | |
|---|---|
| Release H | • Partially added a description of the "remote control setting property".<br>• Changed "bathroom pre-warmer operation setting property" for the "bathroom heater and dryer class" to optional.<br>• Designated an announcement at status change for the "AC charge amount setting value" and "AC discharge amount setting value" using a property table for the "storage battery class".<br>• Partially changed descriptions of the "AC measured cumulative amount of charging electric energy" property, "AC charge amount setting value", "AC discharge amount setting value" property, "minimum/maximum discharging current value (independent)" property, "charging/discharging amount setting 1" property, "charging/discharging amount setting 2" property, "charging amount setting 1" property, "discharging amount setting 1" property, "charging amount setting 2" property, and "discharging amount setting 2" property for the "storage battery class".<br>• Changed "Get" in the "Braking Status" for the "household small wind turbine power generation class" class from optional to mandatory. Then added detailed descriptions. |
| Release I Draft | • Newly added "lighting system class", "package-type commercial air conditioner (indoor unit) (except those for facilities)", and "package-type commercial air conditioner (outdoor unit) (except those for facilities) class".<br>• Added "SI value property", "SI value resetting property", "collapse occurrence status property", and "collapse occurrence status resetting property" to the "earthquake sensor class".<br>• Added a description of "0 when not charging" or "0 when not discharging" to the detailed descriptions of (31), (32), (33), and (35) for the "electric vehicle charger/discharger class".<br>• Corrected sample values of "multiplying factor for coefficient" described in the detailed descriptions of (3), (6), (7), (8), (12), (13), (14), (19), and (20) for the "high-voltage smart electric energy meter class" from 0x01 (1) to 0x00 (1).<br>• Added "showcase type information property", "door type information property", "showcase configuration information property", "type of lighting inside the case property", "type of lighting outside the case property", "illuminance level setting of lighting inside the showcase property", "illuminance level setting of lighting outside the showcase property", "temperature setting of inside the case property", "showcase shape information property", and "temperature range information for inside the case property" to the "commercial showcase class".<br>• Clarified the definition of the "group information property" for the "commercial showcase class", and changed the access rule "Get" installation level to "mandatory".<br>• Deleted "draining" of a value range of the "operation mode property" from the "commercial showcase class".<br>• Clarified the definition of the "group information property" for the "commercial showcase (outdoor unit) class", and changed the access rule "Get" installation level to "mandatory".<br>• Changed installation level of chamber temperature setting of the commercial showcase class to "mandatory".<br>• Added "0x43: no lighting" to the value range of the "type of lighting inside the showcase property" and "type of lighting outside the showcase property" for the "commercial showcase class". |



© 2000 - 2023 ECHONET Consortium

| | |
|---|---|
| | • Added notes 2 and 3 to "electric water heater class". Added "participation in energy shift property", "standard time to start heating 1 property", "number of energy shifts property", "daytime heating shift time 1 property", "expected electric energy at daytime heating shift time 1 property", "consumption of electric energy per hour 1 property", "consumption of electric energy per hour 1 property", "daytime heating shift time 2 property", "expected electric energy at daytime heating shift time 2 property", and "consumption of electric energy per hour 2 property".<br>• Added "place to install device to be controlled property", "fault status of device to be controlled", "address of installation location", "Set property map for device to be controlled", "Get property map for device to be controlled" to the "controller class".<br>• Changed "controlled device" to "device to be controlled" within the "controller class".<br>• Corrected clerical errors in the detailed descriptions of a table of the "transmission interval property" for the "parallel processing combination-type power control class".<br>• Published for consortium members only. |
| Release I 2nd Draft | • Added definitions for experimental use and undefined to "manufacturer code" for the "device object super class".<br>• Changed the "water heater status property" for the "electric water heater class" and announcement at status change of the "automatic water heating setting property" from optional to mandatory.<br>• Changed name of the "operation mode property" for the "commercial showcase class" and "commercial showcase outdoor unit class" to the "operation mode setting property".<br>• Deleted a description of "0 when not charging" or "0 when not discharging" from the detailed descriptions of "(31) charging amount setting 1", "(32) charging amount setting 2", "(33) charging electric power setting", "(34) discharging electric power setting", "(35) charging current setting value", and "(36) discharging current setting value" for the "electric vehicle charger/discharger class".<br>• Deleted specifications for conventional package-type commercial air conditioner (0x0145 and 0x0146), since specifications related to the package-type commercial air conditioner was newly established.<br>• Added a description of "When the property value of the actual piece of equipment is higher than the upper limit of the property value range, 0xFFFFFFFF shall be used." In the detailed descriptions of the "(7) Possible power savings for outdoor units" property for the "package-type commercial air conditioner (outdoor unit) (except those for facilities) class".<br>• Deleted a description of "When the property value of the actual piece of equipment is higher than the upper limit of the property value range, 0xFFFFFFFF shall be used." From the detailed descriptions of the "(8) Settings restricting power consumption of outdoor units" property of the "package-type commercial air conditioner (outdoor unit) (except those for facilities) class".<br>• Changed description in the table for the "standard time to start heating 1" property, "daytime heating shift time 1" property, "expected electric energy at daytime heating shift time 1" property, "consumption of electric energy per hour 1" property, "daytime heating shift time 2" property, "expected electric energy at daytime heating shift time 2" property, and "consumption of electric energy per hour 2" property for the "electric water heater class". |



© 2000 - 2023 ECHONET Consortium

| | |
|---|---|
| | • Corrected descriptions in notes 2 and 3 for the "electric water heater class".<br>• Clarified the detailed descriptions of "(39) Participation in energy shift" through "(47) Consumption of electric energy per hour 2" for the "electric water heater class" (no change in specifications).<br>• Corrected the detailed descriptions of the detailed descriptions of the "(2) Coefficiency property" for the "high-voltage smart electric energy meter class" (no change in specifications).<br>**[Followings are the corrections of clerical errors]**<br>• Corrected a range of class group code of Chapter 1 (second line) to "0x00-0x05" through "0x00-0x06".<br>• Added "Ventilation function ON (outlet direction)=0x44" to the value range of the "ventilation function setting property" for the "home air conditioner class" (added to the value range appears in the table according to the detailed descriptions).<br>• Corrected the value of the value range of the "measured value of room temperature property" for the "electric heater class".<br>• Corrected detailed descriptions of "(5) ON timer reservation setting" for the "fan heater class".<br>• Corrected numerical values in the detailed descriptions of "(10) measured stored heat temperature" for the "electric storage heater class" (from 0xFF37 to 0xFF38).<br>• Corrected value range of "water flow meter classification" for the "water flow meter class". Then, corrected property name of the "water flow classification" to "water flow meter classification", to ensure consistency with the detailed descriptions.<br>• Corrected value range of the "measured value of current consumption" property for the "refrigerator class".<br>• Corrected name of the "operation mode property" for the "commercial showcase class" and "commercial showcase outdoor unit class" to "operation mode setting".<br>• Added "0x43: no lighting" to the detailed descriptions of the "type of lighting inside the showcase property" and "type of lighting outside the showcase property" for the "commercial showcase class".<br>• Corrected the value for the "automatic setting" in the value range of the "washing time setting property" for the "washer and dryer class".<br>• Corrected the decimal value in the value range of the "index property" for the "controller class".<br>• Published for consortium members only. |
| Release I | • Corrected errata in revision record. |
| Release J Draft | • Corrected property name of the "rated power generation" property to the "rated power generation output".<br>• Changed "rated power generation output" property, "power generation status" property, and "system interconnection status" property for the "fuel cell class" from optional to mandatory. Changed announcement at status change of the "power generation status" property from optional to mandatory.<br>• Partially added descriptions to the detailed description of the "system interconnection status" property of the "fuel cell class". |



© 2000 - 2023 ECHONET Consortium

| | |
|---|---|
| | • Added "power generation request time setting" property and "designated power generation status" property to the "fuel cell class".<br>• Added "chargeable capacity of vehicle mounted battery" property, "remaining chargeable capacity of vehicle mounted battery" property, "vehicle ID" property, and "discharging amount setting" property to the "electric vehicle charger/discharger class".<br>• Added property values to the "vehicle connection and chargeable/dischargeable status" property for the "electric vehicle charger/discharger class".<br>• Added "*8" of note 2 of the "electric vehicle charger/discharger class". Added some drawings for related properties and list of the properties related to a status of the electric vehicle charger/discharger itself.<br>• Added detailed descriptions of the "dischargeable capacity of vehicle mounted battery 1" property, "remaining dischargeable capacity of vehicle mounted battery 1" property, "remaining dischargeable capacity of vehicle mounted battery 3" property, "vehicle connection and chargeable/dischargeable status" property, "vehicle connection confirmation" property, "used capacity of vehicle mounted battery 1" property, "remaining stored electricity of vehicle mounted battery 1" property, "remaining stored electricity of vehicle mounted battery 3" property, "charging amount setting 1" property, and "charging amount setting 2" property to the "electric vehicle charger/discharger class".<br>• Added "chargeable capacity of vehicle mounted battery" property, "remaining chargeable capacity of vehicle mounted battery" property, "vehicle ID" property, and "charging amount setting" property to the "electric vehicle charger class".<br>• Added property values of the "vehicle connection and chargeable status" property for the "electric vehicle charger class".<br>• Added "*5" of note 2 to the "electric vehicle charger class". Added some drawings for related properties and list of the properties related to a status of the electric vehicle charger itself.<br>• Added detailed descriptions of the "vehicle connection and chargeable status" property, "vehicle connection confirmation" property, "used capacity of vehicle mounted battery 1" property, "remaining stored electricity of vehicle mounted battery 1" property, and "remaining stored electricity of vehicle mounted battery3" property for the "electric vehicle charger class".<br>• Newly added extended lighting system class.<br>• Added a description similar with the "extended lighting system class" to the detailed descriptions for the "lighting system class".<br>• Published for consortium members only. |
| Release J | • Corrected clerical errors in the detailed descriptions of the "SI value resetting" property in the property table and the detailed descriptions of the "collapse occurrence status resetting" property for the "earthquake sensor class".<br>• Corrected clerical errors (from "power consumption range for indoor units" to "power consumption range for indoor units") in the detailed descriptions of the package-type commercial air conditioner (outdoor unit) (except those for facilities) class.<br>• Corrected clerical errors in detailed descriptions of the "measured in-house cumulative power consumption" property for the "fuel cell class". |



© 2000 - 2023 ECHONET Consortium

| | |
|---|---|
| | ・ Corrected clerical errors in “*3”, “*4”, “*5” under the property list for the “storage battery class”.<br>・ Clarified an operation when a setting value is entered to the detailed descriptions of the “charging amount setting 1” property, “charging amount setting 2” property, and “discharging amount setting” property for the “electric vehicle charger/discharger class”.<br>・ Clarified an operation when a setting value is entered to the detailed descriptions of “charging amount setting” for the “electric vehicle charger class”.<br>・ Added a description that the figure is provided for reference purpose only to the detailed descriptions of the “power consumption limit setting” property for the “extended lighting system class”.<br>・ Further clarified that the description at the end of the “extended lighting system class” is provided for reference purpose only. |
| Release K Draft | ・ Added “automatic operation controlling setting” property and “fading control change time setting” property for the extended lighting system class”.<br>・ Added “output power control setting 1” property, “output power control setting 2” property, “anti-reverse power flow function setting” property, “output power controlling schedule” property, “next access date and time” property, “anti-reverse power flow function type” property, “output power change time setting value” property, “upper limit clip setting value” property, “operation power factor setting value” property, “FIT contract type” property, “self-consumption type” property, “capacity approved by equipment” property, “conversion factor property”, “output power restraint status” property” for the “household solar power generation class”. Changed “identification number" property, “system interconnection status" property, “rated power generation output (when the system is interconnected)" property from optional to mandatory, while changing “current time setting" property and “current date setting" property from optional to mandatory conditionally.<br>・ Newly added “gas heat pump-type commercial air conditioner (indoor unit) class”, “gas heat pump-type commercial air conditioner (outdoor unit) class”, “lighting for solid light-emitting source class”, and “multiple input PCS class”.<br>・ Published for consortium members only. |
| Release K | ・ Corrected “gas heat pump-type commercial air conditioner (outdoor unit) class” to “gas heat pump-type commercial air conditioner (outdoor unit) class”.<br>・ Corrected property details of “time slot operation factor setting” property for the “gas heat pump-type commercial air conditioner (outdoor unit) class”.<br>・ Deleted “current time setting” property from the “gas heat pump-type commercial air conditioner (outdoor unit) class”. (It can be inherited from super class, even there is no description.)<br>・ Switched the sequential order of detailed description of “measured temperature value of outdoor unit” property and “group information” property for the “gas heat pump-type commercial air conditioner (outdoor unit) class”.<br>・ Added “upper limit clip” to the term description column related to output power control of the “household solar power generation class”.<br>・ Added specifications for the case that requires no output power control to the detailed description |



© 2000 - 2023 ECHONET Consortium

| | |
|---|---|
| | of the "output power control setting 2" property for the "household solar power generation class".<br>・ Corrected clerical errors in "output power controlling schedule" property of the "household solar power generation class" and detailed descriptions of "measured amount of instantaneous power generation" property.<br>・ Changed "anti-reverse power flow function setting" property for the "household solar power generation class", property name of the "anti-reverse power flow function type" to "function to control purchasing surplus electricity setting", and also correct detailed description and term definition to the "function to control purchase surplus electricity type".<br>・ Corrected descriptions under the table "*1" for "multiple input PCS class".<br>・ Added a description for the detailed description of "list of connected devices" property for the "multiple input PCS" class. |
| Release L Draft | ・ Newly added "hybrid water heater class".<br>・ Added definitions for the no measurement log to "cumulative amount of electric energy measurement log" property for the "electric energy sensor class".<br>・ Added "mist sauna operation setting" and "water mist operation setting" properties to the "bathroom heater and dryer class".<br>・ Added definitions of property values to "operation setting" and "ON timer reservation setting 2" properties for the "bathroom heater and dryer class".<br>・ Published for consortium members only. |
| Release L | ・ Corrected clerical errors in the property details of "operation mode status during auto operation" for the "gas heat pump-type commercial air conditioner (outdoor unit) class".<br>・ Corrected data type for the "solar power generation utilization time" property for the "hybrid water heater class".<br>・ Changed EPC of "measured remaining hot water amount" and "tank capacity" properties for the "hybrid water heater class".<br>・ Changed description order of "hot water supply status", "measured remaining hot water amount", and "tank capacity" properties for the "hybrid water heater class" to the EPC order.<br>・ Clearly stated that combined use of the "instantaneous water heater class" is recommended when implementing "hybrid water heater class".<br>・ Added definition for when an end time becomes earlier than a start time in the property details of the "solar power generations utilization time" property for the "hybrid water heater class". |
| Release M Draft | ・ Newly added "range hood class" and "dishwasher and dryer class".<br>・ Added "temperature setting 2 – Maximum settable level" property to the "floor heater class". Partially added a description to the "temperature setting 2" property.<br>・ Added "maximum allowable setting level for cold water temperature setting 2" and "maximum allowable setting level for warm water temperature setting 2" properties to the "cold/hot water heat source equipment class". Partially added a description to the "water temperature setting 2" property accordingly.<br>・ Added "ventilation mode automatic mode setting", "ventilation method setting", "ventilation |



© 2000 - 2023 ECHONET Consortium

| | |
|---|---|
| | mode setting", "cooling/heating high-low setting", "measured value of outdoor air temperature", "measured value of outdoor air humidity", "measured value of return air temperature", "measured value of return air relative humidity", "measured value of supply air temperature", "measured value of supply air relative humidity", "measured value of exhaust airexhaust airsupply air temperature", "measured value of exhaust airexhaust airsupply air relative humidity", "measured value of electric current consumption" properties to the "air conditioner ventilation fan" class.<br>・ Corrected the unit of some properties in the "electric water heater class" from "WH" to "Wh".<br>・ Corrected clerical errors of "fuel cells" to "hybrid water heaters" in the detailed description of the "hybrid water heater" class.<br>・ Added "charging method" and "discharging method" properties to the "storage battery" class. Further added descriptions to "system interconnection", "charging electric energy setting", "discharging electric energy setting", "charging current setting", and "discharging current setting" properties to clarify the specifications. |
| Release M | ・ Corrected clerical errors in the revised parts of the "electric heater", "fan heater", and "combination microwave oven (electronic oven)" classes of the Release M Draft.<br>・ Corrected detailed descriptions for "ventilation air flow rate setting", "gas detection status", "light source color setting", "brightness level setting", and "error detection mode" properties to the "range hood class".<br>・ Deleted colored lighting (0x45) from property value of the "light source color setting" property for the "range hood class".<br>・ Corrected detailed descriptions for "dish-washing level" and "drying level" properties of the "dishwasher and dryer class" |
| Release N Draft | ・ Newly added "smart electric energy meter for sub-metering class".<br>・ Added "charging method", "discharging method", "purchasing power electric energy setting", "re-interconnection permission setting" properties to the electric vehicle charger/discharger class.<br>・ Added "charging/discharging" to the property values of "operation mode setting" of the electric vehicle charger/discharger class. Added an operation image to the detailed descriptions, accordingly.<br>・ Corrected clerical errors in the detailed descriptions of the "dishwasher and dryer class".<br>・ Added "setting unknown" to light source color setting property for the "range hood class" and illuminance setting property for the "general lighting class" using a property table for the "range hood class" and "general lighting class". (They are defined in the detailed descriptions, so that no specification shall be added.)<br>・ Clarified the detailed descriptions of controller ID property for the "controller class". |
| Release N | ・ Corrected the clerical errors in property value in the discharge property for the "electric vehicle charger/discharger class". |
| Release O | ・ Skipped Release "O" to avoid misreads between "O" and "0". |
| Release P Draft | ・ Added requirements related to revision numbers to standard version information property.<br>・ Clarified the detailed description of the "remote control setting property".<br>・ Added "maintenance status" property to the "electric vehicle charger/discharger class". |



© 2000 - 2023 ECHONET Consortium

| | |
|---|---|
| | • Added "Preparation" to the property values of operation mode setting of the "electric vehicle charger/discharger class".<br>• Corrected an errata under the table for "multiple input PCS class" in the "identification number" property.<br>• Corrected clerical errors under of the "air flow direction (horizontal) setting property" for the "home air conditioner class".<br>• Corrected descriptions of "current value sensor class" and "current volume sensor class", changing them to "current sensor class".<br>• Corrected property name of the "gas detection threshold level status property" under the table for "range hood class" to "gas detection threshold level setting property". |
| Release P | • Added "when the measured value cannot be sent, 0xFD shall be used" to the detailed description of the "measured value of indoor relative humidity" property of the "air conditioner ventilation fan class".<br>• Corrected clerical errors in detailed descriptions of the "measured cumulative amount of electric energy (normal direction)" of the "smart electric energy meter class". |
| Release P rev.1 Draft | • Corrected clerical errors in the detailed descriptions for "(7) AC chargeable capacity" and "(8) AC dischargeable capacity" of the storage battery class.<br>• Added "V2G" to the "charging method" and "discharging method" properties of the "electric vehicle charger/discharger class".<br>• Added "Charging/discharging electric power setting" to the "electric vehicle charger/discharger class" |
| Release P rev.1 | • Corrected clerical errors in the detailed descriptions for "(2) indoor relative humidity setting" of the "ventilation fans class".<br>• Added descriptions for the special operation mode setting property of the "humidifier class".<br>• Added "automatic" to the property values of "operation mode setting" of the "electric vehicle charger/discharger class".<br>• Added/corrected clerical errors in the detailed descriptions for "(28) chargeable capacity" and "(29) dischargeable capacity" of the "electric vehicle chargers/dischargers battery class".<br>• Added "(32) Charging/discharging electric power setting" of the "electric vehicle charger/discharger class". |
| Release Q Draft | • Newly added "distributed generator's electric energy meter class".<br>• Corrected "measured cumulative power consumption" property name for the device object super class and descriptions in the explanatory notes to "measured cumulative electric power consumption".<br>• Corrected clerical errors in the property details in the "daytime heating shift time 2" property in the table for the "electric water heater class".<br>• Corrected data type of "charging/discharging electric energy setting" property for the "electric vehicle charger/discharger class".<br>• Added definition related to idle and standby of "operation mode setting" property for the "electric vehicle charger/discharger class". |



© 2000 - 2023 ECHONET Consortium

| | |
|---|---|
| | • Added "operating status" property for the "electric vehicle charger/discharger class".<br>• Added definition related to idle and standby of "operation mode setting" for the "electric vehicle charger class".<br>• Corrected clerical errors in the detailed descriptions for "washer and dryer cycle option list 2" property for the "washer and dryer class".<br>• Added "Measured cumulative amount of flow rate 2" property to the "water flow meter class". |
| Release Q | • Corrected "measured cumulative electric power consumption" to "measured cumulative power consumption" in the whole document.<br>• Partially corrected descriptions defining idle and standby of "operation mode setting" property for the "electric vehicle charger/discharger class" in consideration of their relationship with other states.<br>• Added "current date" property to the "distributed generator's electric energy meter class". Deleted "current time setting" property.<br>• Reviewed definition of "device ID" property for the "distributed generator's electric energy meter class". Postponed stipulation of the detailed specification of the Release Q.<br>• Corrected clerical errors in the "distributed generator's electric energy meter class".<br>• Corrected clerical errors in the detailed descriptions for "washer and dryer cycle option list 1, 2, and 3" for the "washer and dryer class". |
| Release Q rev.1 Draft | • Added "identification number of device to be metered" property to the "decentralized electric energy meter class".<br>• Added definition of the "device ID" property for the "decentralized electric energy meter class".<br>• Added property value to the "time synchronizing status" property for the "decentralized electric energy meter class" and changed the definition of existing properties. |
| Release Q rev.1 | • Corrected descriptions in note 2) under the "decentralized electric energy meter class", and revised descriptions *1 through *7 in the table accordingly.<br>• Unified the names for the "identification number of device to be metered" property for the "decentralized electric energy meter class".<br>• Added the description that the device object of this class and the device object of the device to be metered are implemented on the same node, in the "decentralized electric energy meter class".<br>• Corrected descriptions in the detailed descriptions for the "time synchronization status property" for the "decentralized electric energy meter class". |
| Release R Draft | • Newly added "bidirectional high voltage smart electric energy meter class".<br>• Newly added "frequency control class".<br>• Added property values for "Recover operation no required" and "Repair location unknown" to the "fault description" of the "device object super class".<br>• Made the fault description and product code properties in the "household solar power generation class", "storage battery class", "electric vehicle chargers/dischargers class", and "multiple input PCS class" required. |



© 2000 - 2023 ECHONET Consortium

| | |
|---|---|
| | • Partially corrected detailed descriptions of the "vehicle connection and chargeable/dischargeable status property" for the "electric vehicle charger/discharger class".<br>• Added standalone descriptions and cases to the detailed descriptions of the "device type" property for the "distributed generator's electric energy meter class".<br>• Corrected the access rule for "current hour, minute, and second setting" property of the "distributed generator's electric energy meter class" (errata were issued in the Release Q rev. 1)<br>• Corrected the annotation number for no measurement data for the "historical data of measured cumulative amounts of electric energy (alternating current input)" property of the "distributed generator's electric energy meter class" (errata were issued in the Release Q rev. 1).<br>• Added "Route B Identification number", "one-minute measured cumulative amounts of electric energy measured (normal and reverse directions)", "historical data of measured cumulative amounts of electric energy 3 (normal and reverse directions)", and "day for which the historical data of measured cumulative amounts of electric energy is to be retrieved 3" properties to the "low-voltage smart electric energy meter class". |
| Release R | • Changed name from "manufacturer code" to "manufacturer code/member ID" of the "device object super class requirements".<br>• Corrected the descriptions of "low-voltage smart electric energy meter class".<br>• Corrected clerical errors in the property table for the "distributed generator's electric energy meter class".<br>• Corrected the descriptions of "bidirectional high voltage smart electric energy meter class" and corrected the order of entries and clerical errors in the property table.<br>• Added property values for the "unit for cumulative amounts of active electric energy", the "unit of electric power demand", the "unit of cumulative maximum electric power demand", and the "unit for cumulative amounts of reactive electric energy" properties of the "bidirectional high voltage smart electric energy meter class".<br>• Changed requirements for the "measured instantaneous currents" property of the "bidirectional high voltage smart electric energy meter class" as the "measured instantaneous currents 2" property.<br>• Corrected clerical errors in the property table for "frequency control class".<br>• Deleted the description of the "production date" property and "cumulative operating time" property of the "frequency control class". |
| Release R rev.1 Draft | • Reflected descriptions of Errata in Release R.<br>• Corrected name from "manufacturer code/member ID" to "member ID/ Manufacturer code" of the "device object super class requirements". |
| Release R rev.1 | • Reflected descriptions of Errata in Release R. |



© 2000 - 2023 ECHONET Consortium

The specifications published by the ECHONET Consortium are established without regard to industrial property rights (e.g., patent and utility model rights). In no event will the ECHONET Consortium be responsible for industrial property rights to the contents of its specifications.

In no event will the publisher of this specification be liable to you for any damages arising out of use of this specification.

The original language of The ECHONET Specification is Japanese. The English version of the Specification was translated the Japanese version. Queries in the English version should be referred to the Japanese version.



© 2000 - 2023 ECHONET Consortium

# Chapter1 **Outline of this document**

This Appendix describes detailed property configurations of the device objects of class groups (class group codes 0x00 to 0x06) corresponding to device objects, and device object super classes.

Each class corresponding to device objects is inherited from properties of the device object super class. Accordingly, the device mounting each class shall mount a property specified by each class of this Appendix and a property of the device object super class. For the basic specifications for device objects, refer to “Part 2 ECHONET Communication Middleware Specifications” and “Part 2 ECHONET Lite Communication Middleware Specifications.” Properties specified as array elements (SetM, GetM) cannot be installed in an ECHONET Lite device.

It is not necessary for the actual device to implement all functions which correspond to codes listed in the “Value range” of “Contents of property,” but the actual device should implement only those codes to hold as its function. See also the requirements for the “communication definition objects,” which are used to specify the behaviors of equipment objects in relation to communication, specified in “Part 2 ECHONET Communication Middleware Specifications.”
For example, when it is necessary to totally or partly disable the controls on the main unit side (remote control, etc.), the “local control limit setting” communication definition class is used.
The “communication definition objects” is supported only ECHONET. (ECHONET Lite is non-support.)
This document also defines properties that are now difficult to install in all devices but recommended from the perspective of service for installation in devices as “Conditionally Required.”

Each of the conditionally required properties of each class is differentiated in the property table for the class from the other types of properties by one of the symbols shown in Table 1-1, which is given in the “Mandatory” column of the relevant row. Each of the symbols shown in Table 1-1 represents application services that can be achieved by implementing the property in question.



© 2000 - 2023 ECHONET Consortium

**Table 1-1 "Conditionally Required Property" Symbols and Corresponding Application Services**

| Application services name | Examples of services | Symbol |
|---|---|---|
| Mobile services | ・ Remote monitoring of the operation statuses of devices intended for indoor use<br>・ Remote control and remote locking of devices intended for indoor use<br>・ Remote monitoring of visitors and day-to-day activities of senior citizens | M |
| Energy services | ・ Monitoring of electricity consumptions and electricity bills<br>・ Coordinated power-saving operation of air conditioners, exhaust fans, lighting apparatuses and window shades<br>・ Contract-based electricity demand control | E |
| Home amenity services | ・ Centralized control of window shades, exhaust fans and lighting apparatuses<br>・ Scheduled operation of devices intended for indoor use (preheating, precooling) | Hm |
| Home health-care services | ・ Health management services (hospitals, health adviser companies)<br>・ Life care services for senior citizens<br>・ Monitoring and control of home medical care equipment | Hh |
| Security services | ・ Fire prevention (monitoring to detect fires, gas leaks and electricity leaks)<br>・ Disaster prevention (detection of water leaks, measures to respond to earthquakes, prevention of freezing)<br>・ Crime prevention (visitor control, prevention of trespassing) | S |
| Remote appliance maintenance services | ・ Remote maintenance of devices intended for indoor use and remote diagnosis of such devices to detect failures<br>・ Remote consulting for the operation of devices intended for indoor use | R |

This version of Appendix introduces the concept of "manufacturer-specific codes," so that manufacturer-specific functions can be covered. Manufacturer-specific code values can only be assigned in relation to the codes specified as manufacturer-specific codes in the "Contents of property" column. Manufacturer-specific codes are codes that are outside the scope of the ECHONET Specification. Manufacturer-specific code values shall be defined by individual manufacturers, and the addition and deletion of and alterations to manufacturer-specific code values shall be done by individual manufacturers at their discretion. Whether to publish the assigned manufacturer-specific code values shall be determined by individual manufacturers.



© 2000 - 2023 ECHONET Consortium

# Chapter2 **Device Object Super Class Requirements**

The device object super class properties are properties that are inherited to and implemented in each device object class. The device object super class requirements are as described below.

It is mandatory to implement the “operation status” (EPC = 0x80) property in all device object classes as a “Get” access rule, that is, as a property that can be referenced by the other nodes. Similarly, it is mandatory to implement the “Status change announcement property map” (EPC = 0x9D), “Fault status” (EPC = 0x88), “Set property map” (EPC = 0x9E) and “Get property map” (EPC = 0x9F) properties as “Get” access rules, that is, as properties that can be referenced.

The implementation of “SetM property map” and “GetM property map” is mandatory for ECHONET devices, but is not permitted for ECHONET Lite devices because it is not possible to implement array element properties in the case of ECHONET Lite devices.

Device object super class is defined using the 0x80 to 0x9F domain, which is the domain common to all classes. The domain common to all classes has been used to define “ON timer reservation setting” (0x90), “ON timer time setting” (0x91), “ON timer relative time setting” (0x92), “OFF timer reservation setting” (0x94), “OFF timer time setting” (0x95) and “OFF timer relative time setting” (0x96), although this is not a super class requirement. Explanations about the device objects in which these properties are implemented are provided in “Detailed Requirements for the Device Objects” in APPENDIX. Table 2-1 shows a list of the device object super class properties.

**Table 2-1 List of Device Object Super Class Properties**

| Property name | EPC | Contents of property<br>Value range (decimal notation) | Data size | Data size (Byte) | Access rule | Man-datory Note2 | Announce-ment at status change | Remark |
|---|---|---|---|---|---|---|---|---|
| Operation status | 0x80 | This property indicates the ON/OFF status. | unsigned char | 1 | Set | | ○ | |
| | | ON=0x30, OFF=0x31 | | | Get | ○ | | |
| Installation location | 0x81 | This property indicates the installation location | unsigned char | 1 or 17 | Set/ Get | ○ Note4 | ○ | |
| | | See “2.2 ‘Installation location’ property.” | | | | | | |
| Standard version information | 0x82 | This property indicates the release number of the corresponding Appendix. | unsigned char × 4 | 4 | Get | ○ | | |
| | | First byte: Fixed at 0x00 (reserved for future use).<br>Second byte: Fixed at 0x00 (reserved for future use).<br>Third byte: Indicates the order of release in the ASCII format.<br>Fourth byte: 0x00-0xFF (revision number). | | | | | | |
| | | A number that allows each object to be uniquely identified. | | 9 | | | | |



© 2000 - 2023 ECHONET Consortium

| | | | | | | | | |
|---|---|---|---|---|---|---|---|---|
| Identification number | 0x83 | First byte: lower-layer communication ID field<br>0x01 - 0xFD:<br>If a unique number is assigned by the lower-layer communication protocols, an arbitrary ID number is set according to the protocol types. (Not used in ECHONET Lite).<br>0x11 to 0x1F: Power line Communication Protocol a and d systems<br>0x31 to 0x3F: Low-Power Radio Communication Protocol<br>0x41 to 0x4F: Extended HBS<br>0x51 to 0x5F: IrDA<br>0x61 to 0x6F: LonTalk<br>0x71 to 0x7F: Bluetooth<br>0x81 to 0x8F: Ethernet<br>0x91 to 0x9F: IEEE802.11/11b<br>0xA1: Power line Communication Protocol c systems<br>0xB1: IPv6/Ethernet<br>0xB2: IPv6/6LoWPAN<br>0xFE: 2nd-17th bytes are defined by the manufacturer according to the product type. (Refer to the detailed explanation.)<br>0xFF: This ID number is used if 2nd-9th bytes are randomly generated by the lower-layer communication protocols.<br>0x00: Identification number is not set.<br><br>Second and succeeding bytes: unique number field | unsigned char | or 17 | Get | | | |
| Measured instantaneous power consumption | 0x84 | This property indicates the instantaneous power consumption of the device in watts.<br>0x0000 to 0xFFFD (0 to 65533W) | unsigned short | 2 | Get | | | |
| Measured cumulative electric energy consumption | 0x85 | This property indicates the cumulative electric energy consumption of the device in increments of 0.001kWh.<br>0x00000000 to 0x3B9AC9FF<br>(0 to 999,999.999kWh) | unsigned long | 4 | Get | | | |
| Manufacturer's fault code | 0x86 | This property indicates the manufacturer-defined fault code.<br>First byte: Indicates the data size of the fault code field.<br>Second to fourth bytes: Manufacturer code<br>Fifth and succeeding bytes: Field for manufacturer-defined fault code | unsigned char × (Max)225 | Max 225 | Get | | | |
| Current limit setting | 0x87 | This property indicates the current limit setting (0 to 100%).<br>0x00 to 0x64 (=0 to 100%) | unsigned char | 1 | Set/ Get | | | |



© 2000 - 2023 ECHONET Consortium

| | | | | | | | | |
|---|---|---|---|---|---|---|---|---|
| Fault status | 0x88 | This property indicates whether a fault (e.g. a sensor trouble) has occurred or not.<br>Fault occurred=0x41, No fault has occurred=0x42 | unsigned char | 1 | Get | ○ | ○ | |
| Fault description | 0x89 | Describes the fault.<br>See “2.5 ‘Fault Description’ Property.” | unsigned short | 2 | Get | | | |
| Member ID/Manufacturer code | 0x8A | 3-byte manufacturer code<br>(Defined by the ECHONET Consortium.) | unsigned char × 3 | 3 | Get | ○ | | |
| Business facility code | 0x8B | 3-byte business facility code<br>(Defined by each manufacturer.) | unsigned char × 3 | 3 | Get | | | |
| Product code | 0x8C | Identifies the product using ASCII code.<br>(Defined by each manufacturer.) | unsigned char × 12 | 12 | Get | | | |
| Production number | 0x8D | This property indicates the production number using ASCII code.<br>(Defined by each manufacturer.) | unsigned char × 12 | 12 | Get | | | |
| Production date | 0x8E | 4-byte production date code<br>This property indicates the production date in the YYMD format (1 character = 1 byte).<br>YY: Year (e.g. 1999=0x07CF)<br>M: Month (e.g. December=0x0C)<br>D: Day (e.g. 20th=0x14) | unsigned char × 4 | 4 | Get | | | |
| Power-saving operation setting | 0x8F | This property indicates whether the device is operating in power-saving mode.<br>Operating in power-saving mode =0x41<br>Operating in normal operation mode =0x42 | unsigned char | 1 | Set/ Get | | | |
| Remote control setting | 0x93 | This property indicates whether the operation is through a public network or not. (0x41, 0x42)<br>Also indicates whether the operations through a public network are possible or not in the situation that the communication line under observation is normal. (0x61, 0x62)<br>Not through a public network＝0x41<br>Through a public network＝0x42<br>Communication line is normal (operation through a public network is not possible) = 0x61<br>Communication line is normal (operation through a public network is possible) = 0x62<br>* The values (0x61, 0x62) above must not be overwritten by the device when receiving Set request. | unsigned char | 1 | Set/Get | | | |
| Current time | 0x97 | Current time (HH: MM format) | unsigned | 2 | Set/ | | | |



© 2000 - 2023 ECHONET Consortium

| | | | | | | | | |
|---|---|---|---|---|---|---|---|---|
| setting | | 0x00 to 0x17 : 0x00 to 0x3B<br>(=0 to 23): (=0 to 59) | char<br>× 2 | | Get | | | |
| Current date setting | 0x98 | Current date (YYYY: MM: DD format)<br>1 to 0x270F : 1 to 0x0C : 1 to 0x1F<br>(=1 to 9999) : (=1 to 12) : (=1 to 31) | unsigned char<br>× 4 | 4 | Set/Get | | | |
| Power limit setting | 0x99 | This property indicates the power limit setting in watts.<br>0x0000 to 0xFFFF (0 to 65535W) | unsigned short | 2 | Set/Get | | | |
| Cumulative operating time | 0x9A | This property indicates the cumulative number of days, hours, minutes or seconds for which the device has operated, using 1 byte for the unit and 4 bytes for the time.<br>First byte: Indicates the unit.<br>Second: 0x41; Minute: 0x42;<br>Hour: 0x43; Day:0x44<br>Second to fifth bytes:<br>Indicates the elapsed time in the unit specified by the first byte.<br>0x00000000 to 0xFFFFFFFF<br>(0 to 4294967295) | unsigned char<br>+<br>unsigned long | 1 + 4 bytes | Get | | | |
| SetM property map | 0x9B | See Annex 1. | unsigned char × (MAX17) | Max. 17 | Get | ○<br>Note3 | | |
| GetM property map | 0x9C | See Annex 1 | unsigned char × (MAX17) | Max. 17 | Get | ○<br>Note3 | | |
| Status change announcement property map | 0x9D | See Annex 1. | unsigned char × (MAX17) | Max. 17 | Get | ○ | | |
| Set property map | 0x9E | See Annex 1. | unsigned char × (MAX17) | Max. 17 | Get | ○ | | |
| Get property map | 0x9F | See Annex 1. | unsigned char × (MAX17) | Max. 17 | Get | ○ | | |

Note1: In the case of a transmission-only device as defined in ECHONET Lite, the implementation of the properties specified as mandatory properties in the table is not mandatory. In addition, announcement at status change for the "Operation status" property is not mandatory. For the handling of transmission-only devices, see Chapter 3 of "Part 5 ECHONET Lite System Design Guidelines."

Note2: The ○ marks in the "Announcement at status change" column indicate that the processing is mandatory when the property is implemented.

Note3: GetM property map and SetM property map may not be implemented in ECHONET Lite devices.

Note4: The size of 17 bytes is optional. See the section of 2.2 "Installation location" property for more



© 2000 - 2023 ECHONET Consortium

information.

## 2. 1 “Operation status” property

The “Operation status” property of the device object super class indicates whether the functions specific to each class are operating in the actual device (ON) or not (OFF). In the case of a node in which a device object class is implemented and the functions specific to that class start operating upon startup of the node, this property may be implemented with the value fixed at 0x30. (However, the operation status of the communications function of the node shall be indicated in the “Operation status” property of the node profile object.)

## 2. 2 “Installation location” property

The “Installation location” property indicates the location at which the device has been installed in the form of 1-byte bitmap information. This property is a rewritable mandatory property. When the value is changed, the new value must be broadcast throughout the domain.

The 8 bits of the “Installation location” property are assigned a free definition designation bit, an installation location code and a location number. In the case where all the bits are 0, a special code that indicates that the installation location has not been specified is used. In the case where all the bits are 1, a special code that indicates that the installation location is indefinite is used.

The information contained in each of the bits is as described below. Table 2-2 shows the relationships between the installation location type, free definition designation bit, installation location code and location number.

•Free definition designation bit (b7)

This is comprised of a single bit, b7. When b7 is 1, the installation location code and location number can be freely defined.

When b7 is 0, the installation location code and location number indicate the installation location of the device according to the rules specified in Table 2-2.

•Installation location code (b3 to b6)

This code is comprised of the 4 bits from b3 to b6. When b7 is 1, this code can be freely defined.

When b7 is 0, this code indicates the type of the installation location of the device according to the rules specified in Table 2-2.

•Location number (b0 to b2)

This number is comprised of the 3 bits from b0 to b2. When b7 is 1, this number can be freely defined. When b7 is 0, this number is used to distinguish a space of a given type from another space of the same type. For example, when there are two lavatories, the lavatory on the first



© 2000 - 2023 ECHONET Consortium

floor can be distinguished from the lavatory on the second floor by assigning 001b as the location number for the former and 010b as the location number for the latter.

When b7 is 0, the value 000b for the location number indicates that the “Installation location” property has been initialized on the assumption that the device will be installed at the installation location specified by the installation location code. This situation is herein expressed as the “location number not specified” situation.

In the case where the “Installation location” property has been initialized without making an assumption about the type of the installation location for the device, the setting must be set to 0x00 (the “installation location not specified” code). When it is inappropriate to specify a specific location type as the installation location type for the device, the “Installation location” property setting must be set to 0xFF (the “installation location indefinite” code).

When the installation location code 0x01 is set, the next 16 bytes indicate the latitude, longitude, and altitude of the location where the equipment is installed. The total number of bytes is 17. Of the 16 bytes, excluding the installation location code, if the higher-order 8 bytes are 0x00, 0x00, 0x1B, 0x00, 0x00, 0x00, 0x00, and 0x03, the lower-order 8 bytes shall follow the location information codes specified by the Geospatial Information Authority of Japan. The position information definition of the installation location code 0x01 is optional.

The values 0x02 to 0x07 are reserved for future use.

**Table 2-2 Installation Location (Space) Types and the Bit Values Assigned to Them**

| Installation location type | Free definition designation bit (MSB) | Installation location code | | | | Location number | | (LSB) |
|---|---|---|---|---|---|---|---|---|
| | b7 | b6 | b5 | b4 | b3 | b2 | b1 | b0 |
| Living room | 0 | 0 | 0 | 0 | 1 | “000b”-“111b” (“000b” indicates that the location number has not been specified.) | | |
| Dining room | 0 | 0 | 0 | 1 | 0 | | | |
| Kitchen | 0 | 0 | 0 | 1 | 1 | | | |
| Bathroom | 0 | 0 | 1 | 0 | 0 | | | |
| Lavatory | 0 | 0 | 1 | 0 | 1 | | | |
| Washroom/changing room | 0 | 0 | 1 | 1 | 0 | | | |
| Passageway | 0 | 0 | 1 | 1 | 1 | | | |
| Room | 0 | 1 | 0 | 0 | 0 | | | |
| Stairway | 0 | 1 | 0 | 0 | 1 | | | |
| Front door | 0 | 1 | 0 | 1 | 0 | | | |
| Storeroom | 0 | 1 | 0 | 1 | 1 | | | |
| Garden/perimeter | 0 | 1 | 1 | 0 | 0 | | | |
| Garage | 0 | 1 | 1 | 0 | 1 | | | |
| Veranda/balcony | 0 | 1 | 1 | 1 | 0 | | | |
| Others | 0 | 1 | 1 | 1 | 1 | | | |
| Free definition*Note | 1 | “0000000b”-”1111110b” | | | | | | |
| Installation location not specified | 0 | 0 | 0 | 0 | 0 | 0 | 0 | 0 |
| Installation location indefinite | 1 | 1 | 1 | 1 | 1 | 1 | 1 | 1 |
| Position information | 0 | 0 | 0 | 0 | 0 | 0 | 0 | 1 |



© 2000 - 2023 ECHONET Consortium

| | |
|---|---|
| reserved for future use | “00000010b”-”00000111b” |

Note: “Free definition” means that the installation location code and location number can be freely defined for the use of the device in a store or medium- or small-sized building.

## 2. 3 “Standard version information” property

The “standard version information” property indicates the release order of the APPENDIX as a one-byte ASCII code, while indicating revision number as a one-byte binary value.

The first and second bytes are fixed at 0x00 in this version, reserved for future expansion. The third byte indicates the order of release.

If only adding or changing properties when revising specifications, or correcting errata and clerical errors, a revision number shall be assigned rather than updating the order of release of this specification, and the revision number shall be indicated by a binary value in the fourth byte. When updating the order of release indicated in the third byte, the revision number of the fourth byte shall be 0x00. For example, if APPENDIX Release is P and the revision number is 2, the first and second bytes shall be 0x00(0), the third byte 0x50(P), and the fourth byte 0x02(2).

## 2. 4 “Fault status” property

The “Fault status” property of the device object super class indicates whether a fault has occurred in the actual device. This property shall be set to 0x41 when there is a fault and 0x42 when there is no fault.

## 2. 5 “Fault description” property

The “Fault description” property shall be assigned fault description code values as specified in Table 2-3. A “recoverable fault” as defined in the table is a fault which is currently inhibiting the proper operation of the device or a function of the device but whose cause can be removed by a user action. A “fault that requires repair” as defined in the table is a fault which is currently inhibiting the proper operation of the device or a function of the device and whose cause cannot be removed without repair work by a specialist.

The lower-order byte of the fault description code shall indicate the general fault classification and the higher-order byte of the fault description code shall indicate the detailed fault classification. The detailed fault classification for recoverable faults will be determined in the future for each class. In the case where recoverable faults or faults that require repair are to be identified only with the general fault classification without using the detailed fault classification, the higher-order byte of the fault description code shall be set to 0x00.

(1) Lower-order byte of the fault description code

The lower-order byte of the fault description code provides an overview of the fault in the form of general fault classification.

The value of the lower-order byte of the fault description code shall be 0x00 when no fault has



© 2000 - 2023 ECHONET Consortium

occurred in the device.

The lower-order byte of the fault description code shall be set to a value between 0x01 and 0x09 when a recoverable fault (i.e. a fault that can be recovered from by a user action) occurs in the device, according to the value assignment rules described below. The general fault classification for recoverable faults is based on the type of user action required to recover from the fault. 0x01 indicates that a fault has occurred which can be recovered from by restarting the device by turning off the power and turning it on again. 0x02 indicates that a fault has occurred which can be recovered from by restarting the device by performing a reset operation. 0x03 indicates that a fault has occurred which can be recovered from by changing the way the device is mounted or opening/closing a lid or door. 0x04 indicates that a fault has occurred which can be recovered from by supplying fuel, water, air, etc. 0x05 indicates that a fault has occurred which can be recovered from by cleaning the device. 0x06 indicates that a fault has occurred which can be recovered from by changing the battery or cell. 0x07 indicates a fault that does not require a recovery operation. 0x09 can be freely defined by the user. 0x08 is reserved for future revisions to add other types of recoverable faults.

The lower-order byte of the fault description code shall be set to a value between 0x0A and 0x6E when a fault that requires repair occurs in the device, according to the value assignment rules described below. The general fault classification for faults that require repair is based on the location of the fault. 0x0A to 0x13 indicate that a safety device has tripped. 0x14 to 0x1D indicate that a fault has occurred in the user interface. 0x1E to 0x3B indicate that a fault has occurred in the sensor system. 0x3C to 0x59 indicate that a fault has occurred in an actuator etc. 0x5A to 0x6E indicate that a fault has occurred in a control circuit board.

(2) Higher-order byte of the fault description code

The higher-order byte of the fault description code provides detailed information on the fault in the form of detailed fault classification for each general fault classification category.

When the value of the lower-order byte of the fault description code is 0x00 (no fault), the value of the higher-order byte of the fault description code must be 0x00. 0x04 to 0xFF are reserved for future use.

When the value of the lower-order byte of the fault description code is a value between 0x01 and 0x07, the higher-order byte of the fault description code can take the value 0x00 or a value between 0x04 and 0xFF. The higher-order byte of the fault description code shall be set at 0x00 in the case where faults are to be identified only with the general fault classification without using the detailed fault classification. 0x04 to 0xFF are reserved for future class-specific detailed fault classification.

When the value of the lower-order byte of the fault description code is 0x08, the higher-order byte of the fault description code can take the value 0x00 or a value between 0x04 and 0xFF. All of these values are reserved for future use.

When the value of the lower-order byte of the fault description code is 0x09, the higher-order byte of the fault description code can take the value 0x00 or a value between 0x04 and 0xFF. All of these values can be freely defined by the user.



© 2000 - 2023 ECHONET Consortium

When the value of the lower-order byte of the fault description code is a value between 0x0A and 0x6E, the higher-order byte of the fault description code can take the value 0x00 or a value between 0x04 and 0xFF. The higher-order byte of the fault description code shall be set at 0x00 in the case where faults are to be identified only with the general fault classification without using the detailed fault classification. The values 0x04 to 0xFF can be freely defined by the user.

The values between 0x006F and 0x03E8, which are values for combinations of higher- and lower-order bytes of the fault description code, are values that can be freely defined by the user for faults that require repair. If the combinations of higher- and lower-order bytes is 0x03E9, it indicates a fault for which repair location unknown.

The value 0x03FF, which is a value for combinations of higher- and lower-order bytes of the fault description code, indicates that a fault has occurred but the recovery method or fault location cannot be determined.

The values between 0x03EA and 0x03FE, which are values for combinations of higher- and lower-order bytes of the fault description code, are reserved for future use.

**Table 2-3 Fault Description Code Values**

| | | **Fault description code (0x**%%)** | |
|---|---|---|---|
| **General fault classification** | | **Fault description code Lower-order byte (%%)** | **Fault description code Higher-order byte (**)** |
| No fault | | 0x00 | 0x00: No fault<br>0x04-0xFF<br>: Reserved for future use |
| Recoverable faults | Faults that can be recovered from by turning off the power switch and turning it on again or withdrawing and re-inserting the power plug. | 0x01 | 0x00: Faults are to be identified only with the general fault classification without using the detailed fault classification.<br>0x04-0xFF<br>: Reserved for future use |
| | Faults that can be recovered from by pressing the reset button. | 0x02 | |
| | Faults that can be recovered from by changing the way the device is mounted or opening/closing a lid or door. | 0x03 | |
| | Faults that can be recovered from by supplying fuel, water, air, etc. | 0x04 | |
| | Faults that can be recovered from by cleaning the device (filter etc.) | 0x05 | |
| | Faults that can be recovered from by changing the battery or cell. | 0x06 | |



© 2000 - 2023 ECHONET Consortium

| | | | |
|---|---|---|---|
| | Recover operation no required | 0x07 | 0x00: Faults are to be identified only with the general fault classification without using the detailed fault classification.<br>0x04～0xFF<br>: Reserved for future use |
| | reserved for future use | 0x08 | 0x00, 0x04-0xFF |
| | User-definable domain | 0x09 | 0x00, 0x04-0xFF |
| Faults that require repair | Abnormal event or the tripping of a safety device | 0x0a-0x13 | 0x00: Faults are to be identified only with the general fault classification without using the detailed fault classification.<br>0x04-0xFF<br>: user-definable |
| | Fault in a switch | 0x14-0x1D | |
| | Fault in the sensor system | 0x1E-0x3B | |
| | Fault in a component such as an actuator | 0x3C-0x59 | |
| | Fault in a control circuit board | 0x5A-0x6E | |
| | User-definable domain | 0x006F-0x03E8 | |
| | Repair location unknown | 0x03E9 | |
| A fault has occurred, but the recovery method or fault location cannot be determined. | | 0x03FF | |
| reserved for future use | | 0x03EA-0x03FE、0x**6F-0x**FF<br>(**: 04-FF) | |

## 2. 6 “Member ID/manufacturer code” property

The “Manufacturer code” property identifies the manufacturer using a 3-byte code. Each ECHONET Consortium member is assigned a unique “Manufacturer code” property value by the Consortium. Also, 0xFFFFFF shall be defined as for experimental use, while 0xFFFFFE is to be undefined. Note, however, that ECHONET / ECHONET Lite authorization may not be acquired using 0xFFFFFE or 0xFFFFFF as manufacturer codes.

## 2. 7 “Business facility code” property

The “Business facility code” property identifies the relevant business facility of the manufacturer using a 3-byte code. “Business facility code” property values are not defined by the ECHONET Consortium; they are defined by each manufacturer.

## 2. 8 “Product code” property

The “Product code” property identifies the relevant product of the manufacturer using a 12-byte ASCII code. “Product code” property values are not defined by the ECHONET Consortium; they are defined by each manufacturer. When the “Product code” property value is less than 12 bytes, the product code shall be left-justified in the data area and the remainder of the data area shall be padded with NULLs or spaces.



© 2000 - 2023 ECHONET Consortium

## 2. 9 “Production number” property

The “Production number” property indicates the production number of the relevant product of the manufacturer using a 12-byte ASCII code. “Production number” property values are not defined by the ECHONET Consortium; they are defined by each manufacturer. When the “Production number” property value is less than 12 bytes, the production number shall be left-justified in the data area and the remainder of the data area shall be padded with NULLs or spaces.

## 2. 10 “Production date” property

The “Production date” property indicates the production date of the relevant product of the manufacturer using a 4-byte code. Two of the 4 bytes are used to indicate the year of production. The remaining 2 bytes are used to indicate the month of production and the day of production, with one byte used for each.

## 2. 11 “Property map” property

The device object super class defines 3 “property maps,” which provide information on the services that can be provided by the individual properties published by objects.

Of these, “Set property map” and “Get property map” provide information as to what access rules the individual properties published by the implemented objects support in terms of individual product specifications.

“Status change announcement property map” indicates domain broadcast in ECHONET and general broadcast in ECHONET Lite in case of a property value change.

The formats of these maps are as shown in Annex 1. When there is no property to list in a map, the number of properties shall be set to “0” and the second and succeeding bytes shall be left blank.

The definitions of the individual property maps are as follows:

(1)Set property map

This is the property map that lists the properties which support the “Set” access rule. For array properties for which batch writing is to be permitted, the EPC values must be registered on the Set property map.

(2)Get property map

This is the property map that lists the properties which support the “Get” access rule. For array properties for which batch reading is to be permitted, the EPC values must be registered on the Get property map.

(3)SetM property map

This is the property map that lists the properties which support the “SetM” access rule. For array properties for which batch writing is to be permitted, the EPC values must be registered on the



© 2000 - 2023 ECHONET Consortium

SetM property map. ECHONET Lite devices cannot implement the SetM property map because it is not possible to define array properties.

(4)GetM property map

This is the property map that lists the properties which support the “GetM” access rule. For array properties for which batch reading is to be permitted, the EPC values must be registered on the GetM property map. ECHONET Lite devices cannot implement the GetM property map because it is not possible to define array properties.

(5)Status change announcement property map

This is the property map that lists the properties that have been so set that an intra-domain broadcast is performed in ECHONET and that broadcast is performed in ECHONET Lite upon a property value change. These properties include those which are supported in individual product specifications and are specified to require domain broadcasting or general broadcasting in the “Announcement at status change” column in the ECHONET and ECHONET Lite Specifications, and as well as properties that support “announcement at status change” as part of the product specifications independent of the ECHONET and ECHONET Lite Specifications.

A property that is published in a property map as a property capable of supporting the access rule associated with the map must support that access rule. For properties that are not published in a property map as properties capable of supporting the access rule associated with the map, whether to support that access rule shall be device implementation-dependent.

## 2. 12 “Identification number” property

Definitions in ECHONET and ECHONET Lite are as follows:

•ECHONET definition

This property indicates a number that allows each node to be uniquely identified in the domain. The property indicates a lower-layer communication software ID field which stores IDs defined for each lower-layer communication software class and a unique number field that stores a unique identification number that is assigned to each product using a specified method for each lower-layer communication software program. The definition of this unique number is given in the specifications for lower-layer communication software programs in Part III.(However, Version3.00 and later versions of the ECHONET Specifications define this unique number for IP/Bluetooth-dependent lower-layer communication software and IP/Ethernet/IEEE802.3dependent lower-layer communication software.)

This unique number indicates the hardware address. If the hardware address is less than 8bytes, it shall be stored in the unique number field from the highest-order byte and the remaining bytes shall be padded with 0.

Each ECHONET node must have at least one device object, but the node identification number property value must be the same as the value of the node identification number property held by the device object.



© 2000 - 2023 ECHONET Consortium

•ECHONET Lite definition

This property indicates a number that allows each device object to be uniquely identified in the domain. As ECHONET Lite does not define lower-layer communication protocol classes, it only considers 0xFE, 0xFF, and 0x00 as protocol classes of lower-layer communication.

Manufacturer's specific code (0xFE) consists of a manufacturer code field to store the code of each manufacturer and a field defined by each manufacturer.

The first to third bytes indicate a 3-byte manufacturer code specified by the ECHONET Consortium. Byte 4 and later stores the unique ID of each vendor. Each vendor shall ensure that the codes will not overlap.

| | |
|---|---|
| Manufacturer code (3 bytes) | Unique ID field (unique identification number specified by the manufacturer) (13 bytes) |

## 2. 13 "Manufacturer's fault code" property

This property identifies the faults that have occurred in the device using unique fault codes defined by the manufacturer.

The first byte indicates the data size of the fault code field.

The second to fourth bytes indicates the 3-byte manufacturer code assigned to the manufacturer in question by the ECHONET Consortium.

The fifth and succeeding bytes (i.e. the fault code field) contains the unique fault code defined by the manufacturer in question.

In the case where this property is implemented, the implementation of the "Fault description" property is mandatory.

| | | |
|---|---|---|
| Data size of the fault code field (1Byte) | Manufacturer code (3Byte) | Fault code field (unique fault code defined by the manufacturer) (Max221Byte) |

## 2. 14 "Current limit setting" property

The "Current limit setting" property contains the setting for the maximum consumable current (i.e. current limit setting). The value range for this property is from 0 to 100 (from 0x00 to 0x64), and the unit is %. The maximum consumable current at any given moment for the device associated with the object in question is the maximum current specified for that device times the rate specified by the value contained in this property at that moment. When the value of this property is 100, no current limit is imposed. In the case where it is not possible to limit the current consumption using the value specified by this property, the current consumption shall be limited using a value that is closest to and



© 2000 - 2023 ECHONET Consortium

lower than the value specified by this property. A read value shall be one set in the equipment.

## 2. 15 “Power-saving operation setting” property

The “Power-saving operation setting” property contains the status as to whether the device associated with the object in question is operating in power-saving mode. When the value contained is 0x41, the device operates in power-saving mode. When the value contained is 0x42, the device operates in normal operation mode (non-power-saving mode).

## 2. 16 "Remote control setting" property

This property indicates with one byte whether the control is through a public network or not or whether the controls through a public network are possible or not in the situation that the communication line under observation is normal. The value is 0x41 for control not through a public network and 0x42 for control through a public network. The value is 0x61 for a status where the communication line is normal (operation through a public network is not possible) and 0x62 for a status where the communication line is normal (operation through a public network is possible).

For control through a public network, several properties including this property are stored in one message and the message is sent as a control request. When the message is sent, this property shall always be attached to the first property (EDT=0x42: control through a public network).

A control request message refers to a property value write request (no response required), property value write request (response required), or a property value write & read request.

For example, when an air conditioner is set to cooling mode by operation control through a public network, this property shall be set to the first property and sent by a single control request message in order of the "Remote control setting" property and the "Operation mode setting" property.

When a control request message is sent where the property value of this property is 0x42, the minimum value of the processing target property counter (OPC) shall be 2.

For control not through a public network, this property is not given but a control request message shall be sent. For example, when an air conditioner is set to cooling mode not through a public network, only the "Operation mode setting" property shall be sent as a control request message without this property.

When the property status is control through a public network (EDT=0x42) but there is control from a dedicated controller, direct control from the main unit, or control not through a public network, change the status to control not through a public network (EDT=0x41) on devices equipped with this property.

This property also may be used for comprehending on the device side whether the status of the communication line between the control server or the controller that controls the device and the device itself is normal or not. Controllers that do not have a device operation function through a public network need to comprehend the status of the home communication line between the controller and the device. (Configuration A)

(Configuration A)



© 2000 - 2023 ECHONET Consortium

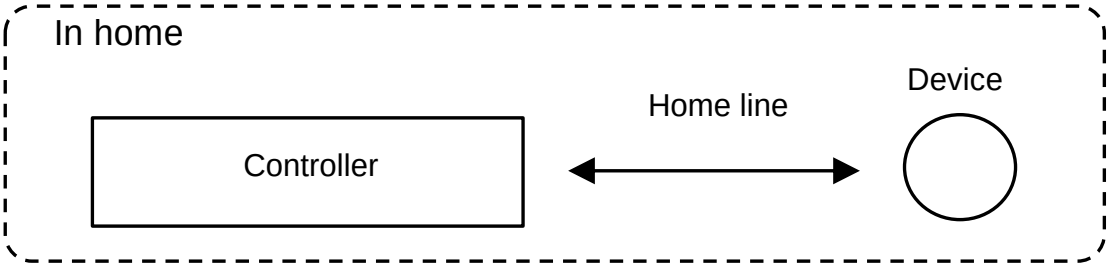


Controllers that do not have a device operation function through a public network need to comprehend the status of the home communication line between the controller and the device and the status of the public network between the controller and control server. (Configuration B)

(Configuration B)

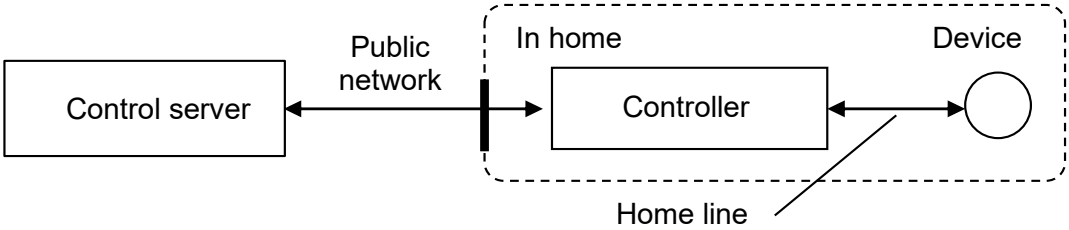


If making the device comprehend the status of communication line, the controller that controls the device always should send a control request message for only this property (in other words, OPC=1) at fixed periods to the device that is being controlled. And the control request message including this property should be received by the device, so that it can comprehended that the line is normal. For the transmission cycle, approximately 2 hours is recommended. When an extremely short transmission cycle is set, there may be cases where other transmissions are blocked or where the burden on the device becomes large. If it is too long, on the other hand, there may be cases where the device is unable to accurately confirm interruption. In view of such conditions, it is necessary to set an appropriate value for the transmission cycle. For transmission, the property value 0x61 is used for Configuration A, and 0x62 is used for Configuration B. The controller in Configuration B should suspend transmission of the control request message while it is recognized that the public network is interrupted.

Based on the above, a device that receives a control request for this property is able to recognize whether the control is through a public network or not (0x41/42), or the status of the communication line (0x61/62).

In addition, the device can also recognize that the communication line is interrupted if receiving of a control request for this property where the property value is 0x61 or 0x62 has been interrupted for more than a certain period. Devices that receive a control request for this property must not update their own property values with the received values if the property value is 0x61 or 0x62.

If it is guaranteed that the device will not become unstable even in cases where the communication line has been interrupted, the device does not have to process the control request in cases where the property value of this property is 0x61 or 0x62 (cases of comprehension of the status of the



© 2000 - 2023 ECHONET Consortium

communication line), but rather by simply sending a response to the transmission source.

Judgments as to whether the status of the communication line is normal or abnormal are dependent on implementation on the device side.

## 2. 17 “Cumulative operating time” property

The “Cumulative operating time” property indicates the cumulative operating time.

The first byte indicates the unit for the cumulative operating time. The values that can be used for the first byte are 0x41 (seconds), 0x42 (minutes), 0x43 (hours) and 0x44 (days).

The second to fifth bytes are treated as one piece of unsigned long data which indicates the cumulative operating time in the unit specified by the first byte. The value range for the cumulative operating time (second to fifth bytes) shall be from 0x00000000 to 0xFFFFFFFE (from 0 to 4294967294). 0xFFFFFFFF shall be used as the overflow code.

The operating states that are to be counted in when counting up the operating periods and the conditions for starting and stopping the counting shall be device-dependent and no requirement is specified for these.

## 2. 18 “Current time setting” property

This property indicates the current local time using a value between 0x00 and 0x17 (0 and 23) for the hour and a value between 0x00 and 0x3B (0 and 59) for the minute.

The first byte of the property value indicates the hour and the second byte indicates the minute.

## 2. 19 “Current date setting” property

This property indicates the current date using a value between 0x0001 and 0x270F (1 and 9999) for the year, a value between 0x01 and 0x0C (1 and 12) for the month and a value between 0x01 and 0x1F (1 and 31) for the day.

The first and second bytes are treated as one piece of unsigned short data which indicates the year (2 bytes). The third byte indicates the month (1 byte) and the fourth byte indicates the day (1 byte).

## 2. 20 “Measured instantaneous power consumption” property

This property indicates the instantaneous power consumption of device in watts. The value range for this property is from 0x0000 to 0xFFFD. When the property value of the actual device is higher than the upper bound of the value range, 0xFFFF (overflow code) shall be used. When the property value of the actual device is lower than the lower bound of the value range, 0xFFFE (underflow code) shall be used.

## 2. 21 “Measured cumulative electric energy consumption” property

This property indicates the cumulative electric energy consumption of device in increments of 0.001kW. The value range for this property is from 0x00000000 to 0x3B9AC9FF (from 0 to 999,999.999kWh). When a measured cumulative electric energy consumption overflow occurs, the



© 2000 - 2023 ECHONET Consortium

counting shall restart from 0x00000000.

## 2．22 “Power limit setting” property

This property contains the setting for the maximum consumable power (i.e. power limit setting). The value range for this property is from 0 to 65535 (from 0x0000 to 0xFFFF), and the unit is watt. In the case where it is not possible to limit the power consumption using the value specified by this property, the power consumption shall be limited using a value that is closest to and lower than the value specified by this property. A read value shall be one set in the equipment.



© 2000 - 2023 ECHONET Consortium

# Chapter3 **Detailed Requirements for Device Objects**

## 3．1 Sensor-related Device Class Group

This section specifies detailed codes and properties of each ECHONET object belonging to the sensor-related device class group (class group code X1 = 0x00). Table 3-1 shows a list of classes specified in detail in this section. “Mandatory” means that the device mounting each class must mount a combination of its property and service.

**Table 3-1　List of Objects of Sensor-related Device Class Group (1/2)**

| Group code | Class code | Class name | Whether or not detailed requirements are provided | Remarks |
|---|---|---|---|---|
| 0x00 | 0x00 | Reserved for future use | | |
| | 0x01 | Gas leak sensor | ○ | |
| | 0x02 | Crime prevention sensor | ○ | |
| | 0x03 | Emergency button | ○ | |
| | 0x04 | First-aid sensor | ○ | |
| | 0x05 | Earthquake sensor | ○ | |
| | 0x06 | Electric leak sensor | ○ | |
| | 0x07 | Human detection sensor | ○ | |
| | 0x08 | Visitor sensor | ○ | |
| | 0x09 | Call sensor | ○ | |
| | 0x0A | Condensation sensor | ○ | |
| | 0x0B | Air pollution sensor | ○ | |
| | 0x0C | Oxygen sensor | ○ | |
| | 0x0D | Illuminance sensor | ○ | |
| | 0x0E | Sound sensor | ○ | |
| | 0x0F | Mailing sensor | ○ | |
| | 0x10 | Weight sensor | ○ | |
| | 0x11 | Temperature sensor | ○ | |
| | 0x12 | Humidity sensor | ○ | |
| | 0x13 | Rain sensor | ○ | |
| | 0x14 | Water level sensor | ○ | |
| | 0x15 | Bath water level sensor | ○ | |
| | 0x16 | Bath heating status sensor | ○ | |
| | 0x17 | Water leak sensor | ○ | |
| | 0x18 | Water overflow sensor | ○ | |
| | 0x19 | Fire sensor | ○ | |
| | 0x1A | Cigarette smoke sensor | ○ | |
| | 0x1B | $CO_2$ sensor | ○ | |
| | 0x1C | Gas sensor | ○ | |



© 2000 - 2023 ECHONET Consortium

**List of Objects of Sensor-related Device Class Group (2/2)**

| Group code | Class code | Class name | Whether or not detailed requirements are provided | Remarks |
|---|---|---|---|---|
| 0x00 | 0x1D | VOC sensor | ○ | |
| | 0x1E | Differential pressure sensor | ○ | |
| | 0x1F | Air speed sensor | ○ | |
| | 0x20 | Odor sensor | ○ | |
| | 0x21 | Flame sensor | ○ | |
| | 0x22 | Electric energy sensor | ○ | |
| | 0x23 | Current sensor | ○ | |
| | 0x24 | Daylight sensor | | |
| | 0x25 | Water flow rate sensor | ○ | |
| | 0x26 | Micromotion sensor | ○ | |
| | 0x27 | Passage sensor | ○ | |
| | 0x28 | Bed presence sensor | ○ | |
| | 0x29 | Open/close sensor | ○ | |
| | 0x2A | Activity amount sensor | ○ | |
| | 0x2B | Human body location sensor | ○ | |
| | 0x2C | Snow sensor | ○ | |
| | 0x2D | Air pressure sensor | ○ | |
| | 0x2E to 0xFF | Reserved for future use | | |

Note: ○ indicates a detail is explained including a property structure in APPENDIX.



© 2000 - 2023 ECHONET Consortium

## 3. 1. 1 Requirements for gas leak sensor class

Class group code : 0x00

Class code : 0x01

Instance code : 0x01–0x7F (0x00: All-instance specification code)

| Property name | EPC | Contents of property | Data type | Data Size | Unit | Access rule | Man-datory | Announcement at status change | Remark |
|---|---|---|---|---|---|---|---|---|---|
| | | Value range (decimal notation) | | | | | | | |
| Operation status | 0x80 | This property indicates the ON/OFF status. | unsigned char | 1 byte | — | Set | | ○ | |
| | | ON=0x30, OFF=0x31 | | | | Get | ○ | | |
| Detection threshold level | 0xB0 | Specifies detection threshold level in 8 steps. | unsigned char | 1 byte | — | Set/ Get | | | |
| | | 0x31–0x38 | | | | | | | |
| Gas leak occurrence status | 0xB1 | This property indicates gas leak occurrence status. | unsigned char | 1 byte | — | Get | ○ | ○ | |
| | | Gas leak occurrence status found = 0x41<br>Gas leak occurrence status not found = 0x42 | | | | | | | |
| Gas leak occurrence status resetting | 0xBF | Resets gas leak occurrence status by setting 0x00. | unsigned char | 1 byte | — | Set | | | |
| | | Reset = 0x00 | | | | | | | |

Note: In the “Announcement at status change” column, ○ denotes mandatory processing when the property is implemented.

(1) Operation status (inherited from the device object super class property)

This property indicates whether the function native to this class is operating or not (ON/OFF). In the node mounting this class, if the function of this class is started concurrently with the start of node operation, this property may be implemented at a fixed value of 0x30 (Operation status ON).

(2) Detection threshold level

Sets the threshold value that causes EPC = 0xB1 “Gas leak occurrence status” to be set to “Found” (8-step). The minimum value is 0x31 and the maximum value is 0x38. No concrete value is specified for each level. If the detection threshold of the actual device is higher or lower than the 8-step range, the property of the actual device shall be assigned to the property value of the 8 steps specified in this property.

(3) Gas leak occurrence status

This property indicates whether a gas leak occurrence status is found or not. When EPC = 0xB0 “Detection threshold level” is implemented, this property is set to “Gas leak occurrence status found” if the threshold set by the detection threshold level is exceeded. When this property is set



© 2000 - 2023 ECHONET Consortium

to “Gas leak occurrence status found” = 0x41, it shall be announced periodically. This property shall be set to “Gas leak occurrence status not found” = 0x42 by resetting the main body or by EPC = 0xBF “Gas leak occurrence status resetting”.

(4) Gas leak occurrence status resetting

Resets EPC = 0xB1 “Gas leak occurrence status” by setting 0x00.



© 2000 - 2023 ECHONET Consortium

## 3．1．2 Requirements for crime prevention sensor class

Class group code : 0x00

Class code : 0x02

Instance code : 0x01–0x7F (0x00: All-instance specification code)

| Property name | EPC | Contents of property | Data type | Data size | Unit | Access rule | Man-datory | Announcement at status change | Remark |
|---|---|---|---|---|---|---|---|---|---|
| | | Value range (decimal notation) | | | | | | | |
| Operation status | 0x80 | This property indicates the ON/OFF status. | unsigned char | 1 byte | — | Set | | ○ | |
| | | ON=0x30, OFF=0x31 | | | | Get | ○ | | |
| Detection threshold level | 0xB0 | Specifies detection threshold level (8-step). | unsigned char | 1 byte | — | Set/Get | | | |
| | | 0x31–0x38 | | | | | | | |
| Invasion occurrence status | 0xB1 | This property indicates invasion occurrence status. | unsigned char | 1 byte | — | Get | ○ | ○ | |
| | | Invasion occurrence status found = 0x41<br>Invasion occurrence status not found = 0x42 | | | | | | | |
| Invasion occurrence status resetting | 0xBF | Resets invasion occurrence status by setting 0x00. | unsigned char | 1 byte | — | Set | | | |
| | | Reset = 0x00 | | | | | | | |

Note: In the “Announcement at status change” column, ○ denotes mandatory processing when the property is implemented.

(1) Operation status (inherited from the device object super class property)

This property indicates whether the function native to this class is operating or not (ON/OFF). In the node mounting this class, if the function of this class is started concurrently with the start of node operation, this property may be implemented at a fixed value of 0x30 (Operation status ON).

(2) Detection threshold level

Sets the threshold value that causes EPC = 0xB1 “Invasion occurrence status” to be set to “Found” (8-step). The minimum value is 0x31 and the maximum value is 0x38. No concrete value is specified for each level. If the detection threshold of the actual device is higher or lower than the 8-step range, the property of the actual device shall be assigned to the property value of the 8 steps specified in this property.

(3) Invasion occurrence status

This property indicates whether an invasion occurrence status is found or not. When EPC = 0xB0 “Detection threshold level” is implemented, this property is set to “Invasion occurrence status found” = 0x41 if the threshold set by the detection threshold level is exceeded. When this



© 2000 - 2023 ECHONET Consortium

property is set to “Invasion occurrence status found” = 0x41, it shall be announced periodically. This property shall be set to “Invasion occurrence status not found” = 0x42 by resetting the main body or by EPC = 0xBF “Invasion occurrence status resetting”.

(4) Invasion occurrence status resetting

Resets EPC = 0xB1 “Invasion occurrence status” by setting 0x00.



© 2000 - 2023 ECHONET Consortium

## 3．1．3 Requirements for emergency button class

Class group code : 0x00

Class code : 0x03

Instance code : 0x01–0x7F (0x00: All-instance specification code)

| Property name | EPC | Contents of property | Data type | Data size | Unit | Access rule | Man-datory | Announcement at status change | Remark |
|---|---|---|---|---|---|---|---|---|---|
| | | Value range (decimal notation) | | | | | | | |
| Operation status | 0x80 | This property indicates the ON/OFF status. | unsigned char | 1 byte | — | Set | | ○ | |
| | | ON=0x30, OFF=0x31 | | | | Get | ○ | | |
| Emergency occurrence status | 0xB1 | This property indicates emergency occurrence status. | unsigned char | 1 byte | — | Get | ○ | ○ | |
| | | Emergency occurrence status found = 0x41<br>Emergency occurrence status not found = 0x42 | | | | | | | |
| Emergency occurrence status resetting | 0xBF | Resets emergency occurrence status by setting 0x00. | unsigned char | 1 byte | — | Set | | | |
| | | Reset = 0x00 | | | | | | | |

Note: In the “Announcement at status change” column, ○ denotes mandatory processing when the property is implemented.

(1) Operation status (inherited from the device object super class property)

This property indicates whether the function native to this class is operating or not (ON/OFF). In the node mounting this class, if the function of this class is started concurrently with the start of node operation, this property may be implemented at a fixed value of 0x30 (Operation status ON).

(2) Emergency occurrence status

This property indicates whether an emergency occurrence status caused by pressing the emergency button is found or not. When this property is set to “Emergency occurrence status found” = 0x41, the property shall be announced periodically. This property shall be set to “Emergency occurrence status not found” = 0x42 by resetting the main body or by EPC = 0xBF “Emergency occurrence status resetting”.

(3) Emergency occurrence status resetting

Resets EPC = 0xB1 “Emergency occurrence status” by setting 0x00.



© 2000 - 2023 ECHONET Consortium

## 3. 1. 4 Requirements for first-aid sensor class

Class group code : 0x00

Class code : 0x04

Instance code : 0x01–0x7F (0x00: All-instance specification code)

| Property name | EPC | Contents of property | Data type | Data size | Unit | Access rule | Man-datory | Announce-ment at status change | Remark |
|---|---|---|---|---|---|---|---|---|---|
| | | Value range (decimal notation) | | | | | | | |
| Operation status | 0x80 | This property indicates the ON/OFF status. | unsigned char | 1 byte | — | Set | | ○ | |
| | | ON=0x30, OFF=0x31 | | | | Get | ○ | | |
| Detection threshold level | 0xB0 | Specifies detection threshold level (8-step). | unsigned char | 1 byte | — | Set/ Get | | | |
| | | 0x31–0x38 | | | | | | | |
| First-aid occurrence status | 0xB1 | This property indicates first-aid occurrence status. | unsigned char | 1 byte | — | Get | ○ | ○ | |
| | | First-aid occurrence status found = 0x41<br>First-aid occurrence status not found = 0x42 | | | | | | | |
| First-aid occurrence status resetting | 0xBF | Resets first-aid occurrence status by setting 0x00. | unsigned char | 1 byte | — | Set | | | |
| | | Reset = 0x00 | | | | | | | |

Note: In the “Announcement at status change” column, ○ denotes mandatory processing when the property is implemented.

(1) Operation status (inherited from the device object super class property)

This property indicates whether the function native to this class is operating or not (ON/OFF). In the node mounting this class, if the function of this class is started concurrently with the start of node operation, this property may be implemented at a fixed value of 0x30 (Operation status ON).

(2) Detection threshold level

Sets the threshold value that causes EPC = 0xB1 “First-aid occurrence status” to be set to “Found” (8-step). The minimum value is 0x31 and the maximum value is 0x38. No concrete value is specified for each level. If the detection threshold of the actual device is higher or lower than the 8-step range, the property of the actual device shall be assigned to the property value of the 8 steps specified in this property.

(3) First-aid occurrence status

This property indicates whether a first-aid occurrence status is found or not. When EPC = 0xB0 “Detection threshold level” is implemented, this property is set to “First-aid occurrence status



© 2000 - 2023 ECHONET Consortium

found" if the threshold set by the detection threshold level is exceeded.

When this property is set to "First-aid occurrence status found" = 0x41, the property shall be announced periodically. This property shall be set to "First-aid occurrence status not found" = 0x42 by resetting the main body or by EPC = 0xBF "First-aid occurrence status resetting".

(4) First-aid occurrence status resetting

Resets EPC = 0xB1 "First-aid occurrence status" by setting 0x00.



© 2000 - 2023 ECHONET Consortium

## 3．1．5 Requirements for earthquake sensor class

Class group code : 0x00

Class code : 0x05

Instance code : 0x01–0x7F (0x00: All-instance specification code)

| Property name | EPC | Contents of property<br>Value range (decimal notation) | Data type | Data size | Unit | Access rule | Man-datory | Announcement at status change | Remark |
|---|---|---|---|---|---|---|---|---|---|
| Operation status | 0x80 | This property indicates the ON/OFF status.<br>ON=0x30, OFF=0x31 | unsigned char | 1 byte | — | Set<br>Get | <br>○ | ○ | |
| Detection threshold level | 0xB0 | Specifies detection threshold level (8-step).<br>0x31–0x38 | unsigned char | 1 byte | — | Set/ Get | | | |
| Earthquake occurrence status | 0xB1 | This property indicates earthquake occurrence status.<br>Earthquake occurrence status found = 0x41<br>Earthquake occurrence status not found = 0x42 | unsigned char | 1 byte | — | Get | ○ | ○ | |
| Earthquake occurrence status resetting | 0xBF | Resets earthquake occurrence status by setting 0x00.<br>Reset = 0x00 | unsigned char | 1 byte | — | Set | | | |
| SI value | 0xC0 | This property indicates SI value in 0.1 kine.<br>0x0000–0xFFFD (0.0 kine–6553.3 kine) | unsigned short | 2 bytes | 0.1 kine | Get | | ○ | |
| SI value resetting | 0xC1 | Resets “SI value” by setting 0x00.<br>Reset = 0x00 | unsigned char | 1 byte | — | Set | | | |
| Collapse occurrence status | 0xC2 | This property indicates a status in which collapse has occurred.<br>Collapse occurred=0x41, No collapse has occurred=0x42 | unsigned char | 1 byte | — | Get | | ○ | |
| Collapse occurrence status resetting | 0xC3 | Resets “collapse occurrence status” by setting 0x00.<br>Reset = 0x00 | unsigned char | 1 byte | — | Set | | | |

Note: In the “Announcement at status change” column, ○ denotes mandatory processing when the property is implemented.

(1) Operation status (inherited from the device object super class property)

This property indicates whether the function native to this class is operating or not (ON/OFF). In the node mounting this class, if the function of this class is started concurrently with the start of node operation, this property may be implemented at a fixed value of 0x30 (Operation status ON).

(2) Detection threshold level



© 2000 - 2023 ECHONET Consortium

Sets the threshold value that causes EPC = 0xB1 “Earthquake occurrence status” to be set to “Found” (8-step). The minimum value is 0x31 and the maximum value is 0x38. No concrete value is specified for each level. If the detection threshold of the actual device is higher or lower than the 8-step range, the property of the actual device shall be assigned to the property value of the 8 steps specified in this property.

(3) Earthquake occurrence status

This property indicates whether an earthquake occurrence status is found or not. When EPC = 0xB0 “Detection threshold level” is implemented, this property is set to “Earthquake occurrence status found” if the threshold set by the detection threshold level is exceeded.

When this property is set to “Earthquake occurrence status found” = 0x41, the property shall be announced periodically. This property shall be set to “Earthquake occurrence status not found” = 0x42 by resetting the main body or by EPC = 0xBF “Earthquake occurrence status resetting”.

(4) Earthquake occurrence status resetting

Resets EPC = 0xB1 “Earthquake occurrence status” by setting 0x00.

(5) SI value

This property indicates SI value in 0.1 kine. The property value range shall be 0x0000 to 0xFFFD (0.0 kine to 6553.3 kine). When the property value of the actual piece of equipment is higher than the upper limit of the property value range, the overflow code 0xFFFF shall be used. When the property value is lower than the lower limit of the property value range, the underflow code 0xFFFE shall be used.

(6) SI value resetting

Resets EPC = 0xC0 “SI value” by setting 0x00.

(7) Collapse occurrence status

This property indicates whether a collapse occurrence status is found or not. When this property is set to “collapse occurred” = 0x41, it shall be announced periodically. This property shall be set to “no collapse occurred” = 0x42 by resetting the main body or by EPC = 0xC3 “Collapse occurrence status resetting”.

(8) Collapse occurrence status resetting

Resets EPC = 0xC2 “Collapse occurrence status” by setting 0x00.



© 2000 - 2023 ECHONET Consortium

## 3．1．6 Requirements for electric leak sensor class

Class group code : 0x00

Class code : 0x06

Instance code : 0x01–0x7F (0x00: All-instance specification code)

| Property name | EPC | Contents of property | Data type | Data size | Unit | Access rule | Man-datory | Announcement at status change | Remark |
|---|---|---|---|---|---|---|---|---|---|
| | | Value range (decimal notation) | | | | | | | |
| Operation status | 0x80 | This property indicates the ON/OFF status. | unsigned char | 1 byte | — | Set | | ○ | |
| | | ON=0x30, OFF=0x31 | | | | Get | ○ | | |
| Detection threshold level | 0xB0 | Specifies detection threshold level (8-step). | unsigned char | 1 byte | — | Set/ Get | | | |
| | | 0x31–0x38 | | | | | | | |
| Electric leak occurrence status | 0xB1 | This property indicates leak occurrence status. | unsigned char | 1 byte | — | Get | ○ | ○ | |
| | | Electric leak occurrence status found = 0x41<br>Electric leak occurrence status not found = 0x42 | | | | | | | |
| Electric leak occurrence status resetting | 0xBF | Resets electric leak occurrence status by setting 0x00. | unsigned char | 1 byte | — | Set | | | |
| | | Reset = 0x00 | | | | | | | |

Note: In the “Announcement at status change” column, ○ denotes mandatory processing when the property is implemented.

(1) Operation status (inherited from the device object super class property)

This property indicates whether the function native to this class is operating or not (ON/OFF). In the node mounting this class, if the function of this class is started concurrently with the start of node operation, this property may be implemented at a fixed value of 0x30 (Operation status ON).

(2) Detection threshold level

Sets the threshold value that causes EPC = 0xB1 “Electric leak occurrence status” to be set to “Found” (8-step). The minimum value is 0x31 and the maximum value is 0x38. No concrete value is specified for each level. If the detection threshold of the actual device is higher or lower than the 8-step range, the property of the actual device shall be assigned to the property value of the 8 steps specified in this property.

(3) Electric leak occurrence status

This property indicates whether an electric leak occurrence status is found or not. When EPC = 0xB0 “Detection threshold level” is implemented, this property is set to “Electric leak occurrence status found” if the threshold set by the detection threshold level is exceeded. When



© 2000 - 2023 ECHONET Consortium

this property is set to “Electric leak occurrence status found” = 0x41, the property shall be announced periodically. This property shall be set to “Electric leak occurrence status not found” = 0x42 by resetting the main body or by EPC = 0xBF “Electric leak occurrence status resetting”.

(4) Electric leak occurrence status resetting

Resets EPC = 0xB1 “Electric leak occurrence status” by setting 0x00.



© 2000 - 2023 ECHONET Consortium

## 3．1．7 Requirements for human detection sensor class

Class group code : 0x00

Class code : 0x07

Instance code : 0x01–0x7F (0x00: All-instance specification code)

| Property name | EPC | Contents of property | Data type | Data size | Unit | Access rule | Man-datory | Announcement at status change | Remark |
|---|---|---|---|---|---|---|---|---|---|
| | | Value range (decimal notation) | | | | | | | |
| Operation status | 0x80 | This property indicates the ON/OFF status | unsigned char | 1 byte | – | Set | | ○ | |
| | | ON=0x30, OFF=0x31 | | | | Get | ○ | | |
| Detection threshold level | 0xB0 | Specifies detection threshold level (8-step). | unsigned char | 1 byte | – | Set/Get | | | |
| | | 0x31–0x38 | | | | | | | |
| Human detection status | 0xB1 | This property indicates human detection status. | unsigned char | 1 byte | – | Get | ○ | ○ | |
| | | Human detection status found = 0x41<br>Human detection status not found = 0x42 | | | | | | | |

Note: In the “Announcement at status change” column, ○ denotes mandatory processing when the property is implemented.

(1) Operation status (inherited from the device object super class property)

This property indicates whether the function native to this class is operating or not (ON/OFF). In the node mounting this class, if the function of this class is started concurrently with the start of node operation, this property may be implemented at a fixed value of 0x30 (Operation status ON).

(2) Detection threshold level

Sets the threshold value that causes EPC = 0xB1 “Human detection status” to be set to “Found” (8-step). The minimum value is 0x31 and the maximum value is 0x38. No concrete value is specified for each level. If the detection threshold of the actual device is higher or lower than the 8-step range, the property of the actual device shall be assigned to the property value of the 8 steps specified in this property.

(3) Human detection status

This property indicates whether a human detection status is found or not. When EPC = 0xB0 “Detection threshold level” is implemented, this property is set to “Human detection status found” if the threshold set by the detection threshold level is exceeded, and is set to “Human detection status not found” if the detection threshold value is not reached.



© 2000 - 2023 ECHONET Consortium

## 3．1．8 Requirements for visitor sensor class

Class group code : 0x00

Class code : 0x08

Instance code : 0x01–0x7F (0x00: All-instance specification code)

| Property name | EPC | Contents of property | Data type | Data size | Unit | Access rule | Man-datory | Announcement at status change | Remark |
|---|---|---|---|---|---|---|---|---|---|
| | | Value range (decimal notation) | | | | | | | |
| Operation status | 0x80 | This property indicates the ON/OFF status. | unsigned char | 1 byte | – | Set | | ○ | |
| | | ON=0x30, OFF=0x31 | | | | Get | ○ | | |
| Detection threshold level | 0xB0 | Specifies detection threshold level (8-step). | unsigned char | 1 byte | – | Set/Get | | | |
| | | 0x31–0x38 | | | | | | | |
| Visitor detection status | 0xB1 | This property indicates visitor detection status. | unsigned char | 1 byte | – | Get | ○ | ○ | |
| | | Visitor detection status found = 0x41<br>Visitor detection status not found = 0x42 | | | | | | | |
| Visitor detection holding time | 0xBE | This property indicates visitor detection holding time in units of 10 seconds. | unsigned short | 2 bytes | 10 sec | Set/Get | | | |
| | | 0x0000–0xFFFD<br>(0 sec.–655,330 sec.) | | | | | | | |

Note: In the “Announcement at status change” column, ○ denotes mandatory processing when the property is implemented.

(1) Operation status (inherited from the device object super class property)

This property indicates whether the function native to this class is operating or not (ON/OFF). In the node mounting this class, if the function of this class is started concurrently with the start of node operation, this property may be implemented at a fixed value of 0x30 (Operation status ON).

(2) Detection threshold level

Sets the threshold value that causes EPC = 0xB1 “Visitor detection status” to be set to “Found” (8-step). The minimum value is 0x31 and the maximum value is 0x38. No concrete value is specified for each level. If the detection threshold of the actual device is higher or lower than the 8-step range, the property of the actual device shall be assigned to the property value of the 8 steps specified in this property.

(3) Visitor detection status

This property indicates whether a visitor detection status is found or not. When EPC = 0xB0 “Detection threshold level” is implemented, this property is set to “Visitor detection status



© 2000 - 2023 ECHONET Consortium

found" if the threshold set by the detection threshold level is exceeded. When this property is set to "Visitor detection status found" = 0x41, the property shall be announced periodically.

(4) Visitor detection holding time

This property indicates the time from start of "Visitor detection status found" to return to "Visitor detection status not found" in units of 10 seconds. The property value range shall be 0x0000 to 0xFFFD (0 sec. to 655,330 sec.). If the property value of the actual device exceeds the property value range, the overflow code 0xFFFF shall be used.



© 2000 - 2023 ECHONET Consortium

## 3. 1. 9 Requirements for call sensor class

Class group code : 0x00

Class code : 0x09

Instance code : 0x01–0x7F (0x00: All-instance specification code)

| Property name | EPC | Contents of property | Data type | Data size | Unit | Access rule | Man-datory | Announcement at status change | Remark |
|---|---|---|---|---|---|---|---|---|---|
| | | Value range (decimal notation) | | | | | | | |
| Operation status | 0x80 | This property indicates the ON/OFF status. | unsigned char | 1 byte | – | Set | | ○ | |
| | | ON=0x30, OFF=0x31 | | | | Get | ○ | | |
| Detection threshold level | 0xB0 | Specifies detection threshold level (8-step). | unsigned char | 1 byte | – | Set/Get | | | |
| | | 0x31–0x38 | | | | | | | |
| Call status | 0xB1 | This property indicates call status. | unsigned char | 1 byte | – | Get | ○ | ○ | |
| | | Call status found = 0x41<br>Call status not found = 0x42 | | | | | | | |
| Call holding time | 0xBE | This property indicates the call holding time in units of 10 seconds. | unsigned short | 2 bytes | 10 sec | Set/Get | | | |
| | | 0x0000–0xFFFD<br>(0 sec.–655,300 sec.) | | | | | | | |

Note: In the “Announcement at status change” column, ○ denotes mandatory processing when the property is implemented.

(1) Operation status (inherited from the device object super class property)

This property indicates whether the function native to this class is operating or not (ON/OFF). In the node mounting this class, if the function of this class is started concurrently with the start of node operation, this property may be implemented at a fixed value of 0x30 (Operation status ON).

(2) Detection threshold level

Sets the threshold value that causes EPC = 0xB1 “Call status” to be set to “Found” (8-step). The minimum value is 0x31 and the maximum value is 0x38. No concrete value is specified for each level. If the detection threshold of the actual device is higher or lower than the 8-step range, the property of the actual device shall be assigned to the property value of the 8 steps specified in this property.

(3) Call status

This property indicates whether a call status is found or not. When EPC = 0xB0 “Detection threshold level” is implemented, this property is set to “Call status found” if the threshold set by the detection threshold level is exceeded. When this property is set to “Call status found” = 0x41, the property shall be announced periodically.



© 2000 - 2023 ECHONET Consortium

(4) Call holding time

This property indicates the time from start of “Call status found” to return to “Call status not found” in units of 10 seconds. The property value range shall be 0x0000 to 0xFFFD (0 sec. to 655.330 sec.). If the property value of the actual device exceeds the property value range, the overflow code 0xFFFF shall be used.



© 2000 - 2023 ECHONET Consortium

## 3. 1. 10 Requirements for condensation sensor class

Class group code : 0x00

Class code : 0x0A

Instance code : 0x01–0x7F (0x00: All-instance specification code)

| Property name | EPC | Contents of property | Data type | Data size | Unit | Access rule | Man-datory | Announcement at status change | Remark |
|---|---|---|---|---|---|---|---|---|---|
| | | Value range (decimal notation) | | | | | | | |
| Operation status | 0x80 | This property indicates the ON/OFF status. | unsigned char | 1 byte | – | Set | | ○ | |
| | | ON=0x30, OFF=0x31 | | | | Get | ○ | | |
| Detection threshold level | 0xB0 | Specifies detection threshold level (8-step). | unsigned char | 1 byte | – | Set/Get | | | |
| | | 0x31–0x38 | | | | | | | |
| Condensation detection status | 0xB1 | This property indicates condensation detection status. | unsigned char | 1 byte | – | Get | ○ | ○ | |
| | | Condensation detection status found = 0x41<br>Condensation detection status not found = 0x42 | | | | | | | |

Note: In the “Announcement at status change” column, ○ denotes mandatory processing when the property is implemented.

(1) Operation status (inherited from the device object super class property)

This property indicates whether the function native to this class is operating or not (ON/OFF). In the node mounting this class, if the function of this class is started concurrently with the start of node operation, this property may be implemented at a fixed value of 0x30 (Operation status ON).

(2) Detection threshold level

Sets the threshold value that causes EPC = 0xB1 “Condensation detection status” to be set to “Found” (8-step). The minimum value is 0x31 and the maximum value is 0x38. No concrete value is specified for each level. If the detection threshold of the actual device is higher or lower than the 8-step range, the property of the actual device shall be assigned to the property value of the 8 steps specified in this property.

(3) Condensation detection status

This property indicates whether a condensation detection status is found or not. When EPC = 0xB0 “Detection threshold level” is implemented, this property is set to “Condensation detection status found” if the threshold set by the detection threshold level is exceeded, and is set to “Condensation detection status not found” if the detection threshold value is not reached.



© 2000 - 2023 ECHONET Consortium

## 3. 1. 11 Requirements for air pollution sensor class

Class group code : 0x00

Class code : 0x0B

Instance code : 0x01–0x7F (0x00: All-instance specification code)

| Property name | EPC | Contents of property | Data type | Data size | Unit | Access rule | Man-datory | Announcement at status change | Remark |
|---|---|---|---|---|---|---|---|---|---|
| | | Value range (decimal notation) | | | | | | | |
| Operation status | 0x80 | This property indicates the ON/OFF status. | unsigned char | 1 byte | – | Set | | ○ | |
| | | ON=0x30, OFF=0x31 | | | | Get | ○ | | |
| Detection threshold level | 0xB0 | Specifies detection threshold level (8-step). | unsigned char | 1 byte | – | Set/Get | | | |
| | | 0x31–0x38 | | | | | | | |
| Air pollution detection status | 0xB1 | This property indicates air pollution detection status. | unsigned char | 1 byte | – | Get | ○ | ○ | |
| | | Air pollution detection status found = 0x41<br>Air pollution detection status not found = 0x42 | | | | | | | |

Note: In the “Announcement at status change” column, ○ denotes mandatory processing when the property is implemented.

(1) Operation status (inherited from the device object super class property)

This property indicates whether the function native to this class is operating or not (ON/OFF). In the node mounting this class, if the function of this class is started concurrently with the start of node operation, this property may be implemented at a fixed value of 0x30 (Operation status ON).

(2) Detection threshold level

Sets the threshold value that causes EPC = 0xB1 “Air pollution detection status” to be set to “Found” (8-step). The minimum value is 0x31 and the maximum value is 0x38. No concrete value is specified for each level. If the detection threshold of the actual device is higher or lower than the 8-step range, the property of the actual device shall be assigned to the property value of the 8 steps specified in this property.

(3) Air pollution detection status

This property indicates whether an air pollution detection status is found or not. When EPC = 0xB0 “Detection threshold level” is implemented, this property is set to “Air pollution detection status found” if the threshold set by the detection threshold level is exceeded, and is set to “Air pollution detection status not found” if the detection threshold value is not reached.



© 2000 - 2023 ECHONET Consortium

## 3. 1. 12 Requirements for oxygen sensor class

Class group code : 0x00

Class code : 0x0C

Instance code : 0x01–0x7F (0x00: All-instance specification code)

| Property name | EPC | Contents of property | Data type | Data size | Unit | Access rule | Man-datory | Announcement at status change | Remark |
|---|---|---|---|---|---|---|---|---|---|
| | | Value range (decimal notation) | | | | | | | |
| Operation status | 0x80 | This property indicates the ON/OFF status. | unsigned short | 1byte | — | Set | | ○ | |
| | | ON=0x30, OFF=0x31 | | | | Get | ○ | | |
| Measured value of oxygen concentration | 0xE0 | This property indicates measured value of oxygen concentration in units of 0.01%. | unsigned short | 2 bytes | 0.01% | Get | ○ | | |
| | | 0x0000–0x2710 (0.00–100.00%) | | | | | | | |

Note: In the “Announcement at status change” column, ○ denotes mandatory processing when the property is implemented.

(1) Operation status (inherited from the device object super class property)

This property indicates whether the function native to this class is operating or not (ON/OFF). In the node mounting this class, if the function of this class is started concurrently with the start of node operation, this property may be implemented at a fixed value of 0x30 (Operation status ON).

(2) Measured value of oxygen concentration

This property indicates the measured value of oxygen concentration in units of 0.01%. The property value range shall be 0x0000 to 0x2710 (0.00 to 100.00%). When the property value of the actual device exceeds this property value range, the overflow code 0xFFFF shall be used. When said value falls below the property value range, the underflow code 0xFFFE shall be used.



© 2000 - 2023 ECHONET Consortium

## 3. 1. 13 Requirements for illuminance sensor class

Class group code : 0x00

Class code : 0x0D

Instance code : 0x01–0x7F (0x00: All-instance specification code)

| Property name | EPC | Contents of property | Data type | Data size | Unit | Access rule | Man-datory | Announcement at status change | Remark |
|---|---|---|---|---|---|---|---|---|---|
| | | Value range (decimal notation) | | | | | | | |
| Operation status | 0x80 | This property indicates the ON/OFF status. | unsigned short | 1 byte | — | Set | | ○ | |
| | | ON=0x30, OFF=0x31 | | | | Get | ○ | | |
| Measured illuminance value 1 | 0xE0 | This property indicates measured illuminance value in lux. | unsigned short | 2 bytes | lux | Get | ○ | | Note1 |
| | | 0x0000–0xFFFD (0–65533 lux) | | | | | | | |
| Measured illuminance value 2 | 0xE1 | This property indicates measured illuminance value in kilo lux. | unsigned short | 2 bytes | klux | Get | ○ | | Note1 |
| | | 0x0000–0xFFFD (0–65533 klux) | | | | | | | |

Note: In the “Announcement at status change” column, ○ denotes mandatory processing when the property is implemented.

Either “Measured illuminance value 1 EPC:0xE0” or “Measured illuminance value 2 EPC:0xE1” is mandatorily implemented.

(1) Operation status (inherited from the device object super class property)

This property indicates whether the function native to this class is operating or not (ON/OFF). In the node mounting this class, if the function of this class is started concurrently with the start of node operation, this property may be implemented at a fixed value of 0x30 (Operation status ON).

(2) Measured illuminance value 1

This property indicates the measured illuminance value in lux. The property value range shall be 0x0000 to FFFD (0 to 65533 lux). When the property value of the actual device exceeds this property value range, the overflow code 0xFFFF shall be used. When said value falls below the property value range, the underflow code 0xFFFE shall be used.

(3) Measured illuminance value 2

This property indicates the measured illuminance value in kilo lux. The property value range shall be 0x0000 to FFFD (0 to 65533 klux). When the property value of the actual device exceeds this property value range, the overflow code 0xFFFF shall be used. When said value falls below the property value range, the underflow code 0xFFFE shall be used.



© 2000 - 2023 ECHONET Consortium

## 3. 1. 14 Requirements for sound sensor class

Class group code : 0x00

Class code : 0x0E

Instance code : 0x01–0x7F (0x00: All-instance specification code)

| Property name | EPC | Contents of property | Data type | Data size | Unit | Access rule | Man-datory | Announcement at status change | Remark |
|---|---|---|---|---|---|---|---|---|---|
| | | Value range (decimal notation) | | | | | | | |
| Operation status | 0x80 | This property indicates the ON/OFF status. | unsigned char | 1 byte | – | Set | | ○ | |
| | | ON=0x30, OFF=0x31 | | | | Get | ○ | | |
| Detection threshold level | 0xB0 | Specifies detection threshold level (8-step). | unsigned char | 1 byte | – | Set/Get | | | |
| | | 0x31–0x38 | | | | | | | |
| Sound detection status | 0xB1 | This property indicates sound detection status. | unsigned char | 1 byte | – | Get | ○ | ○ | |
| | | Sound detection status found = 0x41<br>Sound detection status not found = 0x42 | | | | | | | |
| Sound detection holding time | 0xBE | This property indicates sound detection holding time in units of 10 seconds. | unsigned short | 2 bytes | 10 sec | Set/Get | | | |
| | | 0x0000–0xFFFD<br>(0 sec.–655,330 sec.) | | | | | | | |

Note: In the “Announcement at status change” column, ○ denotes mandatory processing when the property is implemented.

(1) Operation status (inherited from the device object super class property)

This property indicates whether the function native to this class is operating or not (ON/OFF). In the node mounting this class, if the function of this class is started concurrently with the start of node operation, this property may be implemented at a fixed value of 0x30 (Operation status ON).

(2) Detection threshold level

Sets the threshold value that causes EPC = 0xB1 “Sound detection status” to be set to “Found” (8-step). The minimum value is 0x31 and the maximum value is 0x38. No concrete value is specified for each level. If the detection threshold of the actual device is higher or lower than the 8-step range, the property of the actual device shall be assigned to the property value of the 8 steps specified in this property.

(3) Sound detection status

This property indicates whether a sound detection status is found or not. When EPC = 0xB0 “Detection threshold level” is implemented, this property is set to “Sound detection status



© 2000 - 2023 ECHONET Consortium

found" if the threshold set by the detection threshold level is exceeded.

(4) Sound detection holding time

This property indicates the time from start of "Sound detection status found" to return to "Sound detection status not found" in units of 10 seconds. The property value range shall be 0x0000 to 0xFFFD (0 sec. to 655,330 sec.). If the property value of the actual device exceeds the property value range, the overflow code 0xFFFF shall be used.



© 2000 - 2023 ECHONET Consortium

## 3. 1. 15 Requirements for mailing sensor class

Class group code : 0x00

Class code : 0x0F

Instance code : 0x01–0x7F (0x00: All-instance specification code)

| Property name | EPC | Contents of property | Data type | Data size | Unit | Access rule | Man-datory | Announcement at status change | Remark |
|---|---|---|---|---|---|---|---|---|---|
| | | Value range (decimal notation) | | | | | | | |
| Operation status | 0x80 | This property indicates the ON/OFF status. | unsigned char | 1 byte | – | Set | | ○ | |
| | | ON=0x30, OFF=0x31 | | | | Get | ○ | | |
| Detection threshold level | 0xB0 | Specifies detection threshold level (8-step). | unsigned char | 1 byte | – | Set/Get | | | |
| | | 0x31–0x38 | | | | | | | |
| Mailing detection status | 0xB1 | This property indicates mailing detection status. | unsigned char | 1 byte | – | Get | ○ | ○ | |
| | | Mailing detection status found = 0x41<br>Mailing detection status not found = 0x42 | | | | | | | |

Note: In the “Announcement at status change” column, ○ denotes mandatory processing when the property is implemented.

(1) Operation status (inherited from the device object super class property)

This property indicates whether the function native to this class is operating or not (ON/OFF). In the node mounting this class, if the function of this class is started concurrently with the start of node operation, this property may be implemented at a fixed value of 0x30 (Operation status ON).

(2) Detection threshold level

Sets the threshold value that causes EPC = 0xB1 “Mailing detection status” to be set to “Found” (8-step). The minimum value is 0x31 and the maximum value is 0x38. No concrete value is specified for each level. If the detection threshold of the actual device is higher or lower than the 8-step range, the property of the actual device shall be assigned to the property value of the 8 steps specified in this property.

(3) Mailing detection status

This property indicates whether a mailing detection status is found or not. When EPC = 0xB0 “Detection threshold level” is implemented, this property is set to “Mailing detection status found” if the threshold set by the detection threshold level is exceeded, and is set to “Mailing detection status not found” if the detection threshold value is not reached.



© 2000 - 2023 ECHONET Consortium

## 3. 1. 16 Requirements for weight sensor class

Class group code : 0x00

Class code : 0x10

Instance code : 0x01–0x7F (0x00: All-instance specification code)

| Property name | EPC | Contents of property | Data type | Data size | Unit | Access rule | Man-datory | Announcement at status change | Remark |
|---|---|---|---|---|---|---|---|---|---|
| | | Value range (decimal notation) | | | | | | | |
| Operation status | 0x80 | This property indicates the ON/OFF status. | unsigned char | 1 byte | – | Set | | ○ | |
| | | ON=0x30, OFF=0x31 | | | | Get | ○ | | |
| Detection threshold level | 0xB0 | Specifies detection threshold level (8-step). | unsigned char | 1 byte | – | Set/Get | | | |
| | | 0x31–0x38 | | | | | | | |
| Weight detection status | 0xB1 | This property indicates weight detection status. | unsigned char | 1 byte | – | Get | ○ | ○ | |
| | | Weight detection status found = 0x41<br>Weight detection status not found = 0x42 | | | | | | | |

Note: In the “Announcement at status change” column, ○ denotes mandatory processing when the property is implemented.

(1) Operation status (inherited from the device object super class property)

This property indicates whether the function native to this class is operating or not (ON/OFF). In the node mounting this class, if the function of this class is started concurrently with the start of node operation, this property may be implemented at a fixed value of 0x30 (Operation status ON).

(2) Detection threshold level

Sets the threshold value that causes EPC = 0xB1 “Weight detection status” to be set to “Found” (8-step). The minimum value is 0x31 and the maximum value is 0x38. No concrete value is specified for each level. If the detection threshold of the actual device is higher or lower than the 8-step range, the property of the actual device shall be assigned to the property value of the 8 steps specified in this property.

(3) Weight detection status

This property indicates whether a weight detection status is found or not. When EPC = 0xB0 “Detection threshold level” is implemented, this property is set to “Weight detection status found” if the threshold set by the detection threshold level is exceeded, and is set to “Weight detection status not found” if the detection threshold value is not reached.



© 2000 - 2023 ECHONET Consortium

## 3. 1. 17 Requirements for temperature sensor class

Class group code : 0x00

Class code : 0x11

Instance code : 0x01–0x7F (0x00: All-instance specification code)

| Property name | EPC | Contents of property | Data type | Data size | Unit | Access rule | Man-datory | Announcement at status change | Remark |
|---|---|---|---|---|---|---|---|---|---|
| | | Value range (decimal notation) | | | | | | | |
| Operation status | 0x80 | This property indicates the ON/OFF status. | unsigned char | 1 byte | — | Set | | ○ | |
| | | ON=0x30, OFF=0x31 | | | | Get | ○ | | |
| Measured temperature value | 0xE0 | This property indicates the measured temperature value in units of 0.1°C. | signed short | 2 bytes | 0.1°C | Get | ○ | | |
| | | 0xF554–0x7FFE (-2732–32766) (-273.2–3276.6°C) | | | | | | | |

Note: In the “Announcement at status change” column, ○ denotes mandatory processing when the property is implemented.

(1) Operation status (inherited from the device object super class property)

This property indicates whether the function native to this class is operating or not (ON/OFF). In the node mounting this class, if the function of this class is started concurrently with the start of node operation, this property may be implemented at a fixed value of 0x30 (Operation status ON).

(2) Measured temperature value

This property indicates the measured temperature value in units of 0.1%. The property value range shall be 0xF554 to 0x7FFE (-273.2°C to 3276.6°C). When the property value of the actual device exceeds this property value range, the overflow code 0x7FFF shall be used. When said value falls below the property value range, the underflow code 0x8000 shall be used.



© 2000 - 2023 ECHONET Consortium

## 3. 1. 18 Requirements for humidity sensor class

Class group code : 0x00

Class code : 0x12

Instance code : 0x01–0x7F (0x00: All-instance specification code)

| Property name | EPC | Contents of property | Data type | Data size | Unit | Access rule | Man-datory | Announcement at status change | Remark |
|---|---|---|---|---|---|---|---|---|---|
| | | Value range (decimal notation) | | | | | | | |
| Operation status | 0x80 | This property indicates the ON/OFF status. | unsigned char | 1 byte | – | Set | | ○ | |
| | | ON=0x30, OFF=0x31 | | | | Get | ○ | | |
| Measured value of relative humidity | 0xE0 | This property indicates measured value of relative humidity in %. | unsigned char | 1 byte | % | Get | ○ | | |
| | | 0x00–0x64 (0–100%) | | | | | | | |

Note: In the “Announcement at status change” column, ○ denotes mandatory processing when the property is implemented.

(1) Operation status (inherited from the device object super class property)

This property indicates whether the function native to this class is operating or not (ON/OFF). In the node mounting this class, if the function of this class is started concurrently with the start of node operation, this property may be implemented at a fixed value of 0x30 (Operation status ON).

(2) Measured value of relative humidity

This property indicates the measured value of relative humidity in %. The property value range shall be 0x00 to 0x64 (0 to 100%). When the property value of the actual device exceeds this property value range, the overflow code 0xFF shall be used. When said value falls below the property value range, the underflow code 0xFE shall be used.



© 2000 - 2023 ECHONET Consortium

## 3. 1. 19 Requirements for rain sensor class

Class group code : 0x00

Class code : 0x13

Instance code : 0x01–0x7F (0x00: All-instance specification code)

| Property name | EPC | Contents of property | Data type | Data size | Unit | Access rule | Man-datory | Announcement at status change | Remark |
|---|---|---|---|---|---|---|---|---|---|
| | | Value range (decimal notation) | | | | | | | |
| Operation status | 0x80 | This property indicates the ON/OFF status. | unsigned char | 1 byte | – | Set | | ○ | |
| | | ON=0x30, OFF=0x31 | | | | Get | ○ | | |
| Detection threshold level | 0xB0 | Specifies detection threshold level (8-step). | unsigned char | 1 byte | – | Set/Get | | | |
| | | 0x31–0x38 | | | | | | | |
| Rain detection status | 0xB1 | This property indicates rain detection status. | unsigned char | 1 byte | – | Get | ○ | ○ | |
| | | Rain detection status found = 0x41<br>Rain detection status not found = 0x42 | | | | | | | |

Note: In the “Announcement at status change” column, ○ denotes mandatory processing when the property is implemented.

(1) Operation status (inherited from the device object super class property)

This property indicates whether the function native to this class is operating or not (ON/OFF). In the node mounting this class, if the function of this class is started concurrently with the start of node operation, this property may be implemented at a fixed value of 0x30 (Operation status ON).

(2) Detection threshold level

Sets the threshold value that causes EPC = 0xB1 “Rain detection status” to be set to “Found” (8-step). The minimum value is 0x31 and the maximum value is 0x38. No concrete value is specified for each level. If the detection threshold of the actual device is higher or lower than the 8-step range, the property of the actual device shall be assigned to the property value of the 8 steps specified in this property.

(3) Rain detection status

This property indicates whether a rain detection status is found or not. When EPC = 0xB0 “Detection threshold level” is implemented, this property is set to “Rain detection status found” if the threshold set by the detection threshold level is exceeded, and is set to “Rain detection status not found” if the detection threshold value is not reached.



© 2000 - 2023 ECHONET Consortium

## 3. 1. 20 Requirements for water level sensor class

Class group code : 0x00

Class code : 0x14

Instance code : 0x01–0x7F (0x00: All-instance specification code)

| Property name | EPC | Contents of property | Data type | Data size | Unit | Access rule | Man-datory | Announcement at status change | Remark |
|---|---|---|---|---|---|---|---|---|---|
| | | Value range (decimal notation) | | | | | | | |
| Operation status | 0x80 | This property indicates the ON/OFF status. | unsigned char | 1 byte | – | Set | | ○ | |
| | | ON=0x30, OFF=0x31 | | | | Get | ○ | | |
| Water level over detection threshold level | 0xB0 | This property indicates the water level over detection threshold level in cm. | unsigned char | 1 byte | cm | Get | | | |
| | | 0x00–0xFD (0–253) | | | | | | | |
| Water level over detection status | 0xB1 | This property indicates if the water level exceeds detected water level threshold level. | unsigned char | 1 byte | – | Get | | ○ | |
| | | Water level over detection status found = 0x41<br>Water level over detection status not found = 0x42 | | | | | | | |
| Measured value of water level | 0xE0 | This property indicates measured value of water level in cm. | unsigned char | 1 byte | cm | Get | ○ | | |
| | | 0x00–0xFD (0–253) | | | | | | | |

Note: In the “Announcement at status change” column, ○ denotes mandatory processing when the property is implemented.

(1) Operation status (inherited from the device object super class property)

This property indicates whether the function native to this class is operating or not (ON/OFF). In the node mounting this class, if the function of this class is started concurrently with the start of node operation, this property may be implemented at a fixed value of 0x30 (Operation status ON).

(2) Water level over detection threshold level

Sets the water level threshold that causes EPC = 0xB1 to be set to “Water level over detection status” in cm.

(3) Water level over detection status

This property indicates whether a water level over detection status is found or not. When EPC = 0xB0 “Detected water level threshold level” is implemented, this property is set to “Water level over detection status found” if the threshold set by the detected water level threshold level is exceeded, and is set to “Water level over detection status not found” if the detection threshold value is not reached.



© 2000 - 2023 ECHONET Consortium

(4) Measured value of water level

This property indicates the measured value of water level in cm. The property value range shall be 0x00 to 0xFD (0 to 253 cm). When the property value of the actual device exceeds this property value range, the overflow code 0xFF shall be used. When said value falls below the property value range, the underflow code 0xFE shall be used.



© 2000 - 2023 ECHONET Consortium

# 3. 1. 21 Requirements for bath water level sensor class

Class group code : 0x00

Class code : 0x15

Instance code : 0x01–0x7F (0x00: All-instance specification code)

| Property name | EPC | Contents of property | Data type | Data size | Unit | Access rule | Man-datory | Announcement at status change | Remark |
|---|---|---|---|---|---|---|---|---|---|
| | | Value range (decimal notation) | | | | | | | |
| Operation status | 0x80 | This property indicates the ON/OFF status. | unsigned char | 1 byte | – | Set | | ○ | |
| | | ON=0x30, OFF=0x31 | | | | Get | ○ | | |
| Bath water level over detection threshold level | 0xB0 | This property indicates the bath water level over detection threshold level in cm. | unsigned char | 1 byte | cm | Get | | | |
| | | 0x00–0xFD (0–253) | | | | | | | |
| Bath water level over detection status | 0xB1 | This property indicates if bath water level exceeds detection water level threshold level. | unsigned char | 1 byte | – | Get | | ○ | |
| | | Water level over detection status found = 0x41<br>Water level over detection status not found = 0x42 | | | | | | | |
| Measured value of bath water level | 0xE0 | This property indicates measured value of bath water level in cm. | unsigned char | 1 byte | cm | Get | ○ | | |
| | | 0x00–0xFD (0–253) | | | | | | | |

Note: In the “Announcement at status change” column, ○ denotes mandatory processing when the property is implemented.

(1) Operation status (inherited from the device object super class property)

This property indicates whether the function native to this class is operating or not (ON/OFF). In the node mounting this class, if the function of this class is started concurrently with the start of node operation, this property may be implemented at a fixed value of 0x30 (Operation status ON).

(2) Bath water level over detection threshold level

Sets the water level threshold that causes EPC = 0xB1 to be set to “Bath water level over detection status” in cm.

(3) Bath water level over detection status

This property indicates whether a predetermined bath water level is exceeded or not. When the “Bath water level over detection threshold level” (EPC = 0xB0) is implemented, the status changes to “Water level over detection status found” when the threshold value set by the “Water level over detection threshold level” is exceeded. When the water level is lower than the threshold level, the status changes to “Water level over detection status not found”.



© 2000 - 2023 ECHONET Consortium

(4) Measured value of bath water level

This property indicates the measured value of bath water level in cm. The property value range shall be 0x00 to 0xFD (0 to 253 cm). When the property value of the actual device exceeds this property value range, the overflow code 0xFF shall be used. When said value falls below the property value range, the underflow code 0xFE shall be used.



© 2000 - 2023 ECHONET Consortium

## 3. 1. 22 Requirements for bath heating status sensor class

Class group code : 0x00

Class code : 0x16

Instance code : 0x01–0x7F (0x00: All-instance specification code)

| Property name | EPC | Contents of property | Data type | Data size | Unit | Access rule | Man-datory | Announcement at status change | Remark |
|---|---|---|---|---|---|---|---|---|---|
| | | Value range (decimal notation) | | | | | | | |
| Operation status | 0x80 | This property indicates the ON/OFF status. | unsigned char | 1 byte | – | Set | | ○ | |
| | | ON=0x30, OFF=0x31 | | | | Get | ○ | | |
| Detection threshold level | 0xB0 | Specifies detection threshold level (8-step). | unsigned char | 1 byte | – | Set/Get | | | |
| | | Level 0x31 to 0x38 | | | | | | | |
| Bath heating detection status | 0xB1 | This property indicates bath heating detection status. | unsigned char | 1 byte | – | Get | ○ | ○ | |
| | | Bath heating detection status found = 0x41<br>Bath heating detection status not found = 0x42 | | | | | | | |

Note: In the “Announcement at status change” column, ○ denotes mandatory processing when the property is implemented.

(1) Operation status (inherited from the device object super class property)

This property indicates whether the function native to this class is operating or not (ON/OFF). In the node mounting this class, if the function of this class is started concurrently with the start of node operation, this property may be implemented at a fixed value of 0x30 (Operation status ON).

(2) Detection threshold level

Sets the threshold value that causes EPC = 0xB1 “Bath heating detection status” to be set to “Found” (8-step). The minimum value is 0x31 and the maximum value is 0x38. No concrete value is specified for each level. If the detection threshold of the actual device is higher or lower than the 8-step range, the property of the actual device shall be assigned to the property value of the 8 steps specified in this property.

(3) Bath heating detection status

This property indicates whether a bath heating detection status is found or not. When EPC = 0xB0 “Detection threshold level” is implemented, this property is set to “Bath heating detection status found” if the threshold set by the detection threshold level is exceeded, and is set to “Bath heating detection status not found” if the detection threshold value is not reached. When this property is set to “Bath heating detection status found” = 0x41, the property shall be announced



© 2000 - 2023 ECHONET Consortium

periodically.



© 2000 - 2023 ECHONET Consortium

# 3. 1. 23 Requirements for water leak sensor class

Class group code : 0x00

Class code : 0x17

Instance code : 0x01–0x7F (0x00: All-instance specification code)

| Property name | EPC | Contents of property | Data type | Data size | Unit | Access rule | Man-datory | Announcement at status change | Remark |
|---|---|---|---|---|---|---|---|---|---|
| | | Value range (decimal notation) | | | | | | | |
| Operation status | 0x80 | This property indicates the ON/OFF status. | unsigned char | 1 byte | – | Set | | ○ | |
| | | ON=0x30, OFF=0x31 | | | | Get | ○ | | |
| Detection threshold level | 0xB0 | Specifies detection threshold level (8-step). | unsigned char | 1 byte | – | Set/Get | | | |
| | | 0x31–0x38 | | | | | | | |
| Water leak detection status | 0xB1 | This property indicates water leak detection status | unsigned char | 1 byte | – | Get | ○ | ○ | |
| | | Water leak detection status found = 0x41<br>Water leak detection status not found = 0x42 | | | | | | | |

Note: In the “Announcement at status change” column, ○ denotes mandatory processing when the property is implemented.

(1) Operation status (inherited from the device object super class property)

This property indicates whether the function native to this class is operating or not (ON/OFF). In the node mounting this class, if the function of this class is started concurrently with the start of node operation, this property may be implemented at a fixed value of 0x30 (Operation status ON).

(2) Detection threshold level

Sets the threshold value that causes EPC = 0xB1 “Water leak detection status” to be set to “Found” (8-step). The minimum value is 0x31 and the maximum value is 0x38. No concrete value is specified for each level. If the detection threshold of the actual device is higher or lower than the 8-step range, the property of the actual device shall be assigned to the property value of the 8 steps specified in this property.

(3) Water leak detection status

This property indicates whether a water leak detection status is found or not. When EPC = 0xB0“Detection threshold level” is implemented, this property is set to “Water leak detection status found” if the threshold set by the detection threshold level is exceeded, and is set to “Water leak detection status not found” if the detection threshold value is not reached. When this property is set to “Water leak detection status found” = 0x41, it shall be announced periodically.



© 2000 - 2023 ECHONET Consortium

## 3. 1. 24 Requirements for water overflow sensor class

Class group code : 0x00

Class code : 0x18

Instance code : 0x01–0x7F (0x00: All-instance specification code)

| Property name | EPC | Contents of property | Data type | Data size | Unit | Access rule | Man-datory | Announcement at status change | Remark |
|---|---|---|---|---|---|---|---|---|---|
| | | Value range (decimal notation) | | | | | | | |
| Operation status | 0x80 | This property indicates the ON/OFF status. | unsigned char | 1 byte | – | Set | | ○ | |
| | | ON=0x30, OFF=0x31 | | | | Get | ○ | | |
| Detection threshold level | 0xB0 | Specifies detection threshold level (8-step). | unsigned char | 1 byte | – | Set/Get | | | |
| | | 0x31–0x38 | | | | | | | |
| Water overflow detection status | 0xB1 | This property indicates water overflow status. | unsigned char | 1 byte | – | Get | ○ | ○ | |
| | | Water overflow detection status found = 0x41<br>Water overflow detection status not found = 0x42 | | | | | | | |

Note: In the “Announcement at status change” column, ○ denotes mandatory processing when the property is implemented.

(1) Operation status (inherited from the device object super class property)

This property indicates whether the function native to this class is operating or not (ON/OFF). In the node mounting this class, if the function of this class is started concurrently with the start of node operation, this property may be implemented at a fixed value of 0x30 (Operation status ON).

(2) Detection threshold level

Sets the threshold value that causes EPC = 0xB1 “Water overflow detection status” to be set to “Found” (8-step). The minimum value is 0x31 and the maximum value is 0x38. No concrete value is specified for each level. If the detection threshold of the actual device is higher or lower than the 8-step range, the property of the actual device shall be assigned to the property value of the 8 steps specified in this property.

(3) Water overflow detection status

This property indicates whether a water overflow detection status is found or not. When EPC = 0xB0 “Detection threshold level” is implemented, this property is set to “Water overflow detection status found” if the threshold set by the detection threshold level is exceeded, and is set to “Water overflow detection status not found” if the detection threshold value is not reached. When this property is set to “Water overflow detection status found” = 0x41, the property shall



© 2000 - 2023 ECHONET Consortium

be announced periodically.



© 2000 - 2023 ECHONET Consortium

## 3. 1. 25 Requirements for fire sensor class

Class group code : 0x00

Class code : 0x19

Instance code : 0x01–0x7F (0x00: All-instance specification code)

| Property name | EPC | Contents of property | Data type | Data size | Unit | Access rule | Man-datory | Announcement at status change | Remark |
|---|---|---|---|---|---|---|---|---|---|
| | | Value range (decimal notation) | | | | | | | |
| Operation status | 0x80 | This property indicates the ON/OFF status. | unsigned char | 1 byte | — | Set | | ○ | |
| | | ON=0x30, OFF=0x31 | | | | Get | ○ | | |
| Detection threshold level | 0xB0 | Specifies detection threshold level (8-step). Concrete status of each level is not specified. | unsigned char | 1 byte | – | Set/Get | | | |
| | | Level 0x31–0x38 | | | | | | | |
| Fire occurrence detection status | 0xB1 | This property indicates fire occurrence detection status. | unsigned char | 1 byte | – | Get | ○ | ○ | |
| | | Fire occurrence detection status found = 0x41<br>Fire occurrence detection status not found = 0x42 | | | | | | | |
| Fire occurrence detection status resetting | 0xBF | Resets fire occurrence detection status by setting 0x00. | unsigned char | 1 byte | – | Set | | | |
| | | Reset = 0x00 | | | | | | | |

Note: In the “Announcement at status change” column, ○ denotes mandatory processing when the property is implemented.

(1) Operation status (inherited from the device object super class property)

This property indicates whether the function native to this class is operating or not (ON/OFF). In the node mounting this class, if the function of this class is started concurrently with the start of node operation, this property may be implemented at a fixed value of 0x30 (Operation status ON).

(2) Detection threshold level

Sets the threshold value that causes EPC = 0xB1 “Fire occurrence detection status” to be set to “Found” (8-step). The minimum value is 0x31 and the maximum value is 0x38. No concrete value is specified for each level. If the detection threshold of the actual device is higher or lower than the 8-step range, the property of the actual device shall be assigned to the property value of the 8 steps specified in this property.

(3) Fire occurrence detection status

This property indicates whether a fire occurrence status is found or not. When EPC = 0xB0 “Detection threshold level” is implemented, this property is set to “Fire occurrence detection



© 2000 - 2023 ECHONET Consortium

status found" = 0x41 if the threshold set by the detection threshold level is exceeded. This property shall be set to "Fire occurrence detection status not found" = 0x42 by resetting the main body or by EPC = 0xBF "Fire occurrence detection status resetting".

(4) Fire occurrence detection status resetting

Resets EPC = 0xB1 "Fire occurrence detection status" by setting 0x00.



© 2000 - 2023 ECHONET Consortium

# 3. 1. 26 Requirements for cigarette smoke sensor class

Class group code : 0x00

Class code : 0x1A

Instance code : 0x01–0x7F (0x00: All-instance specification code)

| Property name | EPC | Contents of property | Data type | Data size | Unit | Access rule | Man-datory | Announcement at status change | Remark |
|---|---|---|---|---|---|---|---|---|---|
| | | Value range (decimal notation) | | | | | | | |
| Operation status | 0x80 | This property indicates the ON/OFF status. | unsigned char | 1 byte | — | Set | | ○ | |
| | | ON=0x30, OFF=0x31 | | | | Get | ○ | | |
| Detection threshold level | 0xB0 | Specifies detection threshold level (8-step). Concrete status of each level is not specified. | unsigned char | 1 byte | – | Set/Get | | | |
| | | Level 0x31–0x38 | | | | | | | |
| Smoke (cigarette) detection status | 0xB1 | This property indicates smoke (cigarette) detection status. | unsigned char | 1 byte | – | Get | ○ | ○ | |
| | | Smoke (cigarette) detection status found = 0x41<br>Smoke (cigarette) detection status not found = 0x42 | | | | | | | |

Note: In the “Announcement at status change” column, ○ denotes mandatory processing when the property is implemented.

(1) Operation status (inherited from the device object super class property)

This property indicates whether the function native to this class is operating or not (ON/OFF). In the node mounting this class, if the function of this class is started concurrently with the start of node operation, this property may be implemented at a fixed value of 0x30 (Operation status ON).

(2) Detection threshold level

Sets the threshold value that causes EPC = 0xB1 “Smoke (cigarette) detection status” to be set to “Found” (8-step). The minimum value is 0x31 and the maximum value is 0x38. No concrete value is specified for each level. If the detection threshold of the actual device is higher or lower than the 8-step range, the property of the actual device shall be assigned to the property value of the 8 steps specified in this property.

(3) Smoke (cigarette) detection status

This property indicates whether a smoke (cigarette) detection status is found or not. When EPC = 0xB0 “Detection threshold level” is implemented, this property is set to “Smoke (cigarette) detection status found” if the threshold set by the detection threshold level is exceeded, and is set to “Smoke (cigarette) detection status not found” if the detection threshold value is not reached.



© 2000 - 2023 ECHONET Consortium

## 3. 1. 27 Requirements for $CO_2$ sensor class

Class group code : 0x00

Class code : 0x1B

Instance code : 0x01–0x7F (0x00: All-instance specification code)

| Property name | EPC | Contents of property | Data type | Data size | Unit | Access rule | Man-datory | Announcement at status change | Remark |
|---|---|---|---|---|---|---|---|---|---|
| | | Value range (decimal notation) | | | | | | | |
| Operation status | 0x80 | This property indicates the ON/OFF status. | unsigned char | 1 byte | — | Set | | ○ | |
| | | ON=0x30, OFF=0x31 | | | | Get | ○ | | |
| Measured value of CO2 concentration | 0xE0 | This property indicates measured value of $CO_2$ concentration in ppm. | unsigned short | 2 bytes | ppm | Get | ○ | | |
| | | 0x0000–0xFFFD (0–65533) | | | | | | | |

Note: In the "Announcement at status change" column, ○ denotes mandatory processing when the property is implemented.

(1) Operation status (inherited from the device object super class property)

This property indicates whether the function native to this class is operating or not (ON/OFF). In the node mounting this class, if the function of this class is started concurrently with the start of node operation, this property may be implemented at a fixed value of 0x30 (Operation status ON).

(2) Measured value of $CO_2$ concentration

This property indicates the measured value of $CO_2$ concentration in ppm. The property value range shall be 0x0000 to 0xFFFD (0 to 65533 ppm). When the property value of the actual device exceeds this property value range, the overflow code 0xFFFF shall be used. When said value falls below the property value range, the underflow code 0xFFFE shall be used.



© 2000 - 2023 ECHONET Consortium

## 3. 1. 28 Requirements for gas sensor class

Class group code : 0x00

Class code : 0x1C

Instance code : 0x01–0x7F (0x00: All-instance specification code)

| Property name | EPC | Contents of property | Data type | Data size | Unit | Access rule | Man-datory | Announcement at status change | Remark |
|---|---|---|---|---|---|---|---|---|---|
| | | Value range (decimal notation) | | | | | | | |
| Operation status | 0x80 | This property indicates the ON/OFF status. | unsigned char | 1 byte | — | Set | | ○ | |
| | | ON=0x30, OFF=0x31 | | | | Get | ○ | | |
| Detection threshold level | 0xB0 | Specifies detection threshold level (8-step). | unsigned char | 1 byte | – | Set/Get | | | |
| | | 0x31–0x38 | | | | | | | |
| Gas detection status | 0xB1 | This property indicates gas detection status. | unsigned char | 1 byte | – | Get | | ○ | |
| | | Gas detection status found = 0x41<br>Gas detection status not found = 0x42 | | | | | | | |
| Measured value of gas concentration | 0xE0 | This property indicates measured value of gas concentration in ppm. | unsigned short | 2 bytes | ppm | Get | ○ | | |
| | | 0x0000–0xFFFD (0–65533) | | | | | | | |

Note: In the “Announcement at status change” column, ○ denotes mandatory processing when the property is implemented.

(1) Operation status (inherited from the device object super class property)

This property indicates whether the function native to this class is operating or not (ON/OFF). In the node mounting this class, if the function of this class is started concurrently with the start of node operation, this property may be implemented at a fixed value of 0x30 (Operation status ON).

(2) Detection threshold level

Sets the threshold value that causes EPC = 0xB1 “Gas detection status” to be set to “Found” (8-step). The minimum value is 0x31 and the maximum value is 0x38. No concrete value is specified for each level. If the detection threshold of the actual device is higher or lower than the 8-step range, the property of the actual device shall be assigned to the property value of the 8 steps specified in this property.

(3) Gas detection status

This property indicates whether a gas detection status is found or not. When EPC = 0xB0 “Detection threshold level” is implemented, this property is set to “Gas detection status found” if the threshold set by the detection threshold level is exceeded, and is set to “Gas detection status



© 2000 - 2023 ECHONET Consortium

not found" if the detection threshold value is not reached.

(4) Measured value of gas concentration

This property indicates the measured value of gas concentration units of in ppm. The property value range shall be from 0x0000 to 0xFFFD (0 to 65533 ppm). When the property value of the actual device exceeds this property value range, the overflow code 0xFFFF shall be used. When said value falls below the property value range, the underflow code 0xFFFE shall be used.



© 2000 - 2023 ECHONET Consortium

# 3. 1. 29 Requirements for VOC sensor class

Class group code : 0x00

Class code : 0x1D

Instance code : 0x01–0x7F (0x00: All-instance specification code)

| Property name | EPC | Contents of property | Data type | Data size | Unit | Access rule | Man-datory | Announcement at status change | Remark |
|---|---|---|---|---|---|---|---|---|---|
| | | Value range (decimal notation) | | | | | | | |
| Operation status | 0x80 | This property indicates the ON/OFF status. | unsigned char | 1 byte | — | Set | | ○ | |
| | | ON=0x30, OFF=0x31 | | | | Get | ○ | | |
| Detection threshold level | 0xB0 | Specifies detection threshold level (8-step). | unsigned char | 1 byte | – | Set/Get | | | |
| | | 0x31–0x38 | | | | | | | |
| VOC detection status | 0xB1 | This property indicates VOC detection status. | unsigned char | 1 byte | – | Get | | ○ | |
| | | VOC detection status found = 0x41<br>VOC detection status not found = 0x42 | | | | | | | |
| Measured value of VOC concentration | 0xE0 | This property indicates measured value of VOC concentration in ppm. | unsigned short | 2 bytes | ppm | Get | ○ | | |
| | | 0x0000–0xFFFD (0–65533) | | | | | | | |

Note: In the “Announcement at status change” column, ○ denotes mandatory processing when the property is implemented.

(1) Operation status (inherited from the device object super class property)

This property indicates whether the function native to this class is operating or not (ON/OFF). In the node mounting this class, if the function of this class is started concurrently with the start of node operation, this property may be implemented at a fixed value of 0x30 (Operation status ON).

(2) Detection threshold level

Sets the threshold value that causes EPC = 0xB1 “VOC detection status” to be set to “Found” (8-step). The minimum value is 0x31 and the maximum value is 0x38. No concrete value is specified for each level. If the detection threshold of the actual device is higher or lower than the 8-step range, the property of the actual device shall be assigned to the property value of the 8 steps specified in this property.

(3) VOC detection status

This property indicates whether VOC detection status is found or not. When EPC = 0xB0 “Detection threshold level” is implemented, this property is set to “VOC detection status found” if the threshold set by the detection threshold level is exceeded, and “VOC detection status not



© 2000 - 2023 ECHONET Consortium

found" if the detection threshold value is not reached.

(4) Measured value of VOC concentration

This property indicates the measured value of VOC concentration units of in ppm. The property value range shall be from 0x0000 to 0xFFFD (0 to 65533 ppm). When the property value of the actual device exceeds this property value range, the overflow code 0xFFFF shall be used. When said value falls below the property value range, the underflow code 0xFFFE shall be used.



© 2000 - 2023 ECHONET Consortium

# 3. 1. 30 Requirements for differential pressure sensor class

Class group code : 0x00

Class code : 0x1E

Instance code : 0x01–0x7F (0x00: All-instance specification code)

| Property name | EPC | Contents of property | Data type | Data size | Unit | Access rule | Man-datory | Announcement at status change | Remark |
|---|---|---|---|---|---|---|---|---|---|
| | | Value range (decimal notation) | | | | | | | |
| Operation status | 0x80 | This property indicates the ON/OFF status. | unsigned char | 1 byte | — | Set | | ○ | |
| | | ON=0x30, OFF=0x31 | | | | Get | ○ | | |
| Measured value of differential pressure | 0xE0 | This property indicates measured value of differential pressure in Pa. | signed short | 2 bytes | Pa | Get | ○ | | |
| | | 0x8001–0x7FFE (-32767–32766) | | | | | | | |

Note: In the “Announcement at status change” column, ○ denotes mandatory processing when the property is implemented.

(1) Operation status (inherited from the device object super class property)

This property indicates whether the function native to this class is operating or not (ON/OFF). In the node mounting this class, if the function of this class is started concurrently with the start of node operation, this property may be implemented at a fixed value of 0x30 (Operation status ON).

(2) Measured value of differential pressure

This property indicates the measured value of differential pressure in units of Pa. The property value range shall be from 0x8001 to 0x7FFD (-32767 to 32766 Pa). When the property value of the actual device exceeds this property value range, the overflow code 0x7FFF shall be used. When said value is below the property value range, the underflow code 0x8000 shall be used.



© 2000 - 2023 ECHONET Consortium

## 3. 1. 31 Requirements for air speed sensor class

Class group code : 0x00

Class code : 0x1F

Instance code : 0x01–0x7F (0x00: All-instance specification code)

| Property name | EPC | Contents of property | Data type | Data size | Unit | Access rule | Man-datory | Announcement at status change | Remark |
|---|---|---|---|---|---|---|---|---|---|
| | | Value range (decimal notation) | | | | | | | |
| Operation status | 0x80 | This property indicates the ON/OFF status. | unsigned char | 1 byte | — | Set | | ○ | |
| | | ON=0x30, OFF=0x31 | | | | Get | ○ | | |
| Measured value of air speed | 0xE0 | This property indicates the measured value of air speed in units of 0.01 m/sec. | unsigned short | 2 bytes | 0.01 m/sec | Get | ○ | | |
| | | 0x0000–0xFFFD (0–655.33 m/sec) | | | | | | | |
| Air flow direction | 0xE1 | This property indicates air flow direction in units of degrees. | unsigned short | 2 bytes | degree | Get | | | |
| | | 0x0000-0x0168 (0-360°) | | | | | | | |

Note: In the “Announcement at status change” column, ○ denotes mandatory processing when the property is implemented.

(1) Operation status (inherited from the device object super class property)

This property indicates whether the function native to this class is operating or not (ON/OFF). In the node mounting this class, if the function of this class is started concurrently with the start of node operation, this property may be implemented at a fixed value of 0x30 (Operation status ON).

(2) Measured value of air speed

This property indicates the measured value of air speed in units of 0.01 m/sec. The property value range shall be from 0x0000 to 0xFFFD (0 to 655.33 m/sec.). When the property value of the actual device exceeds this property value range, the overflow code 0xFFFF shall be used. When said value falls below the property value range, the underflow code 0xFFFE shall be used.

(3) Air flow direction

This property indicates the air flow direction in units of degrees. The measurement range of the direction shall be from 0x0000 to 0x0168 (0°to 360°). The north direction should be 0°(360°) as a rule.



© 2000 - 2023 ECHONET Consortium

# 3. 1. 32 Requirements for odor sensor class

Class group code : 0x00

Class code : 0x20

Instance code : 0x01–0x7F (0x00: All-instance specification code)

| Property name | EPC | Contents of property | Data type | Data size | Unit | Access rule | Man-datory | Announcement at status change | Remark |
|---|---|---|---|---|---|---|---|---|---|
| | | Value range (decimal notation) | | | | | | | |
| Operation status | 0x80 | This property indicates the ON/OFF status. | unsigned char | 1 byte | — | Set | | ○ | |
| | | ON=0x30, OFF=0x31 | | | | Get | ○ | | |
| Detection threshold level | 0xB0 | Specifies detection threshold level (8-step). | unsigned char | 1 byte | – | Set/Get | | | |
| | | Level 0x31–0x38 | | | | | | | |
| Odor detection status | 0xB1 | This property indicates odor detection status. | unsigned char | 1 byte | – | Get | | | |
| | | Odor detection status found = 0x41<br>Odor detection status not found = 0x42 | | | | | | | |
| Measured odor value | 0xE0 | This property indicates measured odor value. The unit is not specified. | unsigned char | 1 byte | – | Get | ○ | | |
| | | 0x00–0xFD (0–253) | | | | | | | |

Note: In the “Announcement at status change” column, ○ denotes mandatory processing when the property is implemented.

(1) Operation status (inherited from the device object super class property)

This property indicates whether the function native to this class is operating or not (ON/OFF). In the node mounting this class, if the function of this class is started concurrently with the start of node operation, this property may be implemented at a fixed value of 0x30 (Operation status ON).

(2) Detection threshold level

Sets the threshold value that causes EPC = 0xB1 “Odor detection status” to be set to “Found” (8-step). The minimum value is 0x31 and the maximum value is 0x38. No concrete value is specified for each level. If the detection threshold of the actual device is higher or lower than the 8-step range, the property of the actual device shall be assigned to the property value of the 8 steps specified in this property.

(3) Odor detection status

This property indicates whether an odor detection status is found or not. When EPC = 0xB0 “Detection threshold level” is implemented, this property is set to “Odor detection status found” if the threshold set by the detection threshold level is exceeded, and is set to “Odor detection



© 2000 - 2023 ECHONET Consortium

status not found" if the detection threshold value is not reached.

(4) Measured odor value

This property indicates the measured odor value. The unit is not specified. The property value range shall be from 0x00 to 0xFD (0 to 253). When the property value of the actual device exceeds this property value range, the overflow code 0xFF shall be used. When said value falls below the property value range, the underflow code 0xFE shall be used.



© 2000 - 2023 ECHONET Consortium

# 3. 1. 33 Requirements for flame sensor class

Class group code : 0x00

Class code : 0x21

Instance code : 0x01–0x7F (0x00: All-instance specification code)

| Property name | EPC | Contents of property | Data type | Data size | Unit | Access rule | Man-datory | Announcement at status change | Remark |
|---|---|---|---|---|---|---|---|---|---|
| | | Value range (decimal notation) | | | | | | | |
| Operation status | 0x80 | This property indicates the ON/OFF status. | unsigned char | 1 byte | — | Set | | ○ | |
| | | ON=0x30, OFF=0x31 | | | | Get | ○ | | |
| Detection threshold level | 0xB0 | Specifies detection threshold level (8-step). | unsigned char | 1 byte | – | Set/Get | | | |
| | | Detection threshold level 0x31–0x38 | | | | | | | |
| Flame detection status | 0xB1 | This property indicates flame detection status. | unsigned char | 1 byte | – | Get | ○ | ○ | |
| | | Flame detection status found = 0x41<br>Flame detection status not found = 0x42 | | | | | | | |
| Flame detection status resetting | 0xBF | Resets flame detection status by setting 0x00. | unsigned char | 1 byte | – | Set | | | |
| | | Reset = 0x00 | | | | | | | |

Note: In the “Announcement at status change” column, ○ denotes mandatory processing when the property is implemented.

(1) Operation status (inherited from the device object super class property)

This property indicates whether the function native to this class is operating or not (ON/OFF). In the node mounting this class, if the function of this class is started concurrently with the start of node operation, this property may be implemented at a fixed value of 0x30 (Operation status ON).

(2) Detection threshold level

Sets the threshold value that causes EPC = 0xB1 “Flame detection status” to be set to “Found” (8-step). The minimum value is 0x31 and the maximum value is 0x38. No concrete value is specified for each level. If the detection threshold of the actual device is higher or lower than the 8-step range, the property of the actual device shall be assigned to the property value of the 8 steps specified in this property.

(3) Flame detection status

This property indicates whether a flame detection status is found or not. When EPC = 0xB0 “Detection threshold level” is implemented, this property is set to “Flame detection status found”



© 2000 - 2023 ECHONET Consortium

= 0x41 if the threshold set by the detection threshold level is exceeded. This property shall be set to “Flame detection status not found” = 0x42 by resetting the main body or by EPC = 0xBF “Flame detection status resetting”.

(4) Flame detection status resetting

Resets EPC = 0xB1 “Flame detection status” by setting 0x00.



© 2000 - 2023 ECHONET Consortium

# 3. 1. 34 Requirements for electric energy sensor class

Class group code : 0x00

Class code : 0x22

Instance code : 0x01–0x7F (0x00: All-instance specification code)

| Property name | EPC | Contents of property | Data type | Data size | Unit | Access rule | Man-datory | Announcement at status change | Remark |
|---|---|---|---|---|---|---|---|---|---|
| | | Value range (decimal notation) | | | | | | | |
| Operation status | 0x80 | This property indicates the ON/OFF status. | unsigned char | 1 byte | — | Set | | ○ | |
| | | ON=0x30, OFF=0x31 | | | | Get | ○ | | |
| Cumulative amount of electric energy | 0xE0 | This property indicates cumulative amount of electric energy in 0.001kWh. | unsigned long | 4 bytes | 0.001k Wh | Get | ○ | | |
| | | 0x00000000–0x3B9AC9FF (0–999,999.999 kWh) | | | | | | | |
| Medium-capacity sensor instantaneous electric power | 0xE1 | This property indicates measured instantaneous electric power in watts. | signed long | 4 bytes | W | Get | | | |
| | | 0xC4653601–0x3B9AC9FF (-999,999.999–999,999.999) | | | | | | | |
| Small-capacity sensor instantaneous electric power | 0xE2 | This property indicates instantaneous electric power in units of 0.1 W. | signed short | 2 bytes | 0.1 W | Get | | | |
| | | 0x8001–0x7FFE (-3276.7–3276.6) | | | | | | | |
| Large-capacity sensor instantaneous electric power | 0xE3 | This property indicates instantaneous electric power in units of 0.1 kW. | signed short | 2 bytes | 0.1 kW | Get | | | |
| | | 0x8001–0x7FFE (-3276.7–3276.6) | | | | | | | |
| Cumulative amount of electric energy measurement log | 0xE4 | This property indicates measurement result log of cumulative amount of electric energy (0.001kWh) for the past 24 hours in 30-minute sections. | unsigned long × 48 | 192 bytes | 0.001k Wh | Get | | | |
| | | 0x0000000–0x3B9AC9F (0–999,999.999 kWh) | | | | | | | |
| Effective voltage value | 0xE5 | This property indicates effective voltage value in volts. | unsigned short | 2 bytes | V | Get | | | |
| | | 0x0000–0xFFFD (0–65533V) | | | | | | | |

Note: In the “Announcement at status change” column, ○ denotes mandatory processing when the property is implemented.

(1) Operation status (inherited from the device object super class property)

This property indicates whether the function native to this class is operating or not (ON/OFF). In the node mounting this class, if the function of this class is started concurrently with the start of node operation, this property may be implemented at a fixed value of 0x30 (Operation status ON).

(2) Cumulative amount of electric energy



© 2000 - 2023 ECHONET Consortium

This property indicates the cumulative amount of electric energy in 0.001kWh. The property value range shall be from 0x00000000 to 0x3B9AC9FF (0 to 999,999.999 kWh). When the cumulative amount of electric energy overflows, this value shall be incremented from 0x00000000.

(3) Small-capacity sensor instantaneous electric power

This property indicates the measured value of small-capacity sensor instantaneous electric power in units of 0.1 W. The property value range shall be from 0x8001 to 0x7FFE (-3276.7 to 3276.6 W). When the property value of the actual device exceeds this property value range, the overflow code 0x7FFF shall be used. When said value falls below the property value range, the underflow code 0x8000 shall be used.

(4) Medium-capacity sensor instantaneous electric power

This property indicates the measured instantaneous electric power of the medium-capacity sensor in watts. The value range of the property shall be from 0xC4653601 to 0x3B9AC9FF (-999,999.999 to 999,999.999W). If the property value of the actual device is above or below the value range, 0x7FFFFFFF (overflow code) or 0x80000000 (underflow code) shall be used, respectively.

(5) Large-capacity sensor instantaneous electric power

This property indicates the measured value of large-capacity sensor instantaneous electric power in units of 0.1 kW. The property value range shall be from 0x8001 to 0x7FFE (-3276.7 to 3276.6 kW). When the property value of the actual device exceeds this property value range, the overflow code 0x7FFF shall be used. When said value falls below the property value range, the underflow code 0x8000 shall be used.

(6) Cumulative amount of electric energy measurement log

This property indicates the cumulative amount of electric energy (0.001kWh) measurement result log for the past 24 hours in 30-minute sections. The measured value in 0.001kWh at each 0 minute and 30 minutes based on the time set in the property name “Current time setting” (EPC = 0x97) shall be indicated in the range from 0x00000000 to 0x3B9AC9FF (0 to 999,999.999 kWh). The property value shall begin with the high-order byte in time series. However, for the hours and half hours at which the amount of electric energy was not measured, 0xFFFFFFFE shall be used as the historical data value.

(7) Effective voltage value

This property indicates the measured value of effective voltage of the electric energy sensor in volts. This property may be implemented as a fixed value of the rated voltage of measurement.



© 2000 - 2023 ECHONET Consortium

# 3. 1. 35 Requirements for current sensor class

Class group code : 0x00

Class code : 0x23

Instance code : 0x01–0x7F (0x00: All-instance specification code)

| Property name | EPC | Contents of property | Data type | Data size | Unit | Access rule | Man-datory | Announcement at status change | Remark |
|---|---|---|---|---|---|---|---|---|---|
| | | Value range (decimal notation) | | | | | | | |
| Operation status | 0x80 | This property indicates the ON/OFF status. | unsigned char | 1 byte | — | Set | | ○ | |
| | | ON=0x30, OFF=0x31 | | | | Get | ○ | | |
| Measured current value 1 | 0xE0 | This property indicates measured current value in mA. | unsigned long | 4 bytes | mA | Get | ○ | | Note1 |
| | | 0x00000000–0xFFFFFFFD (0–4,294,967,293mA) | | | | | | | |
| Rated voltage to be measured | 0xE1 | Rated voltage value to be measured by current sensor | unsigned short | 2 bytes | V | Get | | | |
| | | 0x0000–0xFFFD (0–65533V) | | | | | | | |
| Measured current value 2 | 0xE2 | This property indicates measured current value in mA. | unsigned long | 4 bytes | mA | Get | ○ | | Note1 |
| | | 0x80000001–0x7FFFFFFE (-2,147,483,647–2,147,483,646mA) | | | | | | | |

Note: In the “Announcement at status change” column, ○ denotes mandatory processing when the property is implemented.

Note1: Either “Measured current value 1 EPC:0xE0” or “Measured current value 2 EPC:0xE2” is mandatory.

(1) Operation status (inherited from the device object super class property)

This property indicates whether the function native to this class is operating or not (ON/OFF). In the node mounting this class, if the function of this class is started concurrently with the start of node operation, this property may be implemented at a fixed value of 0x30 (Operation status ON).

(2) Measured current value 1

This property indicates the measured current value in mA. When an alternating current is measured, its effective value shall be indicated. The property value range shall be from 0x00000000 to 0xFFFFFFFD (0 to 4,294,967,293 mA). When the property value of the actual device exceeds this property value range, the overflow code 0xFFFFFFFF shall be used. When said value is below the property value range, the underflow code 0xFFFFFFFE shall be used.

(3) Rated voltage to be measured

This property indicates the rated voltage value to be measured by the current sensor in V. This



© 2000 - 2023 ECHONET Consortium

property may be implemented as a fixed value.

(4) Measured current value 2

This property indicates the measured current value in mA. When an alternating current is measured, its effective value shall be indicated. The property value range shall be from 0x80000001 to 0x7FFFFFFE (-2,147,483,647 to 2,147,483,646mA). When the property value of the actual device exceeds this property value range, the overflow code 0x7FFFFFFF shall be used. When said value is below the property value range, the underflow code 0x80000000 shall be used. The current direction from the source to the equipment shall be positive



© 2000 - 2023 ECHONET Consortium

# 3. 1. 36 Requirements for water flow rate sensor class

This class is provided for a water tap or the like and is stipulated for the purpose of measuring the amount of water used.

Class group code : 0x00
Class code : 0x25
Instance code : 0x01–0x7F (0x00: All-instance specification code)

| Property name | EPC | Contents of property | Data type | Data size | Unit | Access rule | Man-datory | Announcement at status change | Remark |
|---|---|---|---|---|---|---|---|---|---|
| | | Value range (decimal notation) | | | | | | | |
| Operation status | 0x80 | This property indicates the ON/OFF status. | unsigned char | 1 byte | — | Set | | ○ | |
| | | ON=0x30, OFF=0x31 | | | | Get | ○ | | |
| Cumulative flow rate | 0xE0 | This property indicates measured cumulative flow in $cm^3$. | unsigned long | 4 bytes | $cm^3$ | Get | | | |
| | | 0x00000000–0x3B9AC9FF (0–999,999,999) | | | | | | | |
| Flow rate | 0xE2 | This property indicates measured instantaneous flow rate in cm3/min. | unsigned long | 4 bytes | $cm^3$/min | Get | ○ | | |
| | | 0x0000–0x3B9AC9FF (0–999,999,999) | | | | | | | |

Note: In the “Announcement at status change” column, ○ denotes mandatory processing when the property is implemented.

(1) Operation status (inherited from the device object super class property)

This property indicates whether the function native to this class is operating or not (ON/OFF). In the node mounting this class, if the function of this class is started concurrently with the start of node operation, this property may be implemented at a fixed value of 0x30 (operation status ON).

(2) Cumulative flow rate

This property indicates the cumulative value of the flow rate in units of $cm^3$. The property value range shall be from 0x00000000 to 0x3B9AC9FF (0 to 999,999,999 $cm^3$). If the measured cumulative flow of the actual device exceeds this property value range, the overflow code 0xFFFFFFFF shall be set.

(3) Flow rate

This property indicates the flow rate in units of $cm^3$/min. The property value range shall be from 0x00000000 to 0x3B9AC9FF(0 to 999,999,999 $cm^3$/min). If the measured value of flow rate of the actual device exceeds this property value range, the overflow code 0xFFFFFFFF shall be set.



© 2000 - 2023 ECHONET Consortium

# 3. 1. 37 Requirements for micromotion sensor class

Class group code : 0x00

Class code : 0x26

Instance code : 0x01–0x7F (0x00: All-instance specification code)

| Property name | EPC | Contents of property | Data type | Data size | Unit | Access rule | Man-datory | Announcement at status change | Remark |
|---|---|---|---|---|---|---|---|---|---|
| | | Value range (decimal notation) | | | | | | | |
| Operation status | 0x80 | This property indicates the ON/OFF status. | unsigned char | 1 byte | — | Set | | ○ | |
| | | ON=0x30, OFF=0x31 | | | | Get | ○ | | |
| Detection threshold level | 0xB0 | Specifies detection threshold level (8-step). | unsigned char | 1 byte | – | Set/Get | | | |
| | | 0x31–0x38 | | | | | | | |
| Micromotion detection status | 0xB1 | This property indicates whether micromotion is detected or not. | unsigned char | 1 byte | – | Get | ○ | ○ | |
| | | Micromotion detected = 0x41<br>Micromotion not detected = 0x42 | | | | | | | |
| Detection counter | 0xB2 | This property indicates micromotion detection count. | unsigned short | 2 bytes | – | Set/Get | | | |
| | | 0x0000–0xFFFE (0–65534) | | | | | | | |
| Sampling count | 0xBC | This property indicates micromotion detection sampling count. | unsigned short | 2 bytes | – | Set/Get | | | |
| | | 0x0000–0xFFFE (0–65534) | | | | | | | |
| Sampling cycle | 0xBD | This property indicates micromotion detection sampling cycle. | unsigned short | 2 bytes | msec | Set/Get | | | |
| | | 0x0000–0xFFFE (0–65534) | | | | | | | |

Note: In the “Announcement at status change” column, ○ denotes mandatory processing when the property is implemented.

(1) Operation status (inherited from the device object super class property)

This property indicates whether the function native to this class is operating or not (ON/OFF). In the node mounting this class, if the function of this class is started concurrently with the start of node operation, this property may be implemented at a fixed value of 0x30 (Operation status ON).

(2) Detection threshold level

Sets 8 levels of threshold values at which the “Micromotion detection status” property (EPC = 0xB1) changes to “Micromotion detected”. The minimum value is 0x31 and the maximum value is 0x38. No concrete value is specified for each level. If the detection threshold of the actual device is higher or lower than the 8-step range, the property of the actual device shall be assigned to the property value of the 8 steps specified in this property.



© 2000 - 2023 ECHONET Consortium

(3) Micromotion detection status

This property indicates whether a micromotion is detected or not. When the “Detection threshold level” (EPC = 0xB0) is implemented and the threshold value set by the detection threshold level is exceeded, the status shall change to “Micromotion detected”. On the other hand, if the threshold value is not reached, the status shall change to “Micromotion not detected”. When the “Sampling count” (EPC = 0xBC) and “Sampling cycle” (EPC = 0xBD) are implemented, the micromotion detection port and other relevant status shall be checked at time intervals specified by the sampling cycle. When the same micromotion detection state persists during the sampling period specified by the “sampling count” setting (EPC = 0xBD), the status shall change to that state.

(4) Detection counter

This property indicates the number of micromotion detections. Here, the term “micromotion detection” represents the above-mentioned property and does not indicate the number of conclusive detections.

The count shall range from 0x0000 to 0xFFFE (0 to 65534). If the count limit is exceeded, the overflow code 0xFFFF shall be used. The timing for clearing the counter depends on the application and is not stipulated here.

(5) Sampling count

This property indicates the sampling count for concluding that a micromotion is detected. When this property is implemented, the “Sampling cycle” (EPC = 0xBD) shall be implemented as well. The sampling count shall range from 0x0000 to 0xFFFE (0 to 65534).

(6) Sampling cycle

This property indicates the sampling cycle for the micromotion detection port, etc. in msec. When this property is implemented, the “Sampling count” (EPC = 0xBC) shall be implemented as well. The sampling cycle value shall vary in msec and range from 0x0000 to 0xFFFE (0 to 65534).



© 2000 - 2023 ECHONET Consortium

## 3. 1. 38 Requirements for passage sensor class

Class group code : 0x00

Class code : 0x27

Instance code : 0x01–0x7F (0x00: All-instance specification code)

| Property name | EPC | Contents of property | Data type | Data size | Unit | Access rule | Man-datory | Announcement at status change | Remark |
|---|---|---|---|---|---|---|---|---|---|
| | | Value range (decimal notation) | | | | | | | |
| Operation status | 0x80 | This property indicates the ON/OFF status. | unsigned char | 1 byte | — | Set | | ○ | |
| | | ON=0x30, OFF=0x31 | | | | Get | ○ | | |
| Detection threshold level | 0xB0 | Specifies detection threshold level (8-step). | unsigned char | 1 byte | – | Set/Get | | | |
| | | 0x31–0x38 | | | | | | | |
| Passage detection hold time | 0xBE | This property indicates passage detection hold time in ms. | unsigned char | 2 bytes | ms | Set/Get | | | |
| | | 0x0000–0xFFFD (0–65533 ms) | | | | | | | |
| Passage detection direction | 0xE0 | This property indicates direction of passage (one of 8 different directions). | unsigned char | 1 byte | – | Get | ○ | ○ | |
| | | 0x30: No passage.<br>0x31 to 0x38: Direction of passage.<br>0x39: Passage detected but not located. Or, a sensor incapable of detecting passage direction was passed. | | | | | | | |

Note: In the “Announcement at status change” column, ○ denotes mandatory processing when the property is implemented.

(1) Operation status (inherited from the device object super class property)

This property indicates whether the function native to this class is operating or not (ON/OFF). In the node mounting this class, if the function of this class is started concurrently with the start of node operation, this property may be implemented at a fixed value of 0x30 (Operation status ON).

(2) Detection threshold level

Sets 8 steps of threshold values at which the “Passage detection direction” (EPC = 0xE0) property changes from “No passage” (0x30) to “Passage detected” (0x31 to 0x39). The minimum value is 0x31 and the maximum value is 0x38. No concrete value is specified for each level. If the detection threshold of the actual device is higher or lower than the 8-step range, the property of the actual device shall be assigned to the property value of the 8 steps specified in this property.

(3) Passage detection hold time



© 2000 - 2023 ECHONET Consortium

This property refers to the time interval between the instant at which the passage detection direction property changes to “Passage detected” (0x31 to 0x39) and the instant at which the property reverts to “No passage”. The property value range shall be 0x0000 to 0xFFFD (0 to 65533 ms).

(4) Passage detection direction

Uses a value between 0x30 and 0x38 to indicate the two-dimensional direction of passage. The values within the range of 0x31 to 0x38 shall indicate the direction of passage. The values shall indicate 8 different directions clockwise with the value 0x31 representing “IN”.

The value 0x30 indicates the state in which no passage is detected. If a passage is detected but its direction cannot be identified, the value 0x39 shall be taken. The value 0x39 shall also be taken if a passage is detected by a sensor incapable of detecting the direction of passage.

In situations where “Passage detection hold time” (EPC = 0xBE) is implemented, the value of this property shall revert to “No passage” (0x30) if the detection hold time elapses after the property value changes from “No passage” (0x30) to “Passage detected” (0x31 to 0x39).

Even if an actual device (sensor) capable of detecting the direction of passage detects fewer than or more than 8 directions, the passage detection directions of the actual device (sensor) shall be assigned to the 8-direction property values defined here. When two directions are to be detected, their property values shall be 0x31 (IN) and 0x35 (OUT). The directions IN and OUT are not stipulated here.

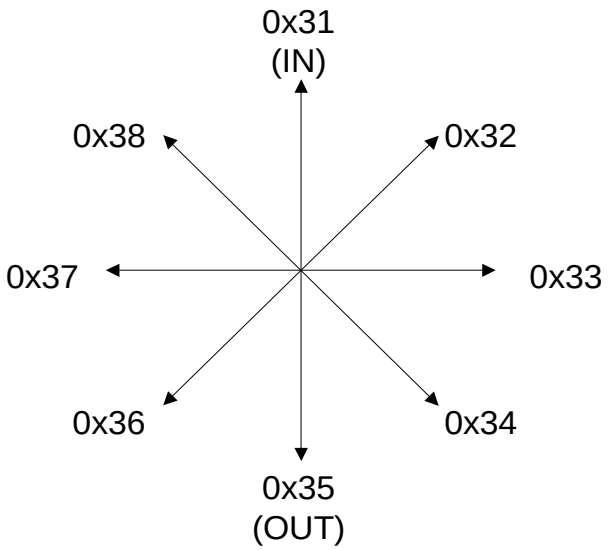


Fig. 3-1 Correspondence between Passage Detection Direction Property Values and Directions



© 2000 - 2023 ECHONET Consortium

# 3. 1. 39 Requirements for bed presence sensor class

Class group code : 0x00

Class code : 0x28

Instance code : 0x01–0x7F (0x00: All-instance specification code)

| Property name | EPC | Contents of property | Data type | Data size | Unit | Access rule | Man-datory | Announcement at status change | Remark |
|---|---|---|---|---|---|---|---|---|---|
| | | Value range (decimal notation) | | | | | | | |
| Operation status | 0x80 | This property indicates the ON/OFF status. | unsigned char | 1 byte | — | Set | | ○ | |
| | | ON=0x30, OFF=0x31 | | | | Get | ○ | | |
| Detection threshold level | 0xB0 | Specifies detection threshold level (8-step). | unsigned char | 1 byte | – | Set/Get | | | |
| | | Detection threshold level 0x31–0x38 | | | | | | | |
| Bed presence detection status | 0xB1 | This property indicates bed presence detection status. | unsigned char | 1 byte | – | Get | ○ | ○ | |
| | | Bed presence detected = 0x41, Bed presence not detected = 0x42 | | | | | | | |

Note: In the "Announcement at status change" column, ○ denotes mandatory processing when the property is implemented.

(1) Operation status (inherited from the device object super class property)

This property indicates whether the function native to this class is operating or not (ON/OFF). In the node mounting this class, if the function of this class is started concurrently with the start of node operation, this property may be implemented at a fixed value of 0x30 (Operation status ON).

(2) Detection threshold level

Sets 8 steps of threshold values at which "Bed presence detection status" (EPC = 0xB1) changes to "Bed presence detected". The minimum value is 0x31 and the maximum value is 0x38. No concrete value is specified for each level. If the detection threshold of the actual device is higher or lower than the 8-step range, the property of the actual device shall be assigned to the property value of the 8 steps specified in this property.

(3) Bed presence detection status

This property indicates whether a bed presence is detected or not.

In situations where "Detection threshold level" (EPC = 0xB0) is implemented, the status shall change to "Bed presence detected" when the threshold value set by "Detection threshold level" is exceeded. If the threshold value is not reached, on the other hand, the status shall change to "Bed presence not detected".



© 2000 - 2023 ECHONET Consortium

# 3．1．40 Requirements for open/close sensor class

Class group code : 0x00

Class code : 0x29

Instance code : 0x01–0x7F (0x00: All-instance specification code)

| Property name | EPC | Contents of property | Data type | Data size | Unit | Access rule | Man-datory | Announcement at status change | Remark |
|---|---|---|---|---|---|---|---|---|---|
| | | Value range (decimal notation) | | | | | | | |
| Operation status | 0x80 | This property indicates the ON/OFF status. | unsigned char | 1 byte | — | Set | | ○ | |
| | | ON=0x30, OFF=0x31 | | | | Get | ○ | | |
| Degree-of-opening detection status 1 | 0xE0 | Specifies open/close detection status and one of 8 different degrees of opening. | unsigned char | 1 byte | – | Get | ○ | | Note1 |
| | | Close detected: 0x30; Degree-of-opening level: 0x31 to 0x38; Open detected but degree-of-opening unknown: 0x39 | | | | | | | |
| Detection threshold level | 0xB0 | Specifies detection threshold level (8-step). | unsigned char | 1 byte | – | Set/Get | | | |
| | | Detection threshold level 0x31–0x38 | | | | | | | |
| Degree-of-opening detection status 2 | 0xB1 | Specifies whether degree-of –opening detected or not | unsigned char | 1 byte | – | Get | ○ | ○ | Note1 |
| | | Open detected =0x41, Close detected =0x42 | | | | | | | |

Note: In the “Announcement at status change” column, ○ denotes mandatory processing when the property is implemented.

Note1: Either the “Degree-of-opening detection status 1” (EPC = 0xE0) or “Degree-of-opening detection status 2” (EPC = 0xB1) property must be implemented.

(1) Operation status (inherited from the device object super class property)

This property indicates whether the function native to this class is operating or not (ON/OFF). In the node mounting this class, if the function of this class is started concurrently with the start of node operation, this property may be implemented at a fixed value of 0x30 (Operation status ON).

(2) Degree-of-opening detection status

This property indicates whether a door or window is open or closed, and uses 8 different steps to indicate the degree of opening.

The property value 0x30 indicates that a door or window is closed. If the property value is between 0x31 and 0x38, it indicates that the detection target is open. The property value 0x31 indicates the minimum degree of opening, whereas the property value 0x38 indicates the maximum degree of opening. Here, the terms “closed”, “open”, and “degree of opening” represent various states detected by an open/close sensor mounted on a door or window. Degrees



© 2000 - 2023 ECHONET Consortium

of opening represented by the values 0x31 to 0x38 should be defined by dividing the difference between the closed state (0x30) and fully open state (0x38) into equal portions.

(3) Detection threshold level

Sets 8 steps of threshold values at which “Open /close detection status 2” (EPC = 0xB1) changes to “Open/close detected”. The minimum value is 0x31 and the maximum value is 0x38. No concrete value is specified for each level. If the detection threshold of the actual device is higher or lower than the 8-step range, the property of the actual device shall be assigned to the property value of the 8 steps specified in this property.

(4) Degree-of-opening detection status 2

Specifies detecting of open/close status. In implementing EPC = 0xB0 “Detection threshold level”, when the detection level becomes higher than or equal to a threshold value set by the detection threshold level, the degree-of opening detection changes into “degree-of-opening detection detected” =0x41. When the detection level becomes lower than the threshold value set by the detection threshold level, the degree-of opening detection changes into “degree-of-opening detection not detected” =0x42.



© 2000 - 2023 ECHONET Consortium

# 3. 1. 41 Requirements for activity amount sensor class

Class group code : 0x00

Class code : 0x2A

Instance code : 0x01–0x7F (0x00: All-instance specification code)

| Property name | EPC | Contents of property | Data type | Data size | Unit | Access rule | Man-datory | Announcement at status change | Remark |
|---|---|---|---|---|---|---|---|---|---|
| | | Value range (decimal notation) | | | | | | | |
| Operation status | 0x80 | This property indicates the ON/OFF status. | unsigned char | 1 byte | — | Set | | ○ | |
| | | ON=0x30, OFF=0x31 | | | | Get | ○ | | |
| Activity amount level 1 | 0xE0 | This property indicates 8 different activity mount levels. The array element number represents a human body ID. | unsigned char × max 128 | Max 128 bytes | – | GetM | ○ | | Note1 |
| | | 0x31–0x38 | | | | | | | |
| Maximum number of human body ID's | 0xE1 | This property indicates maximum number of human body IDs that can be registered for activity amount level 1. | unsigned short | 2 bytes | – | Get | | | |
| | | 0x0001–0x0080 (= 1–128) | | | | | | | |
| Activity amount level 2 | 0xE2 | This property indicates 8 different activity amount levels. | unsigned char | 1 byte | – | Get | ○ | | Note1 |
| | | 0x31–0x38 | | | | | | | |
| Human body existence information | 0xE3 | Array element number information retained by activity amount level 1. | unsigned char × 16 | 16 bytes | – | Get | | | |
| | | (See (5) below for details.) | | | | | | | |

Note: In the "Announcement at status change" column, ○ denotes mandatory processing when the property is implemented.

Note1: Either the "Activity amount level 1" (EPC = 0xE0) or "Activity amount level 2" (EPC = 0xE2) property must be implemented.

(1) Operation status (inherited from the device object super class property)

This property indicates whether the function native to this class is operating or not (ON/OFF). In the node mounting this class, if the function of this class is started concurrently with the start of node operation, this property may be implemented at a fixed value of 0x30 (Operation status ON).

(2) Activity amount level 1

This property indicates 8 different activity amount values. The values 0x31 and 0x38 shall be used as the minimum and maximum values, respectively. However, specific activity amounts for the 8 different levels are not stipulated.

Even if the number of activity amount levels of the actual device is less than or greater than 8, the activity amount levels of the actual device shall be assigned to the 8 different property values



© 2000 - 2023 ECHONET Consortium

defined here.

The array element number represents a human body ID for identifying an individual.

If the human body ID associated with an array element number is not found, it is concluded that the associated array element does not exist. The array element number range shall be 0x0000 to 0x007F (0 to 127).

(3) Maximum number of human body ID's

This property indicates the maximum number of human body IDs that can be registered for activity amount level 1.

Eventually, this value is equal to the maximum processable array element number plus 1. Therefore, the property value range shall be 0x0001 to 0x0080 (1 to 128).

(4) Activity amount level 2

Sets 8 different activity amount values. The values 0x31 and 0x38 shall be used as the minimum and maximum values, respectively. However, specific activity amounts for the 8 different levels are not stipulated.

Even if the number of activity amount levels of the actual device is less than or greater than 8, the activity amount levels of the actual device shall be assigned to the 8 property values defined here.

(5) Human body existence information

A bitmap is used to indicate whether or not the array element number information is retained for activity amount level 1. In the following 16-byte table, the value 1 shall be set at bit locations that indicate existing array element numbers.

| | Bit 0 | Bit 1 | Bit 2 | Bit 3 | Bit 4 | Bit 5 | Bit 6 | Bit 7 |
|---|---|---|---|---|---|---|---|---|
| 1st byte | 0000 | 0001 | 0002 | 0003 | 0004 | 0005 | 0006 | 0007 |
| 2nd byte | 0008 | 0009 | 000A | 000B | 000C | 000D | 000E | 000F |
| 3rd byte | 0010 | 0011 | 0012 | 0013 | 0014 | 0015 | 0016 | 0017 |
| 4th byte | 0018 | 0019 | 001A | 001B | 001C | 001D | 001E | 001F |
| 5th byte | 0020 | 0021 | 0022 | 0023 | 0024 | 0025 | 0026 | 0027 |
| 6th byte | 0028 | 0029 | 002A | 002B | 002C | 002D | 002E | 002F |
| 7th byte | 0030 | 0031 | 0032 | 0033 | 0034 | 0035 | 0036 | 0037 |
| 8th byte | 0038 | 0039 | 003A | 003B | 003C | 003D | 003E | 003F |
| 9th byte | 0040 | 0041 | 0042 | 0043 | 0044 | 0045 | 0046 | 0047 |
| 10th byte | 0048 | 0049 | 004A | 004B | 004C | 004D | 004E | 004F |
| 11th byte | 0050 | 0051 | 0052 | 0053 | 0054 | 0055 | 0056 | 0057 |
| 12th byte | 0058 | 0059 | 005A | 005B | 005C | 005D | 005E | 005F |
| 13th byte | 0060 | 0061 | 0062 | 0063 | 0064 | 0065 | 0066 | 0067 |
| 14th byte | 0068 | 0069 | 006A | 006B | 006C | 006D | 006E | 006F |
| 15th byte | 0070 | 0071 | 0072 | 0073 | 0074 | 0075 | 0076 | 0077 |
| 16th byte | 0078 | 0079 | 007A | 007B | 007C | 007D | 007E | 007F |



© 2000 - 2023 ECHONET Consortium

# 3. 1. 42 Requirements for human body location sensor

Class group code : 0x00

Class code : 0x2B

Instance code : 0x01–0x7F (0x00: All-instance specification code)

| Property name | EPC | Contents of property | Data type | Data size | Unit | Access rule | Man-datory | Announcement at status change | Remark |
|---|---|---|---|---|---|---|---|---|---|
| | | Value range (decimal notation) | | | | | | | |
| Operation status | 0x80 | This property indicates the ON/OFF status. | unsigned char | 1 byte | — | Set | | ○ | |
| | | ON=0x30, OFF=0x31 | | | | Get | ○ | | |
| Human body detection location 1 | 0xE0 | This property indicates human body detection location. The array element number indicates a human body ID. | unsigned char × 3 × max 128 | 3 × max 128 bytes | – | GetM | ○ | | Note1 |
| | | 1st byte: X coordinate; 2nd byte: Y coordinate; 3rd byte: Z coordinate | | | | | | | |
| Maximum number of human body ID's | 0xE1 | This property indicates maximum number of human body IDs that can be registered for human body detection location 1. | unsigned short | 2 bytes | – | Get | | | |
| | | 0x0001–0x0080 (= 1–128) | | | | | | | |
| Human body detection location 2 | 0xE2 | This property indicates human body detection location. | unsigned char × 3 | 3 bytes | – | Get | ○ | | Note1 |
| | | 1st byte: X coordinate; 2nd byte: Y coordinate; 3rd byte: Z coordinate | | | | | | | |
| Human body existence information | 0xE3 | Array element number information retained by human body detection location 1. | unsigned char × 16 | 16 bytes | – | Get | | | |
| | | (See (5) below for details.) | | | | | | | |

Note: In the "Announcement at status change" column, ○ denotes mandatory processing when the property is implemented.

Note1: Either the "Human body detection location 1" (EPC = 0xE0) or "Human body detection location 2" (EPC = 0xE2) property must be implemented.

(1) Operation status (inherited from the device object super class property)

This property indicates whether the function native to this class is operating or not (ON/OFF). In the node mounting this class, if the function of this class is started concurrently with the start of node operation, this property may be implemented at a fixed value of 0x30 (Operation status ON).

(2) Human body detection location 1

Each array element consists of three data bytes of unsigned char type.

The array element number represents a human body ID that identifies an individual. If the human body ID associated with an array element number is not found, it shall be concluded that no associated array element exists. The array element number range shall be 0x0000 to 0x007F



© 2000 - 2023 ECHONET Consortium

(0 to 127).

For the 1st, 2nd, and 3rd bytes, the three-dimensional human body detection location (X, Y, and Z coordinates) shall be indicated using 255 different values (0x00 to 0xFE).

For the X, Y, and Z coordinates, the value 0xFF shall mean that the location cannot be identified or is undefined.

If the human body ID associated with an array element number is not found, it shall be concluded that the related array element does not exist.

(3) Maximum array element count

This property indicates the maximum number of human body IDs that can be registered for human body detection location 1.

Eventually, this value is equal to the maximum processable array element number plus 1. Therefore, the property value range shall be 0x0001 to 0x0080 (1 to 128).

(4) Human body detection location 2

For the 1st, 2nd, and 3rd bytes, the three-dimensional human body detection location (X, Y, and Z coordinates) shall be indicated using 255 different values (0x00 to 0xFE).

For the X, Y, and Z coordinates, the value 0xFF shall mean that the location cannot be identified or is undefined.

(5) Human body existence information

A bitmap is used to indicate whether or not the array element number information is retained for human body location 1. In the following 16-byte table, the value 1 shall be set at bit locations that indicate existing array element numbers.

| | Bit 0 | Bit 1 | Bit 2 | Bit 3 | Bit 4 | Bit 5 | Bit 6 | Bit 7 |
|---|---|---|---|---|---|---|---|---|
| 1st byte | 0000 | 0001 | 0002 | 0003 | 0004 | 0005 | 0006 | 0007 |
| 2nd byte | 0008 | 0009 | 000A | 000B | 000C | 000D | 000E | 000F |
| 3rd byte | 0010 | 0011 | 0012 | 0013 | 0014 | 0015 | 0016 | 0017 |
| 4th byte | 0018 | 0019 | 001A | 001B | 001C | 001D | 001E | 001F |
| 5th byte | 0020 | 0021 | 0022 | 0023 | 0024 | 0025 | 0026 | 0027 |
| 6th byte | 0028 | 0029 | 002A | 002B | 002C | 002D | 002E | 002F |
| 7th byte | 0030 | 0031 | 0032 | 0033 | 0034 | 0035 | 0036 | 0037 |
| 8th byte | 0038 | 0039 | 003A | 003B | 003C | 003D | 003E | 003F |
| 9th byte | 0040 | 0041 | 0042 | 0043 | 0044 | 0045 | 0046 | 0047 |
| 10th byte | 0048 | 0049 | 004A | 004B | 004C | 004D | 004E | 004F |
| 11th byte | 0050 | 0051 | 0052 | 0053 | 0054 | 0055 | 0056 | 0057 |
| 12th byte | 0058 | 0059 | 005A | 005B | 005C | 005D | 005E | 005F |
| 13th byte | 0060 | 0061 | 0062 | 0063 | 0064 | 0065 | 0066 | 0067 |
| 14th byte | 0068 | 0069 | 006A | 006B | 006C | 006D | 006E | 006F |
| 15th byte | 0070 | 0071 | 0072 | 0073 | 0074 | 0075 | 0076 | 0077 |
| 16th byte | 0078 | 0079 | 007A | 007B | 007C | 007D | 007E | 007F |



© 2000 - 2023 ECHONET Consortium

# 3. 1. 43 Requirements for snow sensor class

Class group code : 0x00

Class code : 0x2C

Instance code : 0x01–0x7F (0x00: All-instance specification code)

| Property name | EPC | Contents of property | Data type | Data size | Unit | Access rule | Mandatory | Announce-ment at status change | Remark |
|---|---|---|---|---|---|---|---|---|---|
| | | Value range (decimal notation) | | | | | | | |
| Operation status | 0x80 | This property indicates ON/OFF status | unsigned char | 1 byte | — | Set | | ○ | |
| | | ON=0x30, OFF=0x31 | | | | Get | ○ | | |
| Detection threshold level | 0xB0 | This property indicates threshold levels with 8 steps | unsigned char | 1 byte | — | Set/Get | | | |
| | | 0x31-0x38 | | | | | | | |
| Snow detection status | 0xB1 | This property indicates snow detection | unsigned char | 1 byte | — | Get | ○ | ○ | |
| | | detected 0x41, not detected 0x42 | | | | | | | |

Note: In the “Announcement at status change” column, ○ denotes mandatory processing when the property is implemented.

(1) Operation status (Device object super class property inherited)

This property indicates whether the built-in function of this class is operated or not (ON/OFF). When the node equipped with this class begins to work and the function of this class begins to work, it is also possible to be implemented this property with the fixed value 0x30 (operation status ON).

(2) Detection threshold level

Threshold levels turned to “Detected” for EPC = 0xB1 “snow detection status” are specified with 8 steps. “0x31” is assigned for a minimum value and “0x38” is assigned for a maximum value. Concrete values assigned for other steps are not specified.

When the number of detection threshold steps is lower than 8 or higher than 8, these 8 steps property values defined by this property must be assigned to actual equipment properties.

(3) Snow detection status

Snow detection status is indicated with “Detected” or “Not detected”. When EPC = 0xB0 is implemented and a detection level is higher than or equal to the threshold value specified the detection threshold level, the snow detection status changes into “Detected”. When a sensing level becomes lower than the threshold value specified the detection threshold level, the snow detection status changes into “Not detected”.



© 2000 - 2023 ECHONET Consortium

## 3. 1. 44 Requirements for air pressure sensor class

Class group code : 0x00

Class code : 0x2D

Instance code : 0x01–0x7F (0x00: All-instance specification code)

| Property name | EPC | Contents of property | Data type | Data size | Unit | Access rule | Man-datory | Announcement at status change | Remark |
|---|---|---|---|---|---|---|---|---|---|
| | | Value range (decimal notation) | | | | | | | |
| Operation status | 0x80 | This property indicates the ON/OFF status. | unsigned char | 1 byte | — | Set | | ○ | |
| | | ON=0x30, OFF=0x31 | | | | Get | ○ | | |
| Air pressure measurement | 0xE0 | This property indicates air pressure measurements in units of 0.1hPa. | unsigned short | 2 bytes | 0.1hPa | Get | ○ | | |
| | | 0x0000–0xFFFD (0.0-6553.3hPa) | | | | | | | |

Note: In the “Announcement at status change” column, ○ denotes mandatory processing when the property is implemented.

(1) Operation status (inherited from the device object super class property)

This property indicates whether the functions unique to this class are ready to be used (ON) or not (OFF). In the case of a node equipped with this class in which functions specific to this class start operating upon startup of the node, this property may be implemented with the value fixed at 0x30 (operation status ON).

(2) Air pressure measurement

Indicates air pressure measurements in units of 0.1hPa. The property value range is 0x0000-0xFFFD (0.0-6553.3hPa). If the property values of actual devices exceed the property value range, the overflow code 0xFFFF shall be used. If the property values of actual devices are lower than the lower limit of the property value range, the underflow code 0xFFFE shall be used.

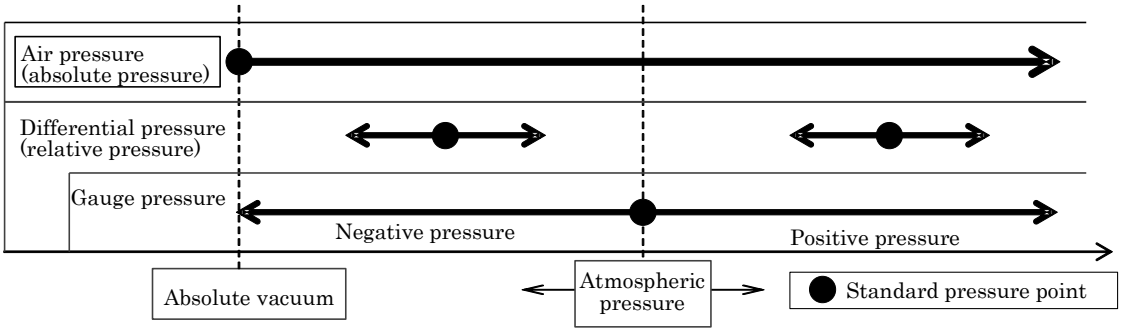


Fig. 3-2 (Ref.) Image of the various pressures



© 2000 - 2023 ECHONET Consortium

## 3．2 Air Conditioner-related Device Class Group

This section specifies detailed codes and properties for each ECHONET object belonging to the air conditioner-related device class group (class group code X1 = 0x01). Table 3-2 shows a list of classes for which detailed specifications are provided. In the requirements of classes, “Mandatory” means that the device mounting each class must mount a combination of its property and service.

**Table 3-2 List of Objects of Air Conditioner-related Device Class Group**

| Group code | Class code | Class name | Whether or not detailed requirements are provided | Remark |
|---|---|---|---|---|
| 0x01 | 0x00 to 0x2F | Reserved for future use | | |
| | 0x30 | Home air conditioner | ○ | |
| | 0x31 | Cold blaster | | |
| | 0x32 | Electric fan | | |
| | 0x33 | Ventilation fan | ○ | |
| | 0x34 | Air conditioner ventilation fan | ○ | |
| | 0x35 | Air cleaner | ○ | |
| | 0x36 | Cold blast fan | | |
| | 0x37 | Circulator | | |
| | 0x38 | Dehumidifier | | |
| | 0x39 | Humidifier | ○ | |
| | 0x3A | Ceiling fan | | |
| | 0x3B | Electric Kotatsu | | |
| | 0x3C | Electric heating pad | | |
| | 0x3D | Electric blanket | | |
| | 0x3E | Space heater | | |
| | 0x3F | Panel heater | | |
| | 0x40 | Electric carpet | | |
| | 0x41 | Floor heater | | |
| | 0x42 | Electric heater | ○ | |
| | 0x43 | Fan heater | ○ | |
| | 0x44 | Battery charger | | |
| | 0x45 | Reserved for future use | | Class name up to Release H: “Package-type commercial air conditioner (indoor unit)” |
| | 0x46 | Reserved for future use | | Class name up to Release H: “Package-type commercial air conditioner (outdoor unit)” |
| | 0x47 | Package-type commercial air conditioner thermal storage unit | | |
| | 0x48 | Commercial fan coil unit | | |
| | 0x49 | Commercial air conditioning cold source (chiller) | | |



© 2000 - 2023 ECHONET Consortium

| | | | | |
|---|---|---|---|---|
| | 0x50 | Commercial air conditioning hot source (boiler) | | |
| | 0x51 | Air-conditioning VAV for commercial applications | | |
| | 0x52 | Air handling unit (air-conditioning) for commercial applications | | |
| | 0x53 | Unit-cooler | | |
| | 0x54 | Condensing unit for commercial applications | | |
| | 0x55 | Electric storage heater | ○ | |
| | 0x56 | Package-type commercial air conditioner (indoor unit) (except those for facilities) | ○ | |
| | 0x57 | Package-type commercial air conditioner (outdoor unit) (except those for facilities) | ○ | |
| | 0x58 | Gas heat pump-type commercial air conditioner (indoor unit) | ○ | |
| | 0x59 | Gas heat pump-type commercial air conditioner (indoor unit) | ○ | |
| | 0x5A | Range hood | | |
| | 0x5B to 0xFF | Reserved for future use. | | |

Note: ○ indicates a detail is explained including a property structure in APPENDIX.



© 2000 - 2023 ECHONET Consortium

## 3. 2. 1 Requirements for home air conditioner class

Class group code : 0x01

Class code : 0x30

Instance code : 0x01–0x7F (0x00: All-instance specification code)

| Property name | EPC | Contents of property<br>Value range (decimal notation) | Data type | Data size | Unit | Access rule | Man-datory | Announcement at status change | Remark |
|---|---|---|---|---|---|---|---|---|---|
| Operation status | 0x80 | This property indicates the ON/OFF status.<br>ON=0x30, OFF=0x31 | unsigned char | 1 byte | — | Set<br>Get | ○<br>○ | ○ | |
| Power-saving operation setting | 0x8F | This property indicates whether the device is operating in power-saving mode.<br>Operating in power-saving mode =0x41<br>Operating in normal operation mode =0x42 | unsigned char | 1 byte | – | Set/Get | ○ | ○ | |
| Operation mode setting | 0xB0 | Used to specify the operation mode (“automatic,” “cooling,” “heating,” “dehumidification,” “air circulation” or “other”), and to acquire the current setting.<br>The following values shall be used:<br>Automatic: 0x41<br>Cooling: 0x42<br>Heating: 0x43<br>Dehumidification: 0x44<br>Air circulation: 0x45<br>Other: 0x40 | unsigned char | 1 byte | – | Set/Get | ○ | ○ | |
| Automatic temperature control setting | 0xB1 | Used to specify whether or not to use the automatic temperature control function, and to acquire the current setting.<br>Automatic = 0x41<br>Non-automatic = 0x42 | unsigned char | 1 byte | – | Set/Get | | | |
| Normal/high-speed/silent operation setting | 0xB2 | Used to specify the type of operation (“normal,” “high-speed” or “silent”), and to acquire the current setting.<br>Normal operation: 0x41<br>High-speed operation: 0x42<br>Silent operation: 0x43 | unsigned char | 1 byte | – | Set/Get | | | |
| Set temperature value | 0xB3 | Used to set the temperature and to acquire the current setting.<br>0x00–0x32 (0–50°C) | unsigned char | 1 byte | °C | Set/Get | ○ | | |
| Set value of relative humidity in dehumidifying mode | 0xB4 | Used to set the relative humidity for the dehumidification mode and to acquire the current setting.<br>0x00–0x64 (0–100%) | unsigned char | 1 byte | % | Set/Get | | | |
| Set temperature value in cooling mode | 0xB5 | Used to set the temperature for the cooling mode and to acquire the current setting.<br>0x00–0x32 (0–50°C) | unsigned char | 1 byte | °C | Set/Get | | | |



© 2000 - 2023 ECHONET Consortium

| | | | | | | | | | |
|---|---|---|---|---|---|---|---|---|---|
| Set temperature value in heating mode | 0xB6 | Used to set the temperature for the heating mode and to acquire the current setting.<br>0x00–0x32 (0–50°C) | unsigned char | 1 byte | °C | Set/Get | | | |
| Set temperature value in dehumidifying mode | 0xB7 | Used to set the temperature for the dehumidification mode and to acquire the current setting.<br>0x00–0x32 (0–50°C) | unsigned char | 1 byte | °C | Set/Get | | | |
| Rated power consumption | 0xB8 | Rated power consumption in each operation mode of cooling/heating/dehumidifying/circulation<br>0x0000–0xFFFD (0–65533W)<br>Cooling: heating: dehumidifying: blast | unsigned short × 4 | 8 bytes | W | Get | | | |
| Measured value of current consumption | 0xB9 | Measured value of current consumption<br>0x0000–0xFFFD (0–6553.3A) | unsigned short | 2 bytes | 0.1A | Get | | | |
| Measured value of room relative humidity | 0xBA | Measured value of room relative humidity<br>0x00–0x64 (0–100%) | unsigned char | 1 byte | % | Get | | | |
| Measured value of room temperature | 0xBB | Measured value of room temperature<br>0x81–0x7D (-127–125°C) | signed char | 1 byte | °C | Get | ○ | | |
| Set temperature value of user remote control | 0xBC | Set temperature value of user remote control<br>0x00–0x32 (0–50°C) | unsigned char | 1 byte | °C | Get | | | |
| Measured cooled air temperature | 0xBD | This property indicates the measured cooled air temperature at the outlet.<br>0x81–0x7D (-127–125°C) | signed char | 1 byte | °C | Get | | | |
| Measured outdoor air temperature | 0xBE | This property indicates the measured outdoor air temperature.<br>0x81–0x7D (-127–125°C) | signed char | 1 byte | °C | Get | | | |
| Relative temperature setting | 0xBF | Used to set the relative temperature relative to the target temperature for an air conditioner operation mode, and to acquire the current setting.<br>0x81–0x7D (-12.7°C–12.5°C) | signed char | 1 byte | 0.1 °C | Set/Get | | | |
| Air flow rate setting | 0xA0 | Used to specify the air flow rate or use the function to automatically control the air flow rate, and to acquire the current setting. The air flow rate shall be selected from among the 8 predefined levels.<br>Automatic air flow rate control function used = 0x41<br>Air flow rate = 0x31–0x38 | unsigned char | 1 byte | – | Set/Get | ○ | ○ | |
| Automatic control of air flow direction setting | 0xA1 | Used to specify whether or not to use the automatic air flow direction control function, to specify the plane(s) (vertical and/or horizontal) in which the automatic air flow direction control function is to be used, and to acquire the current setting.<br>Automatic = 0x41, non-automatic = 0x42, automatic (vertical) = 0x43, automatic (horizontal) = 0x44 | unsigned char | 1 byte | – | Set/Get | | | |



© 2000 - 2023 ECHONET Consortium

| | | | | | | | | | |
|---|---|---|---|---|---|---|---|---|---|
| Automatic swing of air flow setting | 0xA3 | Used to specify whether or not to use the automatic air flow swing function, to specify the plane(s) (vertical and/or horizontal) in which the automatic air flow swing function is to be used, and to acquire the current setting.<br>Automatic air flow swing function not used = 0x31, used (vertical) = 0x41, used (horizontal) = 0x42, used (vertical and horizontal) = 0x43 | unsigned char | 1 byte | – | Set/Get | | | |
| Air flow direction (vertical) setting | 0xA4 | Used to specify the air flow direction in the vertical plane by selecting a pattern from among the 5 predefined patterns, and to acquire the current setting.<br>Uppermost = 0x41, lowermost = 0x42, central = 0x43, midpoint between uppermost and central = 0x44, midpoint between lowermost and central = 0x45 | unsigned char | 1 byte | – | Set/Get | | | |
| Air flow direction (horizontal) setting | 0xA5 | Used to specify the air flow direction(s) in the horizontal plane by selecting a pattern from among the 31 predefined patterns, and to acquire the current setting.<br>Rightward = 0x51, leftward = 0x60, central = 0x54, rightward and leftward = 0x61 (for a full list of the predefined patterns, see the table in the subsection defining the detailed requirements for this property. | unsigned char | 1 byte | – | Set/Get | | | |
| Special state | 0xAA | This property indicates if the air conditioner is in a “special” state (i.e. the “defrosting,” “preheating,” or “heat removal” state).<br>“Normal operation” state = 0x40, “Defrosting” state = 0x41, “Preheating” state = 0x42, “Heat removal” state = 0x43 | unsigned char | 1 byte | – | Get | | | |
| Non-priority state | 0xAB | Used to indicate when the air conditioner is in a “non-priority” state.<br>“Normal operation” state = 0x40, “Non-priority” state = 0x41 | unsigned char | 1 byte | – | Get | | | |
| Ventilation function setting | 0xC0 | Used to specify whether or not to use the ventilation function, to specify the ventilation direction, and to acquire the current setting.<br>Ventilation function ON (outlet direction) = 0x41, ventilation function OFF = 0x42, ventilation function ON (intake direction) = 0x43, ventilation function ON (outlet and intake direction) = 0x44 | unsigned char | 1 byte | – | Set/Get | | | |
| Humidifier function setting | 0xC1 | Used to specify whether or not to use the humidifier function, and to acquire the current setting.<br>Humidifier function ON = 0x41, Humidifier function OFF = 0x42 | unsigned char | 1 byte | – | Set/Get | | | |
| Ventilation air flow rate setting | 0xC2 | Used to specify the ventilation air flow rate by selecting a level from among the predefined levels, and to acquire the current setting.<br>Automatic control of ventilation air flow rate = 0x41, ventilation air flow rate = 0x31–0x38 | unsigned char | 1 byte | – | Set/Get | | | |



© 2000 - 2023 ECHONET Consortium

| | | | | | | | | | |
|---|---|---|---|---|---|---|---|---|---|
| Degree of humidification setting | 0xC4 | Used to specify the degree of humidification to achieve by selecting a level from among the predefined levels, and to acquire the current setting.<br>Automatic control of the degree of humidification = 0x41<br>Degree of humidification = 0x31–0x38 | unsigned char | 1 byte | – | Set /Get | | | |
| Mounted air cleaning method | 0xC6 | A bitmap indicates mounted method of exercising air cleaning function.<br>Bit 0: Information about electrical dust collection method mounting<br>0 - Not mounted<br>1 - Mounted<br>Bit 1: Information about cluster ion method mounting<br>0 - Not mounted<br>1 – Mounted | unsigned char | 1 byte | – | Get | | | |
| Air purifier function setting | 0xC7 | An 8-byte array used to specify, for each type of air purifier function, whether or not to use the air purifier function and the degree of air purification to achieve with the air purifier function, and to acquire the current settings.<br>Element 0: Indicates whether or not to use the electrical dust collection-based air purifier function.<br>Element 1: Indicates whether or not to use the cluster ion-based air purifier function.<br>Elements 2 to 7: Reserved for future use. | unsigned char × 8 | 1 byte × 8 | – | SetM /GetM<br>Set /Get | | | |
| Mounted air refresh method | 0xC8 | A bitmap indicates mounted method for exercising refresh function.<br>Bit 0: Information about minus ion method mounting<br>0 - Not mounted<br>1 - Mounted<br>Bit 1: Information about cluster ion method mounting<br>0 - Not mounted<br>1 – Mounted | unsigned char | 1 byte | – | Get | | | |
| Air refresher function setting | 0xC9 | An 8-byte array used to specify, for each type of air refresher function, whether or not to use the air refresher function and the degree of air refreshing to achieve with the air refresher function, and to acquire the current settings.<br>Element 0: Indicates whether or not to use the minus ion-based air refresher function.<br>Element 1: Indicates whether or not to use the cluster ion-based air refresher function.<br>Elements 2–7: Reserved for future use. | unsigned char × 8 | 1 byte × 8 | – | SetM /GetM<br>Set /Get | | | |
| Mounted self-cleaning method | 0xCA | A bitmap indicates mounted method for exercising self-cleaning function. | unsigned char | 1 byte | – | Get | | | |



© 2000 - 2023 ECHONET Consortium

| | | | | | | | | | |
|---|---|---|---|---|---|---|---|---|---|
| | | Bit 0: Information about ozone cleaning method mounting<br>0 - Not mounted<br>1 - Mounted<br>Bit 1: Information about drying method mounting<br>0 - Not mounted<br>1 – Mounted | | | | | | | |
| Self-cleaning function setting | 0xCB | An 8-byte array used to specify, for each type of self-cleaning function, whether or not to use the self-cleaning function and the degree of self-cleaning to achieve with the self-cleaning function, and to acquire the current settings.<br>Element 0: Indicates whether or not to use the ozone-based self-cleaning function.<br>Element 1: Indicates whether or not to use the drying-based self-cleaning function.<br>Elements 2–7: Reserved for future use. | unsigned char × 8 | 1 byte × 8 | – | SetM /GetM<br>Set /Get | | | |
| Special function setting | 0xCC | Used to specify the “special function” to use, and to acquire the current setting.<br>No setting: 0x40, clothes dryer function: 0x41, condensation suppressor function: 0x42, mite and mold control function: 0x43, active defrosting function: 0x44<br>0x45–: Reserved for future use. | unsigned char | 1 byte | – | Set /Get | | | |
| Operation status of components | 0xCD | This property indicates the operation status of components of the air conditioner in a bitmap format.<br>Bit 0: Operation status of the compressor:<br>0: Not operating<br>1: In operation<br>Bit 1: Operation status of the thermostat:<br>0: Thermostat OFF<br>1: Thermostat ON<br>Bits 2–7: Reserved for future use. | unsigned char | 1 byte | – | Get | | | |
| Thermostat setting override function | 0xCE | Used to specify whether or not to allow the air conditioner to operate ignoring its thermostat setting.<br>Normal setting = 0x40, thermostat setting override function ON = 0x41, thermostat setting override function OFF = 0x42 | unsigned char | 1 byte | – | Set/Get | | | |
| Air purification mode setting | 0xCF | Used to set the air purification mode setting ON/OFF and to acquire the current setting.<br>Air purification ON=0x41, OFF=0x42 | unsigned char | 1 byte | – | Set/Get | | | |
| Buzzer | 0xD0 | Used to generate a buzzer sound.<br>Buzzer sound generation =0x41 | unsigned char | 1 byte | – | Set | | | |
| ON timer-based reservation setting | 0x90 | Used to specify whether or not to use the ON timer (time-based reservation function, relative time-based reservation function or both), and to acquire the current setting. | unsigned char | 1 byte | – | Set/Get | | | |



© 2000 - 2023 ECHONET Consortium

| | | | | | | | | | |
|---|---|---|---|---|---|---|---|---|---|
| | | Both the time- and relative time-based reservation functions are ON = 0x41, both reservation functions are OFF = 0x42, time-based reservation function is ON = 0x43, relative time-based reservation function is ON = 0x44 | | | | | | | |
| ON timer setting (time) | 0x91 | Used to specify the time for the time-based reservation function in the HH:MM format and to acquire the current setting.<br>0–0x17: 0–0x3B<br>(= 0–23): (= 0–59) | unsigned char × 2 | 2 bytes | – | Set/Get | | | |
| ON timer setting (relative time) | 0x92 | Used to specify the relative time for the relative time-based reservation function in the HH:MM format and to acquire the current setting.<br>0–0xFF: 0–0x3B<br>(= 0–255): (= 0–59) | unsigned char × 2 | 2 bytes | – | Set/Get | | | |
| OFF timer-based reservation setting | 0x94 | Used to specify whether or not to use the OFF timer (time-based reservation function, relative time-based reservation function or both), and to acquire the current setting.<br>Both the time- and relative time-based reservation functions are ON = 0x41, both reservation functions are OFF = 0x42, time-based reservation function is ON = 0x43, relative time-based reservation function is ON = 0x44 | unsigned char | 1 byte | – | Set/Get | | | |
| OFF timer setting (time) | 0x95 | Used to specify the time for the time-based reservation function in the HH:MM format and to acquire the current setting.<br>0–0x17: 0–0x3B<br>(= 0–23): (= 0–59) | unsigned char × 2 | 2 bytes | – | Set/Get | | | |
| OFF timer setting (relative time) | 0x96 | Used to specify the relative time for the relative time-based reservation function in the HH:MM format and to acquire the current setting.<br>0–0xFF: 0–0x3B<br>(= 0–255): (= 0–59) | unsigned char × 2 | 2 bytes | – | Set/Get | | | |

Note: In the “Announcement at status change” column, ○ denotes mandatory processing when the property is implemented.

(1) Operation status (inherited from the device object super class property.)

Used to specify whether to turn on or off the household air conditioner, and to acquire the current operation status. 0x30 and 0x31 shall be used for the ON and OFF states, respectively.

(2) Power-saving operation setting (inherited from the device object super class property)

Used to specify the operation mode of the household air conditioner (“normal mode” (not saving power) or “power-saving mode”) and to acquire the current operation status. 0x41 and 0x42 shall be used for power-saving mode and normal mode (not saving power), respectively. For “Life watching service,” “Announcement at status change” is mandatory.

(3) Operation mode setting



© 2000 - 2023 ECHONET Consortium

Used to specify the operation mode of the household air conditioner (“automatic,” “cooling,” “heating,” “dehumidification,” “air circulator” or “other”) and to acquire the current setting. “Other” represents an operation mode other than the 5 modes. 0x41, 0x42, 0x43, 0x44, 0x45 and 0x40 shall be used for “automatic,” “cooling,” “heating,” “dehumidification,” “air circulator” and “other,” respectively. It is only required to implement the property values that correspond to the modes supported by the actual piece of equipment in which this class is implemented. For example, if the piece of equipment in which this class is implemented does not have an air circulator function, it is not necessary to implement the value for the air circulator mode (0x45).

This property shall be effective even when the value of the “operation status” property (0x80) is OFF (0x31).

(4) Automatic temperature control setting

Used (i) to specify whether or not to use an automatic temperature control function of a household air conditioner that allows the air conditioner to operate based on an automatic temperature setting calculation algorithm, etc. implemented in the main body of the air conditioner and without using as the target any “temperature setting” property (EPC = 0xB3, 0xB5, 0xB6 or 0xB7) and (ii) to acquire the current setting.

0x41 and 0x42 shall be used for the ON and OFF states, respectively.

This property shall be effective even when the value of the “operation status” property (0x80) is OFF (0x31).

(5) Normal/high-speed/silent operation setting

Used to specify the type of operation (“normal,” “high-speed” or “silent”) and to acquire the current setting. 0x41, 0x42 and 0x43 shall be used for “normal,” “high-speed” and “silent,” respectively. This property can be used in combination with the “operation mode setting” property (EPC = 0xB0) to achieve “high-speed (rapid) cooling,” “high-speed (rapid) heating,” “high-speed (strong) dehumidification,” etc. The 3 types of operation (“normal,” “high-speed” and “silent”) are mutually exclusive.

(6) Set temperature value

Used to set the temperature (°C) for the current operation mode of the air conditioner that is specified by the “operation mode setting” property, and to acquire the current setting. The value of this property shall be used as the target temperature when the air conditioner does not have an automatic temperature control function or when it has an automatic temperature control function that is disabled (by the “‘automatic temperature control’ setting” property). The value to be used when the specified target temperature is indeterminable as a result of enabling the automatic temperature control function shall be 0xFD (temperature indeterminable).



© 2000 - 2023 ECHONET Consortium

This property shall be effective even when the value of the “operation status” property (0x80) is OFF (0x31).

(7) Set value of relative humidity in dehumidifying mode

Used to set the relative humidity (in %) for the “dehumidification” mode (as specified by the “operation mode setting” property (EPC = 0xB0)), and to acquire the current setting.
Implementation of this property allows values to be specified and acquired even when a mode other than the “dehumidification” mode is specified by the “operation mode setting” property (EPC = 0xB0).
This property shall be effective even when the value of the “operation status” property (0x80) is OFF (0x31).

(8) Set temperature value in cooling mode

Used to set the temperature (°C) for the “cooling” mode (as specified by the “operation mode setting” property (EPC = 0xB0)), and to acquire the current setting. Implementation of this property allows values to be specified and referenced even when a mode other than the “cooling” mode is specified by the “operation mode setting” property (EPC = 0xB0).
The value of this property shall be used as the target temperature when the air conditioner does not have an automatic temperature control function or when it has an automatic temperature control function that is disabled (by the “‘automatic temperature control’ setting” property).
The content of this property must match the content of the “temperature setting” property (EPC = 0xB3).
This property shall be effective even when the value of the “operation status” property (0x80) is OFF (0x31).

(9) Set temperature value in heating mode

Used to set the temperature (°C) for the “heating” mode (as specified by the “operation mode setting” property (EPC = 0xB0)), and to acquire the current setting. Implementation of this property allows values to be specified and referenced even when a mode other than the “heating” mode is specified by the “operation mode setting” property (EPC = 0xB0).
The value of this property shall be used as the target temperature when the air conditioner does not have an automatic temperature control function or when it has an automatic temperature control function that is disabled (by the “‘automatic temperature control’ setting” property).
The content of this property must match the content of the “temperature setting” property (EPC = 0xB3).
This property shall be effective even when the value of the “operation status” property (0x80) is



© 2000 - 2023 ECHONET Consortium

OFF (0x31).

(10) Set temperature value in dehumidifying mode

Used to set the temperature (°C) for the “dehumidification” mode (as specified by the “operation mode setting” property (EPC = 0xB0)), and to acquire the current setting. Implementation of this property allows values to be specified and referenced even when a mode other than the “dehumidification” mode is specified by the “operation mode setting” property (EPC = 0xB0).
The value of this property shall be used as the target temperature when the air conditioner does not have an automatic temperature control function or when it has an automatic temperature control function that is disabled (by the “‘automatic temperature control’ setting” property).
The content of this property must match the content of the “temperature setting” property (EPC = 0xB3).
This property shall be effective even when the value of the “operation status” property (0x80) is OFF (0x31).

(11) Rated power consumption

This property indicates, in watts, the rated power consumption values (brochure values) for the “cooling,” “heating,” “dehumidification” and “air circulator” modes. The range of rated power consumption value for each of the 4 modes shall be 0x0000 to 0xFFFD (0 to 65533W) and the bytes shall be used in such a manner that the four values are indicated in the order stated in the previous sentence. When the actual piece of equipment does not support one or more of the four modes, the underflow code 0xFFFE shall be used for the unsupported mode(s).
This property shall be effective even when the value of the “operation status” property (0x80) is OFF (0x31).

(12) Measured value of current consumption

This property indicates the present measured electric current consumption of the air conditioner in 0.1A increments. When the measured electric current is alternating current, the effective value shall be indicated. The property value range shall be 0x0000 to 0xFFFD (0 to 6553.3A). When the property value of the actual piece of equipment is higher than the upper limit of the property value range, the overflow code 0xFFFF shall be used. When the property value is lower than the lower limit of the property value range, the underflow code 0xFFFE shall be used.

(13) Measured value of room relative humidity

This property indicates the measured indoor relative humidity in %. The property value range shall be 0x00 to 0x64 (0 to 100%). When the property value of the actual piece of equipment is higher



© 2000 - 2023 ECHONET Consortium

than the upper limit of the property value range, the overflow code 0xFF shall be used. When the property value is lower than the lower limit of the property value range, the underflow code 0xFE shall be used. When the measurement value cannot be returned, 0xFD shall be used.
This property shall be effective even when the value of the “operation status” property (0x80) is OFF (0x31).

(14) Measured value of room temperature

This property indicates the measured room temperature (°C). The property value range shall be 0x81 to 0x7D (-127 to 125°C). When the property value of the actual piece of equipment is higher than the upper limit of the property value range, the overflow code 0x7F shall be used. When the property value is lower than the lower limit of the property value range, the underflow code 0x80 shall be used. When the measurement value cannot be returned, 0x7E shall be used.
This property shall be effective even when the value of the “operation status” property (0x80) is OFF (0x31).

(15) Set temperature value of user remote control

This property indicates the last temperature (°C) set by the user using a remote controller unit for the household air conditioner. This property is mainly used for reference purposes after changing the temperature setting for the household air conditioner by means of a controller, etc.
This property shall be effective even when the value of the “operation status” property (0x80) is OFF (0x31).

(16) Measured cooled air temperature

This property indicates the measured cooled air temperature (°C) at the outlet. The property value range shall be 0x81 to 0x7D (-127 to 125°C). When the property value of the actual piece of equipment is higher than the upper limit of the property value range, the overflow code 0x7F shall be used. When the property value is lower than the lower limit of the property value range, the underflow code 0x80 shall be used. When the measurement value cannot be returned, 0x7E shall be used.
This property shall be effective even when the value of the “operation status” property (0x80) is OFF (0x31).

(17) Measured outdoor air temperature

This property indicates the measured air temperature (°C) (outdoor atmospheric temperature) where the outdoor unit is installed. The property value range shall be 0x81 to 0x7D (-127 to 125°C). When the property value of the actual piece of equipment is higher than the upper limit of



© 2000 - 2023 ECHONET Consortium

the property value range, the overflow code 0x7F shall be used. When the property value is lower than the lower limit of the property value range, the underflow code 0x80 shall be used. When the measurement value cannot be returned, 0x7E shall be used.
This property shall be effective even when the value of the “operation status” property (0x80) is OFF (0x31).

(18) Relative temperature setting

Used to specify, in 0.1°C increments, the relative temperature relative to the target temperature (i.e. the temperature differential above or below the target temperature the user wishes to achieve) for an operation mode of the household air conditioner and to acquire the current setting. It is also possible to use this property to specify a relative temperature for an operation mode that does not use an absolute value of temperature as the target such as the “automatic” mode. The property value range shall be 0x81 to 0x7D (-12.7 to 12.5°C). 0xF6 shall be used for a differential of 1.0°C below the target temperature and 0x0A shall be used for a differential of 1.0°C above the target temperature.
When the property value of the actual piece of equipment is higher than the upper limit of the property value range, the overflow code 0x7F shall be used. When the property value is lower than the lower limit of the property value range, the underflow code 0x80 shall be used. When the setting cannot be returned, 0x7E shall be used.
This property shall be effective even when the value of the “operation status” property (0x80) is OFF (0x31).

(19) Air flow rate setting

Used to specify the air flow rate or to specify using the function to automatically control the air flow rate, and to acquire the current setting. The air flow rate shall be selected from among the 8 levels predefined in the 0x31 to 0x38 range. When the automatic air flow rate control function is used, the property value shall be 0x41. The air flow rate values for the 8 levels may be defined freely, as long as 0x31 and 0x38 are used for the minimum and maximum air flow rates, respectively.
This property shall be effective even when the value of the “operation status” property (0x80) is OFF (0x31). For “Life watching service,” “Announcement at status change” is mandatory.

(20) Automatic control of air flow direction setting

Used to specify whether or not to use the automatic air flow direction control function, to specify the plane(s) (vertical and/or horizontal) in which the automatic air flow direction control function is to be used, and to acquire the current setting.



© 2000 - 2023 ECHONET Consortium

Automatic (vertical and horizontal) = 0x41, non-automatic = 0x42, automatic (vertical) = 0x43, automatic (horizontal) = 0x44

It is only required to implement the property values that correspond to the functions provided by the actual piece of equipment in which this class is implemented.

This property shall be effective even when the value of the “operation status” property (0x80) is OFF (0x31).

(21) Automatic swing of air flow setting

Used to specify whether or not to use the automatic air flow swing function, to specify the plane(s) (vertical and/or horizontal) in which the automatic air flow swing function is to be used, and to acquire the current setting.

Automatic air flow swing function not used = 0x31, used (vertical) = 0x41, used (horizontal) = 0x42, used (vertical and horizontal) = 0x43

It is only required to implement the property values that correspond to the functions provided by the actual piece of equipment in which this class is implemented.

(22) Air flow direction (vertical) setting

Used to specify the air flow direction in the vertical plane by selecting a pattern from among the 5 predefined patterns and to acquire the current setting.

Uppermost = 0x41, lowermost = 0x42, central = 0x43, midpoint between uppermost and central = 0x44, midpoint between lowermost and central = 0x45

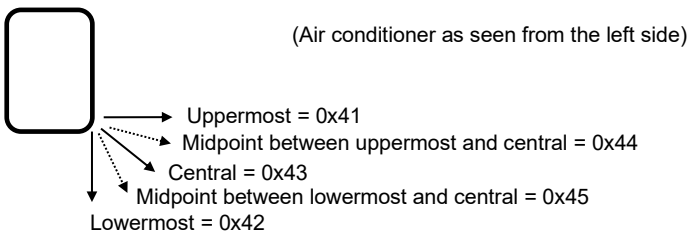


It is only required to implement the property values that correspond to the directions supported by the actual piece of equipment in which this class is implemented. Applicability of this property to the automatic air flow swing function shall be equipment-dependent.

(23) Air flow direction (horizontal) setting



© 2000 - 2023 ECHONET Consortium

Used to specify the air flow direction(s) in the horizontal plane by selecting a pattern (i.e. “left,” “midpoint between left and central,” “central,” “midpoint between right and central” or “right” or a combination of two or more of the 5 directions; see the table below (○ = active)), and to acquire the current setting. It is only required to implement the property values that correspond to the directions supported by the actual piece of equipment in which this class is implemented. Applicability of this property to the automatic air flow swing function shall be equipment-dependent.

(Before "Version 2.01 Release a," the air flow directions, right=0x41, left=0x42, central=0x43 and left-right=0x44 were allocated as in table below.)

| Code | Left | Left center | Center | Right center | Right | Remarks | Code | Left | Left center | Center | Right center | Right | Remarks |
|---|---|---|---|---|---|---|---|---|---|---|---|---|---|
| 0x41 | × | × | × | ○ | ○ | Earlier version "Right" | | | | | | | |
| 42 | ○ | ○ | × | × | × | Earlier version "Left" | | | | | | | |
| 43 | × | ○ | ○ | ○ | × | Earlier version "Center" | | | | | | | |
| 44 | ○ | ○ | × | ○ | ○ | Earlier version "Left-right" | 0x60 | ○ | × | × | × | × | |
| 51 | × | × | × | × | ○ | | 61 | ○ | × | × | × | ○ | |
| 52 | × | × | × | ○ | × | | 62 | ○ | × | × | ○ | × | |
| 0x53: Not used (because of 0x41 = earlier version "right") | | | | | | | 63 | ○ | × | × | ○ | ○ | |
| 54 | × | × | ○ | × | × | | 64 | ○ | × | ○ | × | × | |
| 55 | × | × | ○ | × | ○ | | 65 | ○ | × | ○ | × | ○ | |
| 56 | × | × | ○ | ○ | × | | 66 | ○ | × | ○ | ○ | × | |
| 57 | × | × | ○ | ○ | ○ | | 67 | ○ | × | ○ | ○ | ○ | |
| 58 | × | ○ | × | × | × | | 0x68: Not used (because of 0x42 = earlier version "left") | | | | | | |
| 59 | × | ○ | × | × | ○ | | 69 | ○ | ○ | × | × | ○ | |
| 5A | × | ○ | × | ○ | × | | 6A | ○ | ○ | × | ○ | × | |
| 5B | × | ○ | × | ○ | ○ | | 0x6B: Not used (because of 0x44 = earlier version "left-right") | | | | | | |
| 5C | × | ○ | ○ | × | × | | 6C | ○ | ○ | ○ | × | × | |
| 5D | × | ○ | ○ | × | ○ | | 6D | ○ | ○ | ○ | × | ○ | |
| 0x5E: Not used (because of 0x43 = earlier version "center") | | | | | | | 6E | ○ | ○ | ○ | ○ | × | |
| 5F | × | ○ | ○ | ○ | ○ | | 6F | ○ | ○ | ○ | ○ | ○ | |

The five directions are as indicated at right.

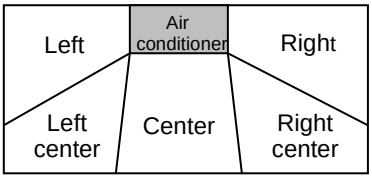


(Top view)

(24) Special state

This property indicates when the household air conditioner is in a “special” state, namely, the “defrosting,” “preheating,” or “heat removal” state.

0x41, 0x42 and 0x43 shall be used for the “defrosting,” “preheating,” and “heat removal” states,



© 2000 - 2023 ECHONET Consortium

respectively. When the air conditioner is in a state other than the “defrosting,” “preheating” and “heat removal” states, 0x40 shall be used.
The “preheating” state shall mean a state in which the compressor is being preheated with the indoor unit fan rotating at a low speed or not rotating, after the heating function is activated or after completion of a defrosting cycle, to allow the air conditioner to supply warm air.
The “heat removal” state shall mean a state in which a fan (the indoor unit fan in most cases) is rotating and the refrigerating cycle is operating to release the residual heat from the air conditioner after the air conditioner is turned off (especially after being used in the heating mode).
This property shall be effective even when the value of the “operation status” property (0x80) is OFF (0x31).

(25) Non-priority state

This property indicates when the household air conditioner is in a “non-priority” state. An example of a household air conditioner (indoor unit) in a “non-priority” state would be one that shares an outdoor unit with another air conditioner (indoor unit) and cannot operate in some of its operating modes because of limitations imposed by the operating mode of the other air conditioner (indoor unit).
0x40 and 0x41 shall be used for the “normal operation” and “non-priority” states, respectively.
This property shall be effective even when the value of the “operation status” property (0x80) is OFF (0x31).

(26) Ventilation function setting

Used to specify whether or not to use the ventilation function of the household air conditioner, to specify the ventilation direction, and to acquire the current setting.
Ventilation function ON (outlet direction) = 0x41, ventilation function OFF = 0x42, ventilation function ON (intake direction) = 0x43, ventilation function ON (intake and outlet directions) = 0x44
This property shall be effective even when the value of the “operation status” property (0x80) is OFF (0x31).

(27) Humidifier function setting

Used to specify whether or not to use the humidifier function of the household air conditioner, and to acquire the current setting. Humidifier function ON = 0x41, humidifier function OFF = 0x42
This property shall be effective even when the value of the “operation status” property (0x80) is OFF (0x31).



© 2000 - 2023 ECHONET Consortium

(28) Ventilation air flow rate setting

Used to specify the ventilation air flow rate by selecting a level from among the 8 predefined levels (0x31 to 0x38) or to specify using the function to automatically control the ventilation air flow rate (0x41 = automatic ventilation air flow rate control used), and to acquire the current setting.

The ventilation air flow rate values for the 8 levels may be defined freely, as long as 0x31 and 0x38 are used for the minimum and maximum ventilation air flow rates, respectively.

This property shall be effective even when the value of the “operation status” property (0x80) is OFF (0x31).

(29) Degree of humidification setting

Used to specify the amount of moisture to add for humidification by selecting a level from among the 8 predefined levels (0x31 to 0x38) or to specify using the function to automatically control the amount of moisture to add (0x41 = automatic control used), and to acquire the current setting. The moisture values for the 8 levels may be defined freely, as long as 0x31 and 0x38 are used for the minimum and maximum amounts, respectively.

This property shall be effective even when the value of the “operation status” property (0x80) is OFF (0x31).

(30) Mounted air cleaning method

This property indicates, in bitmap format, the air purifier function(s) supported by the air conditioner. A value of “0” for Bit 0 or Bit 1 shall mean that the air conditioner is not equipped with an electrical dust collection-based or cluster ion-based air purifier function, respectively, and a value of “1” for Bit 0 or Bit 1 shall mean that the air conditioner is equipped with an electrical dust collection-based or cluster ion-based air purifier function, respectively.

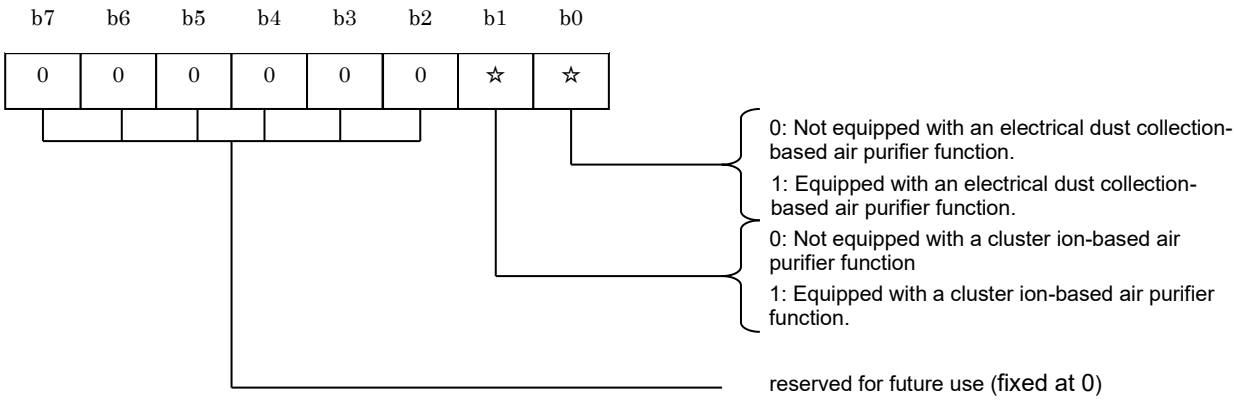


This property shall be effective even when the value of the “operation status” property (0x80) is



© 2000 - 2023 ECHONET Consortium

OFF (0x31).

(31) Air purifier function setting

An 8-element array is used to specify, for each type of air purifier function, whether or not to use the air purifier function, whether or not to use the function to automatically control the degree of air purification, the degree of air purification to achieve with the air purifier function when the function to automatically control the degree of air purification is not used, and to acquire the current settings.

Each element of the array is used for a different type of air purifier function:

Element 0: Electrical dust collection type
Element 1: Cluster ion type
Elements 2 to 7: Reserved for future use.

The size of each element is 1 byte. Bits 0 through 2 are used to specify the degree of air purification to achieve with the air purifier function by selecting a level from the 8 predefined levels (000b to 111b). The degree of air purification for the 8 levels may be defined freely, as long as 000b and 111b are used for the lowest and highest levels, respectively. Bit 3 specifies whether or not to use the air purifier function ("OFF" when the value of Bit 3 is "0" and "ON" when the value of Bit 3 is "1"). Bit 4 specifies whether or not to use the function to automatically control the degree of air purification for the air purifier function ("non-automatic" when the value of Bit 4 is "0" and "automatic" when the value of Bit 4 is "1"). When the value of Bit 4 is "1" (automatic), the degree of air purification specified by Bits 0 through 2 becomes ineffective. The figure below illustrates the composition of an element.

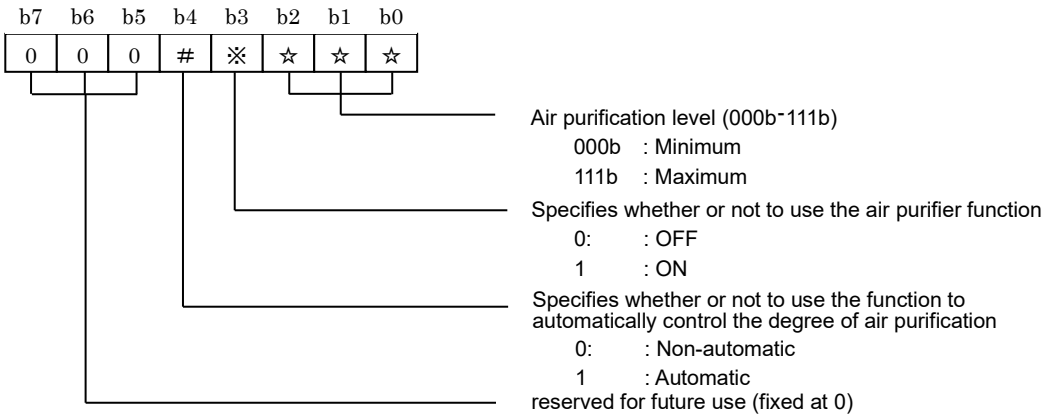


This property shall be effective even when the value of the "operation status" property (0x80) is OFF (0x31).



© 2000 - 2023 ECHONET Consortium

(32) Mounted air refresh method

This property indicates, in bitmap format, the air refresher function(s) supported by the air conditioner. A value of “0” for Bit 0 or Bit 1 shall mean that the air conditioner is not equipped with a minus ion-based or cluster ion-based air refresher function, respectively, and a value of “1” for Bit 0 or Bit 1 shall mean that the air conditioner is equipped with a minus ion-based or cluster ion-based air refresher function, respectively.

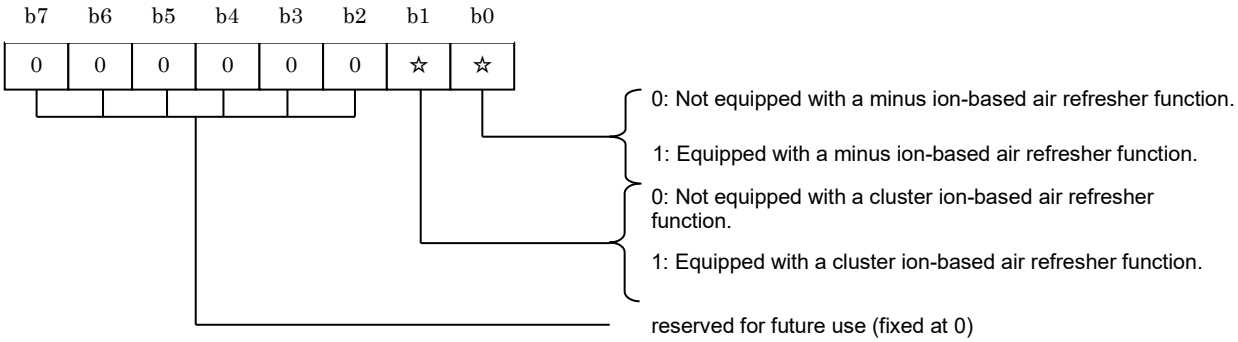


This property shall be effective even when the value of the “operation status” property (0x80) is OFF (0x31).

(33) Air refresher function setting

An 8-element array is used to specify, for each type of air refresher function, whether or not to use the air refresher function, whether or not to use the function to automatically control the degree of air refreshing, the degree of air refreshing to achieve with the air refresher function when the function to automatically control the degree of air refreshing is not used, and to acquire the current settings.

Each element of the array is used for a different type of air refresher function:

Element 0: Negative ion type
Element 1: Cluster ion type
Elements 2 to 7: Reserved for future use.

The size of each element is 1 byte. Bits 0 through 2 are used to specify the degree of air refreshing to achieve with the air refresher function by selecting a level from the 8 predefined levels (000b to 111b). The degree of air refreshing for the 8 levels may be defined freely, as long as 000b and 111b are used for the lowest and highest levels, respectively. Bit 3 specifies whether or not to use the air refresher function (“OFF” when the value of Bit 3 is “0” and “ON” when the value of Bit 3 is “1”). Bit 4 specifies whether or not to use the function to automatically control the degree of air refreshing for the air refresher function (“non-automatic” when the value of Bit 4 is “0” and “automatic” when the value of Bit 4 is “1”). When the value of Bit 4 is “1” (automatic), the degree



© 2000 - 2023 ECHONET Consortium

of air refreshing specified by Bits 0 through 2 becomes ineffective. The figure below illustrates the composition of an element.

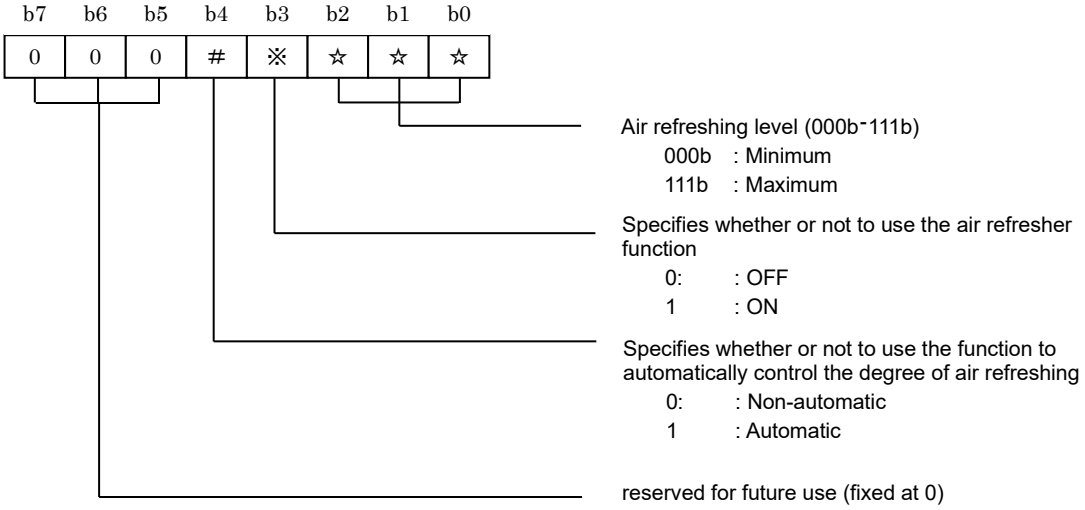


This property shall be effective even when the value of the “operation status” property (0x80) is OFF (0x31).

(34) Mounted self-cleaning method

This property indicates, in bitmap format, the self-cleaning function(s) supported by the air conditioner. A value of “0” for Bit 0 or Bit 1 shall mean that the air conditioner is not equipped with an ozone-based or drying-based self-cleaning function, respectively, and a value of “1” for Bit 0 or Bit 1 shall mean that the air conditioner is equipped with an ozone-based or drying-based self-cleaning function, respectively.

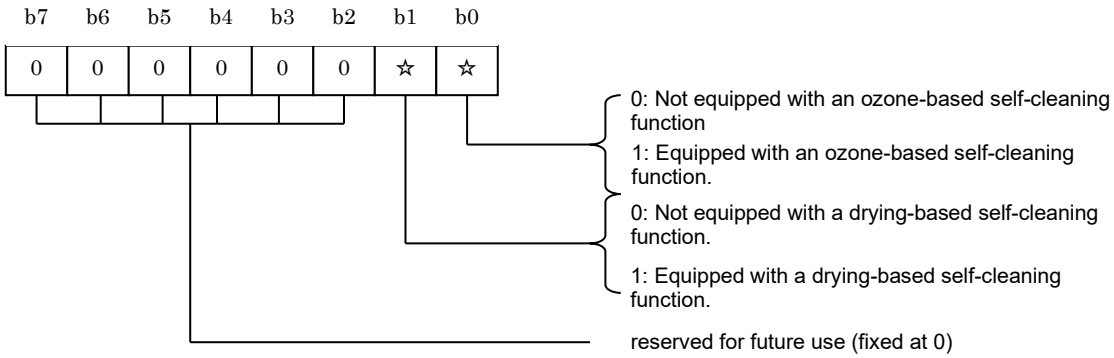


This property shall be effective even when the value of the “operation status” property (0x80) is OFF (0x31).

(35) Self-cleaning function setting



© 2000 - 2023 ECHONET Consortium

An 8-element array is used to specify, for each type of self-cleaning function, whether or not to use the self-cleaning function, whether or not to use the function to automatically control the degree of self-cleaning, the degree of self-cleaning to achieve with the self-cleaning function when the function to automatically control the degree of self-cleaning is not used, and to acquire the current settings.

Each element of the array is used for a different type of self-cleaning function:

Element 0: Ozone-type

Element 1: Drying-type

Elements 2 to 7: Reserved for future use.

The size of each element is 1 byte. Bits 0 through 2 are used to specify the degree of self-cleaning to achieve with the self-cleaning function by selecting a level from the 8 predefined levels (000b to 111b). The degree of self-cleaning for the 8 levels may be defined freely, as long as 000b and 111b are used for the lowest and highest levels, respectively. Bit 3 specifies whether or not to use the self-cleaning function ("OFF" when the value of Bit 3 is "0" and "ON" when the value of Bit 3 is "1"). Bit 4 specifies whether or not to use the function to automatically control the degree of self-cleaning for the self-cleaning function ("non-automatic" when the value of Bit 4 is "0" and "automatic" when the value of Bit 4 is "1"). When the value of Bit 4 is "1" (automatic), the degree of self-cleaning specified by Bits 0 through 2 becomes ineffective. The figure below illustrates the composition of an element.

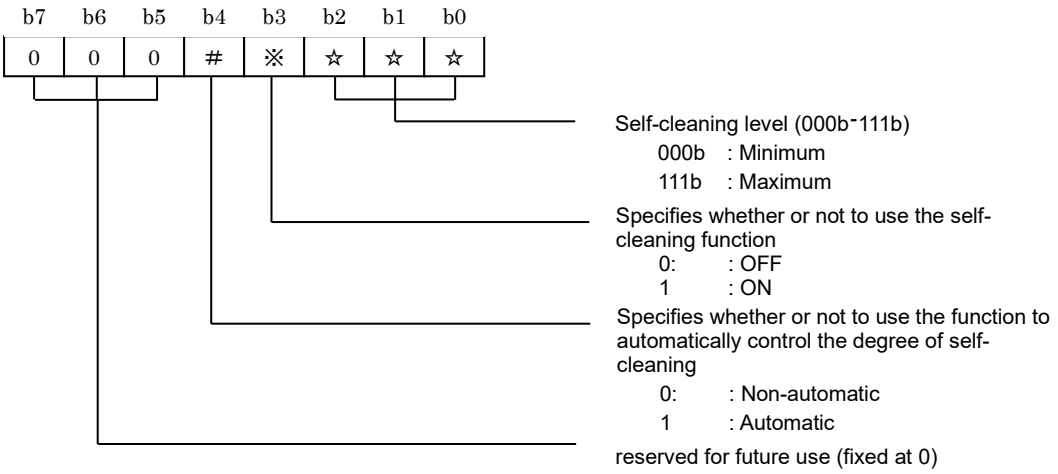


This property shall be effective even when the value of the "operation status" property (0x80) is OFF (0x31).

(36) Special function setting

Used to specify the "special function" to use in the mode specified by the "operation mode setting"



© 2000 - 2023 ECHONET Consortium

property (0xB0), and to acquire the current setting. 0x41, 0x42, 0x43 and 0x44 shall be used for the clothes dryer function, condensation suppressor function, mite and mold control function and active defrosting function, respectively. When none of the 4 special functions are specified, 0x40 shall be used. 0x45 and succeeding values shall be reserved for future use.
In cases where any one of the special functions is designed in such a way that setting the value for that function in the "'special function' setting" property necessitates an "operation mode setting" property (0xB0) value change to ensure consistency between the content of the "operation mode setting" property and the content of the "'special function' setting" property, a means shall be provided to automatically make any required change to the content of the "operation mode setting" property. For instance, if the clothes dryer function is designed to only operate in the "heating" mode, the "operation mode setting" property value must be changed to the value for the "heating" mode whenever the clothes dryer function is specified and the "operation mode setting" property value is that for a function other than the "heating" mode. However, the relationship between the two properties shall be implementation-dependent and is not specified in this ECHONET Specification.
It is only required to implement the property values that correspond to the functions provided by the actual piece of equipment in which this class is implemented.
This property shall be effective even when the value of the "operation status" property (0x80) is OFF (0x31).

(37) Operation status of components

This property indicates the operation status of the air conditioner components in bitmap format.

Bit 0: Operation status of the compressor:
0: Not operating
1: In operation

Bit 1: Operation status of the thermostat:
0: Thermostat OFF
1: Thermostat ON

Bits 2 to 7: Reserved for future use.

The "thermostat OFF" state shall mean a state in which "the air conditioner is in operation but the target temperature has been achieved (i.e. the difference between the room temperature and the room temperature setting is less than the specified value) and no heat exchange is being made."
The "thermostat ON" state shall mean a state in which "the difference between the room temperature and the room temperature setting is equal to or more than the specified value and heat exchange is being made to achieve the target temperature."



© 2000 - 2023 ECHONET Consortium

This property shall be effective even when the value of the “operation status” property (0x80) is OFF (0x31).

(38) Thermostat setting override function

Used to specify whether or not the household air conditioner shall operate ignoring its thermostat setting.

Normal setting = 0x40, thermostat setting override function ON = 0x41, thermostat setting override function OFF = 0x42

The “normal setting” mode is a mode in which the air conditioner is dynamically and automatically switched from the “thermostat ON” state to the “thermostat OFF” state or from the “thermostat OFF” state to the “thermostat ON” state as appropriate depending on the room and outdoor temperatures (The air conditioner remains in operation even after it is switched to the “thermostat OFF” state). The “thermostat setting override function ON” mode is a mode in which the air conditioner continues performing heat exchange ignoring the temperature setting and the “thermostat setting override function OFF” mode is a mode in which the air conditioner performs no heat exchange regardless of the temperature setting.

This property shall be effective even when the value of the “operation status” property (0x80) is OFF (0x31).

(39) Air purification mode setting

Used to turn on (0x41)/ off (0x42) the air purification function mode of the household air conditioner, and to acquire the current setting.

This property shall be effective even when the value of the “Operation status” property (0x80) is OFF (0x31).

(40) Buzzer

A buzzer sound is generated by setting 0x41 for this property for home air conditioners.

If generating a buzzer sound in conjunction with setting other property values, a control request message is sent by storing this property on the same message. In addition, a control request message for this property may be sent before or after transmission of control request messages for a different property value setting by a separate message. It is desired for a write request for this property to be transmitted within a period that the buzzer can be recognized as indicating the operation execution of the different property value setting.

If setting only the generation of the buzzer sound, transmit a control request message for only this property.

As the operation of the device associated with the property value setting, the timing at which the buzzer is generated, the concrete type of buzzer sound, and the continuation period are dependent on the device, there are no specific provisions for these items.



© 2000 - 2023 ECHONET Consortium

(41) ON timer-based reservation setting

Used to specify whether or not to use the ON timer (time-based reservation function, relative time-based reservation function or both), and to acquire the current setting. This property is used in combination with the “ON timer setting (time)” or “ON timer setting (relative time)” property.
Both the time- and relative time-based reservation functions are ON = 0x41, both reservation functions are OFF = 0x42, time-based reservation function is ON = 0x43, relative time-based reservation function is ON = 0x44
This property shall be effective even when the value of the “operation status” property (0x80) is OFF (0x31).

(42) ON timer setting (time)

When the “‘ON timer-based reservation’ setting” property value is a value for using the time-based reservation function, this property is used to specify the time when the air conditioner will be turned on in the “hour (0x00 to 0x17 (0 to 23)) : minute (0x00 to 0x3B (0 to 59))” format, and to acquire the current setting. The higher- and lower-order bytes shall be used for the “hour” and “minute” values, respectively.
This property shall be effective even when the value of the “operation status” property (0x80) is OFF (0x31).

(43) ON timer setting (relative time)

When the “‘ON timer-based reservation’ setting” property value is a value for using the relative time-based reservation function, this property is used to specify the time when the air conditioner will be turned on, in terms of a relative time relative to the current time, and to acquire the current setting. The “hour (0x00 to 0xFF (0 to 255)) : minute (0x00 to 0x3B (0 to 59))” format shall be used, with the higher- and lower-order bytes used for the “hour” and “minute” values, respectively.
This property shall be effective even when the value of the “operation status” property (0x80) is OFF (0x31).

(44) OFF timer-based reservation setting

Used to specify whether or not to use the OFF timer (time-based reservation function, relative time-based reservation function or both), and to acquire the current setting. This property is used in combination with the “OFF timer setting (time)” or “OFF timer setting (relative time)” property.
Both the time- and relative time-based reservation functions are ON = 0x41, both reservation functions are OFF = 0x42, time-based reservation function is ON = 0x43, relative time-based reservation function is ON = 0x44



© 2000 - 2023 ECHONET Consortium

This property shall be effective even when the value of the “operation status” property (0x80) is OFF (0x31).

(45) OFF timer setting (time)

When the “‘OFF timer-based reservation’ setting” property value is a value for using the time-based reservation function, this property is used to specify the time when the air conditioner will be turned off in the “hour (0x00 to 0x17 (0 to 23)) : minute (0x00 to 0x3B (0 to 59))” format, and to acquire the current setting. The higher- and lower-order bytes shall be used for the “hour” and “minute” values, respectively.

This property shall be effective even when the value of the “operation status” property (0x80) is OFF (0x31).

(46) OFF timer setting (relative time)

When the “‘OFF timer-based reservation’ setting” property value is a value for using the relative time-based reservation function, this property is used to specify the time when the air conditioner will be turned off, in terms of a relative time relative to the current time, and to acquire the current setting. The “hour (0x00 to 0xFF (0 to 255)) : minute (0x00 to 0x3B (0 to 59))” format shall be used, with the higher- and lower-order bytes used for the “hour” and “minute” values, respectively.

This property shall be effective even when the value of the “operation status” property (0x80) is OFF (0x31).



© 2000 - 2023 ECHONET Consortium

## 3．2．2 Requirements for ventilation fan class

Class group code : 0x01

Class code : 0x33

Instance code : 0x01–0x7F (0x00: All-instance specification code)

| Property name | EPC | Contents of property | Data type | Data size | Unit | Access rule | Man-datory | Announcement at status change | Remark |
|---|---|---|---|---|---|---|---|---|---|
| | | Value range (decimal notation) | | | | | | | |
| Operation status | 0x80 | This property indicates the ON/OFF status. | unsigned char | 1 byte | — | Set | ○ | ○ | |
| | | ON=0x30, OFF=0x31 | | | | Get | ○ | | |
| Ventilation automatic setting | 0xBF | Automatic/Non-automatic | unsigned char | 1 byte | – | Set/Get | | | |
| | | Automatic = 0x41, Non-automatic = 0x42 | | | | | | | |
| Set value of ventilation air flow rate | 0xA0 | Sets a level of ventilation air flow rate or ventilation air flow rate automatic mode. This property specifies ventilation air flow rate level with 8-steps. | unsigned char | 1 byte | – | Set/Get | | | |
| | | Ventilation air flow rate automatic mode<br>= 0x41<br>Ventilation air flow rate level<br>= 0x31–0x38 | | | | | | | |

Note: In the “Announcement at status change” column, ○ denotes mandatory processing when the property is implemented.

(1) Operation status (inherited from the device object super class property)

This property indicates the operation/stop status of the ventilation fan. The property value of 0x30/0x31 shall be associated with both operation and stop.

(2) Ventilation automatic setting

Sets either Automatic or Non-automatic for the automatic ventilating operation.

Automatic = 0x41, Non-automatic = 0x42

(3) Set value of ventilation air flow rate

This property indicates the level of ventilation air flow rate or the ventilation air flow rate automatic mode. The property value of the ventilation air flow rate automatic mode shall be 0x41. The air flow rate level shall be set with 8-steps and take a property value of 0x31 to 0x38. The values for the 8 levels may be defined freely, as long as 0x31 and 0x38 are used for the minimum and maximum air flow rates, respectively.



© 2000 - 2023 ECHONET Consortium

## 3．2．3 Requirements for air conditioner ventilation fan class

Class group code : 0x01

Class code : 0x34

Instance code : 0x01–0x7F (0x00: All-instance specification code)

| Property name | EPC | Contents of property | Data type | Data size | Unit | Access rule | Man-datory | Announcement at status change | Remark |
|---|---|---|---|---|---|---|---|---|---|
| | | Value range (decimal notation) | | | | | | | |
| Operation status | 0x80 | This property indicates the ON/OFF status. | unsigned char | 1 byte | — | Set | ○ | ○ | |
| | | ON=0x30, OFF=0x31 | | | | Get | ○ | | |
| Set value of room relative humidity | 0xB4 | Set value of relative humidity at automatic ventilating operation. | unsigned char | 1 byte | % | Set/Get | | | |
| | | 0x00–0x64, (0–100%) | | | | | | | |
| Ventilation automatic setting | 0xBF | Automatic/Non-automatic | unsigned char | 1 byte | – | Set/Get | | | |
| | | Automatic = 0x41, Non-automatic = 0x42 | | | | | | | |
| Measured value of room relative humidity | 0xBA | Measured value of room relative humidity | unsigned char | 1 byte | % | Get | | | |
| | | 0x00–0x64 (0–100%) | | | | | | | |
| Set value of ventilation air flow rate | 0xA0 | Sets a level of ventilation air flow rate or ventilation air flow rate automatic mode. This property specifies ventilation air flow rate level (8-step). | unsigned char | 1 byte | – | Set/Get | | | |
| | | Ventilation air flow rate automatic mode<br>= 0x41<br>Ventilation air flow rate level<br>= 0x31–0x38 | | | | | | | |
| Heat exchanger operation setting | 0xE0 | This property indicates ON/OFF status of heat exchanger. | unsigned char | 1 byte | – | Set/Get | | | |
| | | Heat exchanger ON = 0x41, OFF=0x42 | | | | | | | |
| Measured value of $CO_2$ concentration | 0xC0 | This property indicates measured value of $CO_2$ concentration in ppm. | unsigned short | 2 bytes | ppm | Get | | | |
| | | 0x0000–0xFFFD (0–65533 ppm) | | | | | | | |
| Smoke (cigarette) detection status | 0xC1 | This property indicates smoke (cigarette) detection status. | unsigned char | 1 byte | – | Get | | | |
| | | Smoke (cigarette) detection status found = 0x41<br>Smoke (cigarette) detection status not found = 0x42 | | | | | | | |
| Pollution detection status | 0xC2 | This property indicates pollution detection status | unsigned char | 1 byte | – | Get | | | |
| | | Pollution detected = 0x41<br>Pollution non-detected = 0x42 | | | | | | | |
| Ventilation mode automatic setting | 0xB0 | Automatic/Non-automatic | unsigned char | 1 byte | — | Set/ Get | | | |
| | | Automatic=0x41, Non-automatic=0x42 | | | | | | | |



© 2000 - 2023 ECHONET Consortium

| | | | | | | | | | |
|---|---|---|---|---|---|---|---|---|---|
| Ventilation method setting | 0xB1 | Used to set blowing (normal / heat exchange) ventilation / air conditioning ventilation setting and to acquire the setting status.<br>Blowing ventilation = 0x41, air conditioning ventilation = 0x42 | unsigned char | 1 byte | — | Set/ Get | | | |
| Ventilation mode setting | 0xB2 | Used to set the normal ventilation / heat exchange ventilation / cooling ventilation / heating ventilation / dehumidifying ventilation / humidifying ventilation / and other ventilation modes and acquire the setting status.<br>The following codes shall be sequentially assigned.<br>0x41/0x42/0x43/0x44/0x45/0x46/0x40 | unsigned char | 1 byte | — | Set/ Get | | ○ | |
| Cooling / heating high-low settings | 0xB3 | Used to set cooling / heating high-low setting level.<br>Specifies cooling / heating high-low setting level in 8 steps.<br>Cooling / heating high-low setting level=0x31—0x38 | unsigned char | 1 byte | — | Set/ Get | | | |
| Measured value of outdoor air temperature | 0xBE | This property indicates the measured value of outdoor air temperature in units of 0.1°C.<br>0x81–0x7D (-127–125°C) | signed char | 1 byte e | °C | Get | | | |
| Measured value of outdoor air relative humidity | 0xCA | This property indicates measured value of outdoor air relative humidity in 1%.<br>0x00–0x64 (0–100%) | unsigned char | 1 byte | % | Get | | | |
| Measured value of return air temperature | 0xD0 | This property indicates the measured value of return air temperature in units of 1°C.<br>0x81–0x7D (-127–125°C) | signed char | 10 bytes | °C | Get | | | |
| Measured value of return air humidity | 0xD1 | This property indicates measured value of return air relative humidity in 1%.<br>0x00–0x64 (0–100%) | unsigned char | 10 bytes | % | Get | | | |
| Measured value of supply air temperature | 0xD2 | This property indicates the measured value of supply air temperature in units of 1°C.<br>0x81–0x7D (-127–125°C) | signed char | 1 byte | °C | Get | | | |
| Measured value of supply air relative humidity | 0xD3 | This property indicates measured value of supply air relative humidity in units of 1%.<br>0x00–0x64 (0–100%) | unsigned char | 1 byte | % | Get | | | |
| Measured value of exhaust air temperature | 0xD4 | This property indicates the measured value of exhaust air temperature in units of 0.1°C.<br>0x81–0x7D (-127–125°C) | signed char | 1 byte | °C | Get | | | |



© 2000 - 2023 ECHONET Consortium

| | | | | | | | | | |
|---|---|---|---|---|---|---|---|---|---|
| Measured value of exhaust air relative humidity | 0xD5 | This property indicates measured value of exhaust air relative humidity in units of 1%.<br>0x00–0x64 (0–100%) | unsigned char | 1 byte | % | Get | | | |
| Measured value of electric current consumption | 0xB9 | This property indicates the measured value of electric current consumption in units of 0.1A.<br>0x0000–0xFFFD (0–6553.3A) | unsigned short | 1 byte | 0.1A | Get | | | |

Note: In the “Announcement at status change” column, ○ denotes mandatory processing when the property is implemented.

(1) Operation status (inherited from the device object super class property)

This property indicates the operation/stop status of the air conditioner. The property value of 0x30/0x31 shall be associated with both operation and stop.

(2) Set value of room relative humidity

Sets the set value of room relative humidity in the automatic ventilating operation in %. If the measured value of room relative humidity exceeds the set value of room relative humidity when the “ventilation automatic setting” is set to Automatic, the “operation status” switches to ON. The property value range shall be 0x00 to 0x64 (0 to 100%). When the property value of the actual device exceeds the property value range, the overflow code 0xFF shall be used. When the property value falls below the property value range, the underflow code 0xFE shall be used.

(3) Ventilation automatic setting

Sets either Automatic or Non-automatic for the automatic ventilating operation.

Automatic = 0x41, Non-automatic = 0x42

(4) Measured value of room relative humidity

Sets the measured value of room relative humidity in %. The property value range shall be 0x00 to 0x64 (0 to 100%). When the property value of the actual device is higher than the property value range, the overflow code 0xFF shall be used. When the property value is lower than the property value range, the underflow code 0xFE shall be used.

If the measured value cannot be sent, 0xFD shall be used.

(5) Set value of ventilation air flow rate

This property indicates the level of ventilation air flow rate or the ventilation air flow rate automatic mode. The property value of the ventilation air flow rate automatic mode shall be 0x41. The air flow rate level shall be set (8-step) and take a property value of 0x31 to 0x38. The values for the 8 levels may be defined freely, as long as 0x31 and 0x38 are used for the



© 2000 - 2023 ECHONET Consortium

minimum and maximum air flow rates, respectively.

(6) Heat exchange operation setting

Sets ON/OFF as the operation status of the heat exchange function.

Heat exchange function ON = 0x41, OFF = 0x42

(7) Measured value of $CO_2$ concentration

This property indicates the measured value of $CO_2$ concentration in ppm. The property value range shall be 0x0000 to 0xFFFD (0 to 65533 ppm). When the property value of the actual device is higher than the property value range, the overflow code 0xFFFF shall be used. When the property value is lower than the property value range, the underflow code 0xFFFE shall be used.

(8) Smoke (cigarette) detection status

This property indicates whether a smoke (cigarette) detection status is found or not. “Smoke (cigarette) detection status found” shall be 0x41 and “Smoke (cigarette) detection status not found” shall be 0x42.

(9) Ventilation mode automatic setting

Sets automatic operation Automatic/Non-automatic of air conditioner ventilation fans (Automatic = 0x41, Non-automatic = 0x42). When Automatic = 0x41, automatic operation shall be active. Relationships between other properties when the mode is set to Automatic are shown below.

When blowing (normal or heat exchange) ventilation (0x41) is designated for the ventilation method setting (EPC = 0xB1), it shall be specified by ventilation mode setting (EPC = 0xB2) through the measured value of outdoor air temperature (EPC = 0xBE) and measured value of outdoor air relative humidity (EPC = 0xCA). Select the one of either normal ventilation (0x41) or heat exchange ventilation (0x42) ventilation mode to start operation.

When air conditioning ventilation (0x42) is designated for the ventilation method setting (EPC = 0xB1), either the ventilation mode from normal ventilation (0x41)/heat exchange ventilation (0x42)/cooling ventilation (0x43)/heating ventilation (0x44)/dehumidifying ventilation (0x45)/humidifying ventilation (0x46)/other ventilation (0x40) which are specified in the ventilation mode setting (EPC = 0xB2), through the measured value of outdoor air temperature (EPC = 0xBE), measured value of outdoor air humidity (EPC = 0xBF), measured value of return air temperature (EPC = 0xD0), or measured value of return air relative humidity (EPC = 0xD1) shall be selected to start operation.

When Non-automatic = 0x42, automatic operation shall be inactive. Relationships between other properties when the mode is set to Non-automatic are shown below.

Either one of the designated ventilation mode from normal ventilation (0x41)/heat exchange ventilation (0x42)/cooling ventilation (0x43)/heating ventilation (0x44)/dehumidifying



© 2000 - 2023 ECHONET Consortium

ventilation (0x45)/humidifying ventilation (0x46)/other ventilation (0x40) which are specified in the ventilation mode setting (EPC = 0xB2) shall be selected to start operation.

When normal ventilation (0x41) / heat exchange ventilation (0x42) are designated, the ventilation method setting (EPC = 0xB1) shall be set to blowing (normal or heat exchange) ventilation (0x41). When cooling ventilation (0x43) / heating ventilation (0x44) / dehumidifying ventilation (0x45) / humidifying ventilation (0x46) / other ventilation (0x40) are designated, ventilation method setting (EPC = 0xB1) shall be set to air conditioning ventilation (0x42).

(10) Ventilation method setting

Used to set the ventilation method setting and acquire the setting information.

blowing ventilation = 0x41, air conditioning ventilation = 0x42

blowing ventilation: normal ventilation/heat exchange ventilation

air conditioning ventilation: cooling ventilation/heating ventilation/dehumidifying ventilation/humidifying ventilation/other ventilation

When the ventilation mode automatic setting is set to Non-automatic, the status of this property will not change, even if a write request for the ventilation method setting (EPC = 0xB1) is sent.

(11) Ventilation mode setting

Used to set the normal ventilation / heat exchanger ventilation / cooling ventilation / heating ventilation / dehumidifying ventilation / humidifying ventilation / and other ventilation of the air conditioning ventilation fans and acquire the setting status. “Other ventilation” modes are those not corresponding to any of the other operating modes. Property values 0x41/0x42/0x43/0x44/0x45/0x46/0x40 correspond to each of these operating modes in that order.

(12) Cooling/heating high-low settings

Specifies cooling/heating high-low level in 8 steps and set to 0x31 as the minimum and 0x38 as maximum values. Specific values of each level are not specified. This property varies according to user operations.

(13) Measured value of outdoor air temperature

This property indicates the measured value of outdoor air temperature in units of °C. The property value range shall be 0x81 to 0x7D (-127 to 125°C). When the property value of the actual device exceeds this property value range, the overflow code 0x7F shall be used. When said value falls below the property value range, the underflow code 0x80 shall be used. If the measured value cannot be sent, 0x7E shall be used.

(14) Measured value of outdoor air relative humidity



© 2000 - 2023 ECHONET Consortium

This property indicates the measured value of outdoor air relative humidity in units of %. The property value range shall be 0x00 to 0x64 (0 to 100%). When the property value of the actual device exceeds this property value range, the overflow code 0xFF shall be used. When said value falls below the property value range, the underflow code 0xFE shall be used. If the measured value cannot be sent, 0xFD shall be used.

(15) Measured value of return air temperature

This property indicates the measured value of return air temperature in units of °C. The property value range shall be 0x81 to 0x7D (-127 to 125°C). When the property value of the actual device exceeds this property value range, the overflow code 0x7F shall be used. When said value falls below the property value range, the underflow code 0x80 shall be used. If the measured value cannot be sent, 0x7E shall be used.

Since this property can measure up to 10 locations, the data size shall be fixed to 10 bytes. The 10-byte data allocation shall be left justified.

Examples of measuring five locations:

| 1st byte | 2nd byte | 3rd byte | 4th byte | 5th Byte | 6th byte | 7th byte | 8th byte | 9th byte | 10th byte |
|---|---|---|---|---|---|---|---|---|---|
| 0x81—0x7D | 0x81—0x7D | 0x81—0x7D | 0x81—0x7D | 0x81—0x7D | 0x7E | 0x7E | 0x7E | 0x7E | 0x7E |

(16) Measured value of return air relative humidity

This property indicates the measured value of return air relative humidity in units of %. The property value range shall be 0x00 to 0x64 (0 to 100%). When the property value of the actual device exceeds this property value range, the overflow code 0xFF shall be used. When said value falls below the property value range, the underflow code 0xFE shall be used. If the measured value cannot be sent, 0xFD shall be used.

Since this property can measure up to 10 locations, the data size shall be fixed to 10 bytes. The 10-byte data allocation shall be left justified.

Examples of measuring five locations:

| 1st byte | 2nd byte | 3rd byte | 4th byte | 5th Byte | 6th byte | 7th byte | 8th byte | 9th byte | 10th byte |
|---|---|---|---|---|---|---|---|---|---|
| 0x00—0x64 | 0x00—0x64 | 0x00—0x64 | 0x00—0x64 | 0x00—0x64 | 0xFD | 0xFD | 0xFD | 0xFD | 0xFD |

(17) Measured value of supply air temperature

This property indicates the measured value of supply air temperature in units of °C. The property value range shall be 0x81 to 0x7D (-127 to 125°C). When the property value of the actual device exceeds this property value range, the overflow code 0x7F shall be used. When said value falls below the property value range, the underflow code 0x80 shall be used. If the measured value cannot be sent, 0x7E shall be used.



© 2000 - 2023 ECHONET Consortium

(18) Measured value of supply air relative humidity

This property indicates the measured value of relative humidity in units of %. The property value range shall be 0x00 to 0x64 (0 to 100%). When the property value of the actual device exceeds this property value range, the overflow code 0xFF shall be used. When said value falls below the property value range, the underflow code 0xFE shall be used. If the measured value cannot be sent, 0xFD shall be used.

(19) Measured value of exhaust air temperature

This property indicates the measured value of exhaust air temperature in units of °C. The property value range shall be 0x81 to 0x7D (-127 to 125℃). When the property value of the actual device exceeds this property value range, the overflow code 0x7F shall be used. When said value falls below the property value range, the underflow code 0x80 shall be used. If the measured value cannot be sent, 0x7E shall be used.

(20) Measured value of exhaust air relative humidity

This property indicates the measured value of exhaust air relative humidity in units of %. The property value range shall be 0x00 to 0x64 (0 to 100%). When the property value of the actual device exceeds this property value range, the overflow code 0xFF shall be used. When said value falls below the property value range, the underflow code 0xFE shall be used. If the measured value cannot be sent, 0xFD shall be used.

(21) Measured value of electric current consumption

This property indicates the current consumption of air conditioner ventilation fan in units of 0.1A. When the measured electric current is alternating current, the effective value shall be indicated. The property value range shall be 0x0000 to 0xFFFD (0 to 6553.3A). When the property value of the actual piece of equipment is higher than the upper limit of the property value range, the overflow code 0xFFFF shall be used. When the property value is lower than the lower limit of the property value range, the underflow code 0xFFFE shall be used.



© 2000 - 2023 ECHONET Consortium

## 3．2．4 Requirements for air cleaner class

Class group code : 0x01

Class code : 0x35

Instance code : 0x01–0x7F (0x00: All-instance specification code)

| Property name | EPC | Contents of property | Data type | Data size | Unit | Access rule | Man-datory | Announcement at status change | Remark |
|---|---|---|---|---|---|---|---|---|---|
| | | Value range (decimal notation) | | | | | | | |
| Operation status | 0x80 | This property indicates the ON/OFF status. | unsigned char | 1 byte | — | Set | ○ | ○ | |
| | | ON=0x30, OFF=0x31 | | | | Get | ○ | | |
| Filter change notice | 0xE1 | Filter change time notice found/not found | unsigned char | 1 byte | – | Get | | | |
| | | Found = 0x41, Not found = 0x42 | | | | | | | |
| Air flow rate setting | 0xA0 | Sets a level of ventilation air flow rate or ventilation air flow rate automatic mode. The ventilation air flow rate is specified with 8-steps. | unsigned char | 1 byte | – | Set/Get | | | |
| | | Ventilation air flow rate automatic mode<br>= 0x41<br>Ventilation air flow rate level<br>= 0x31–0x38 | | | | | | | |
| Smoke (cigarette) detection status | 0xC1 | This property indicates smoke (cigarette) detection status. | unsigned char | 1 byte | – | Get | | | |
| | | Smoke (cigarette) detection status found = 0x41<br>Smoke (cigarette) detection status not found = 0x42 | | | | | | | |
| Optical catalyst operation setting | 0xC2 | Optical catalyst ON/OFF status | unsigned char | 1 byte | – | Set/Get | | | |
| | | Optical catalyst ON = 0x41<br>Optical catalyst OFF = 0x42 | | | | | | | |
| Air pollution detection status | 0xC0 | This property indicates air pollution detection status | unsigned char | 1 byte | – | Get | | | |
| | | Air pollution detected = 0x41<br>Air pollution non-detected = 0x42 | | | | | | | |

Note: In the “Announcement at status change” column, ○ denotes mandatory processing when the property is implemented.

(1) Operation status (inherited from the device object super class property)

This property indicates the operation/stop status of the air cleaner. The property value of 0x30/0x31 shall be associated with both operation and stop.

(2) Filter change notice

This property indicates whether notification of filter change is to be made or not. This property shall disclose that the time has come to change the air cleaner filter.

The transition from “Filter change time notice found” to “Filter change time notice not found”



© 2000 - 2023 ECHONET Consortium

shall be achievable using the reset switch on the air cleaner body, etc. Found = 0x41, not found = 0x42

(3) Air flow rate setting

This property indicates the level of ventilation air flow rate or the ventilation air flow rate automatic mode. The property value of the ventilation air flow rate automatic mode shall be 0x41. The ventilation air flow rate level shall be set with 8-steps and take a property value of 0x31 to 0x38. The values for the 8 levels may be defined freely, as long as 0x31 and 0x38 are used for the minimum and maximum air flow rates, respectively.

(4) Smoke (cigarette) detection status

This property indicates whether smoke (cigarette) detection status is found or not. “Smoke (cigarette) detection status found” = 0x41 and “Smoke (cigarette) detection status not found” = 0x42 shall be specified.

(5) Optical catalyst operation setting

This property indicates the operation status of the optical catalyst function as ON/OFF. “Optical catalyst ON” = 0x41 and “Optical catalyst OFF” = 0x42 shall be specified.

(6) Air pollution detection status

This property indicates air pollution detection status. Air pollution detected = 0x41 and Air pollution non-detected = 0x42 shall be specified.



© 2000 - 2023 ECHONET Consortium

## 3．2．5 Requirements for humidifier class

Class group code : 0x01

Class code : 0x39

Instance code : 0x01–0x7F (0x00: All-instance specification code)

| Property name | EPC | Contents of property | Data type | Data size | Unit | Access rule | Man-datory | Announcement at status change | Remark |
|---|---|---|---|---|---|---|---|---|---|
| | | Value range (decimal notation) | | | | | | | |
| Operation status | 0x80 | This property indicates the ON/OFF status. | unsigned char | 1 byte | — | Set | ○ | ○ | |
| | | ON=0x30, OFF=0x31 | | | | Get | ○ | | |
| Humidifying setting 1 | 0xC0 | Sets value of relative humidity and get setting status | unsigned char | 1 byte | | Set/Get | ○ | | Note1 |
| | | 0x00–0x64, (0–100%)<br>Automatic setting =0x70,<br>Continuous operation =0x71,<br>intermittent operation =0x72 | | | | | | | |
| Humidifying setting 2 | 0xC1 | Sets humidifying level by 3 steps | unsigned char | 1 byte | | Set/Get | ○ | | Note1 |
| | | Humidifying levels =0x31–0x33<br>Automatic setting =0x70,<br>Continuous operation =0x71,<br>intermittent operation =0x72 | | | | | | | |
| Measured value of relative humidity | 0xB4 | This property indicates measured value of relative humidity | unsigned char | 1 byte | – | Get | | | |
| | | 0x00–0x64, (0–100%) | | | | | | | |
| Reservation set of OFF timer | 0x94 | Sets reservation ON/OFF and set setting status | unsigned char | 1 byte | | Set/Get | | | |
| | | Reservation ON =0x41, OFF =0x42 | | | | | | | |
| Relative time value set of OFF timer | 0x96 | Sets timer value HH:MM and get updated time | unsigned char × 2 | 2 bytes | | Set/Get | | | |
| | | 0-0x17: 0-0x3B<br>(=0-23): (=0-59) | | | | | | | |
| Ion emission setting | 0xC2 | Sets ON/OFF of ion emission and gets setting status | unsigned char | 1 byte | – | Set/Get | | | |
| | | Emission ON= 0x41, OFF=0x42 | | | | | | | |
| Implemented ion emission method | 0xC3 | Sets ion emission method equipped in humidifier by bit map | unsigned char | 1 byte | – | Get | | | |
| | | Bit 0: negative ion method,<br>Bit 1: cluster ion method, | | | | | | | |
| Special operation mode setting | 0xC4 | Sets special operation mode and gets setting status.<br>Specifies by bit map | unsigned short | 1 byte | | Set/Get | | | |
| | | Specifies 1 for effective setting<br>Bit 0: Throat dry prevention<br>Bit 1: Quiet operation<br>Bit 2–7: reserved for future use | | | | | | | |
| Water amount level | 0xC5 | This property indicates water amount level in water tank by 6 steps. | unsigned char | 1 byte | – | Get | | | |
| | | 0x40: empty<br>0x41–0x45: minimum to maximum level | | | | | | | |



© 2000 - 2023 ECHONET Consortium

Note: In the “Announcement at status change” column, ○ denotes mandatory processing when the property is implemented.

Note1: Either the “humidifying setting 1” or “humidifying setting 2” property must be implemented.

(1) Operation status (inherited from super class property)

Sets operation ON/OFF of humidifier and gets operation status. Operation ON/OFF corresponds to 0x30/0x31 respectively. For humidifiers, access rule “Set” must be implemented.

(2) Humidifying setting 1

Sets relative humidity and continuous operation status and gets setting status. Relative humidity is set in the unit of % and the humidifier is operated according to the property value as a target. Furthermore, the property value when an automatic humidity detection algorithm of humidifier determines the target is 0x70, the property value of continuous operation is 0x71 and the property value of intermittent operation at a specified interval is 0x72. Detailed intermittent operation interval is not specified. Either the humidifying set 1 or the humidifying set 2 is mandatory to be implemented.

(3) Humidifying set 2

Sets humidifying level and continuous operation status, and gets setting status. Humidifying levels are decided by 3 steps and take the property values of 0x31 to 0x 33. Each value of the humidifying level is not specified. The minimum humidifying is 0x31 and the maximum humidifying is 0x33.

The property value when the target value is automatically decided by calculation algorithm for automatic humidity setting value of the humidifier is 0x70. The property value when the humidifier is operated continuously is 0x71. The property value when the humidifier is operated off and on at a specified interval is 0x72. The details of operation interval are not specified when the humidifier is operated off and on.

Either “Humidifying setting 1” or “Humidifying setting 2” is mandatorily implemented.

(4) Measured value of relative humidity

Expresses a measured value of relative humidity in unit of %. The value range of property is 0x00 to 0x64(100%). When the property value of actual equipment is over the value range of property, an overflow code 0xFF is used. When the property value is less than the value range of property, an underflow code 0xFE is used. When a measurement value cannot be returned, a code 0xFD is used.

(5) Reservation setting of OFF timer

Sets on/off of an OFF timer and gets setting status. The property is related to “Relative time value setting of OFF timer”. Reservation setting ON=0x41, reservation setting OFF=0x42.

(6) Relative time value setting of OFF timer



© 2000 - 2023 ECHONET Consortium

Sets the time when the humidifier turn to OFF and gets updated time when “Reservation setting of OFF timer” is ON. The data format is hour: 0x00-0x17 (0-23) and minute: 0x00-0x3B (0-59). The property value is taken from the upper bytes in the order of hour and minute.

(7) Ion emission setting

Sets ON/OFF of ion emitting function implemented in humidifier and gets setting status. Ion emitting ON=0x41, ion emitting OFF=0x42.

(8) Implemented ion emission method

Expresses implemented method of ion emission functions by a bit map. As realizing methods, negative ion method and cluster ion method are specified. The details are as follows. The bit 0 means that the realizing method is not implemented, and bit 1 means that the realizing method is implemented.

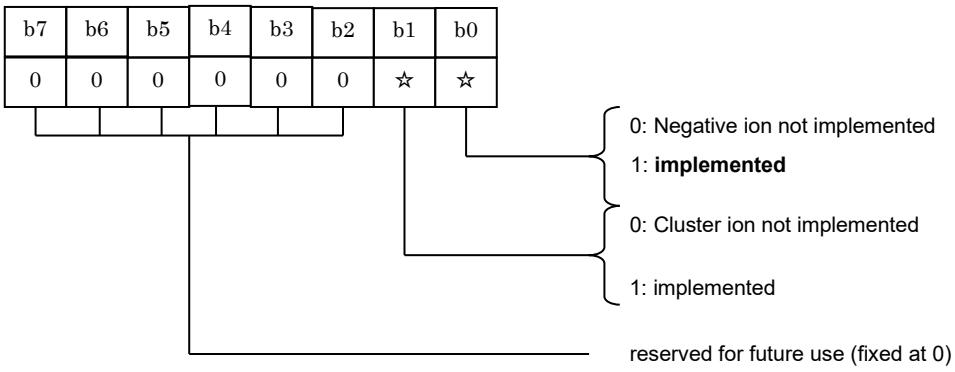


(9) Special operation mode setting

The list of whether each special operation mode setting is enabled or disabled is shown in a bitmap. The “thirst prevention setting” and the “silent operation setting” are specified as special operation mode settings. The details of each are shown below. A bit value of “0” indicates that the setting is invalid, and the value “1” indicates that the setting is valid.

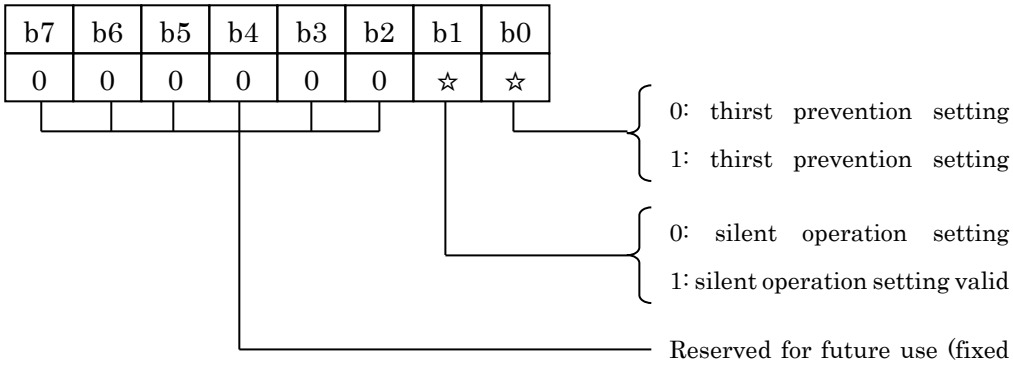




© 2000 - 2023 ECHONET Consortium

(10)Water amount level

Expresses an amount of water remained in the tank by 6 steps. Each value of level is not specified. The empty status is 0x40 and full maximum amount status is 0x45.



© 2000 - 2023 ECHONET Consortium

## 3．2．6 Requirements for electric heater class

Class group code : 0x01

Class code : 0x42

Instance code : 0x01–0x7F (0x00: All-instance specification code)

| Property name | EPC | Contents of property | Data type | Data size | Unit | Access rule | Man-datory | Announcement at status change | Remark |
|---|---|---|---|---|---|---|---|---|---|
| | | Value range (decimal notation) | | | | | | | |
| Operation status | 0x80 | This property indicates the ON/OFF status. | unsigned char | 1 byte | — | Set | | ○ | |
| | | ON=0x30, OFF=0x31 | | | | Get | ○ | | |
| Automatic temperature control setting | 0xB1 | Used to specify whether or not to use the automatic temperature control function. | unsigned char | 1 byte | – | Set/Get | | | |
| | | Automatic = 0x41, non-automatic = 0x42 | | | | | | | |
| Temperature setting | 0xB3 | Used to set the temperature. | unsigned char | 1 byte | °C | Set/Get | ○ | | |
| | | 0x00–0x32 (0–50°C) | | | | | | | |
| Measured room temperature | 0xBB | This property indicates the measured room temperature. | signed char | 1 byte | °C | Get | | | |
| | | 0x81–0x7E (-127–126°C) | | | | | | | |
| Remotely set temperature | 0xBC | This property indicates the last temperature (°C) set by the user using a remote controller unit. | unsigned char | 1 byte | °C | Get | | | |
| | | 0x00–0x32 (0–50°C) | | | | | | | |
| Air flow rate setting | 0xA0 | Used to specify the air flow rate or to specify using the function to automatically control the air flow rate. The air flow rate is selected from among the 8 predefined levels. | unsigned char | 1 byte | – | Set/Get | | | |
| | | Automatic air flow rate control used = 0x41<br>Air flow rate = 0x31 to 0x38 | | | | | | | |
| ON timer-based reservation setting | 0x90 | Used to specify whether or not to use the ON timer-based reservation function. | unsigned char | 1 byte | – | Set/Get | | | |
| | | ON timer-based reservation function ON: 0x41<br>ON timer-based reservation function OFF: 0x42 | | | | | | | |
| ON timer setting (time) | 0x91 | Used to specify the time for the ON timer-based reservation function in the HH:MM format. | unsigned char × 2 | 2 bytes | – | Set/Get | | | |
| | | 0–0x17: 0–0x3B<br>(= 0–23): (= 0–59) | | | | | | | |
| ON timer setting (relative time) | 0x92 | Used to specify the relative time for the ON timer-based reservation function in the HH:MM format | unsigned char × 2 | 2 bytes | – | Set/Get | | | |
| | | 0–0x17: 0–0x3B<br>(= 0–23): (= 0–59) | | | | | | | |



© 2000 - 2023 ECHONET Consortium

| | | | | | | | | | |
|---|---|---|---|---|---|---|---|---|---|
| OFF timer-based reservation setting | 0x94 | Used to specify whether or not to use the OFF timer-based reservation function.<br>OFF timer-based reservation function ON: 0x41<br>OFF timer-based reservation function OFF: 0x42 | unsigned char | 1 byte | – | Set/Get | | | |
| OFF timer setting (time) | 0x95 | Used to specify the time for the OFF timer-based reservation function in the HH:MM format.<br>0–0x17: 0–0x3B<br>(= 0–23): (= 0–59) | unsigned char × 2 | 2 bytes | – | Set/Get | | | |
| Set value of OFF timer relative time | 0x96 | Timer value HH:MM<br>0–0x17: 0–0x3B<br>(= 0–23):(= 0–59) | unsigned char × 2 | 2 bytes | – | Set/Get | | | |

Note: In the “Announcement at status change” column, ○ denotes mandatory processing when the property is implemented.

(1) Operation status (inherited from the device object super class property)

This property indicates the operation/stop status of the electric heater. The property value of 0x30/0x31 shall be associated with both operation and stop.

(2) Automatic temperature control setting

This property indicates the operation status ON/OFF setting when the electric heater is operated by the automatic temperature setting calculation algorithm of the electric heater body without using “Set temperature value” (EPC = 0xB3) as the target value. This property shall take 0x41 for automatic status ON and 0x42 for automatic status OFF.

(3) Temperature setting

This property indicates the set temperature value in the current “operation mode” in °C. If the electric heater does not have the “temperature automatic setting” function, or if the electric heater having the “temperature automatic setting” function is placed in the “non-automatic” (0x42) state, the electric heater operates on the assumption that the value of this property is the target temperature value. If the target temperature value indicated by this property is unknown when the “temperature automatic setting” function is placed in the “automatic” state, this property shall take the value 0xFD (set temperature value unknown).

(4) Measured room temperature

This property indicates the measured value of the room temperature in °C. The property value range shall be 0x81 to 0x7E (-127 to 126°C). When the property value of the actual device is higher than the property value range, the overflow code 0x80 shall be used. When the property value is lower than the property value range, the underflow code 0x7E shall be used.



© 2000 - 2023 ECHONET Consortium

(5) Remotely set temperature

This property indicates the last temperature (°C) set by the user using a remote controller unit. This property is used for reference purposes after changing the temperature setting for the electric heater by means of a controller, etc.

(6) Air flow rate setting

Used to specify the air flow rate or to specify using the function to automatically control the air flow rate. The air flow rate shall be selected from among the 8 levels predefined in the 0x31 to 0x38 range. When the automatic air flow rate control function is used, the property value shall be 0x41. The air flow rate values for the 8 levels may be defined freely, as long as 0x31 and 0x38 are used for the minimum and maximum air flow rates, respectively.

(7) ON timer-based reservation setting

Sets the reservation ON/OFF of the ON timer. This property is related to the “Set value of ON timer time” or “Set value of ON timer relative time”.

Reservation ON = 0x41, reservation OFF = 0x42

(8) ON timer setting (time)

This property indicates the electric heater ON time with “ON timer reservation status” ON by hour: 0x00 to 0x17 (0 to 23) and minute: 0x00 to 0x3B (0 to 59). The property shall begin with the high-order byte in the order of hour, minute.

(9) ON timer setting (relative time)

This property indicates the electric heater ON time with “ON timer time reservation status” ON by the relative time from the current time. The data format shall be hour: 0x00 to 0x17 (0 to 23) and minute: 0x00 to 0x3B (0 to 59), and the property value shall begin with the high-order byte in the order of hour, minute.

(10) OFF timer-based reservation setting

Sets the reservation ON/OFF of the OFF timer. This property is associated with the “Set value of OFF timer time” or “Set value of OFF timer relative time”.

Reservation ON = 0x41, reservation OFF = 0x42

(11) OFF timer setting (time)

This property indicates the air conditioner OFF time with “OFF timer reservation status” ON by hour: 0x00 to 0x17 (0 to 23) and minute: 0x00 to 0x3B (0 to 59). The property value shall begin with the high-order byte in the order of hour, minute.



© 2000 - 2023 ECHONET Consortium

(12) Set value of OFF timer relative time

This property indicates the air conditioner OFF time by the relative time from the current time with “OFF timer reservation status” ON. The data format shall be hour: 0x00 to 0x17 (2 to 23) and minute: 0x00 to 0x3B (0 to 59). The property value shall begin with the high-order byte in the order of hour, minute.



© 2000 - 2023 ECHONET Consortium

## 3. 2. 7 Requirements for Fan heater class

Class group code : 0x01

Class code : 0x43

Instance code : 0x01-0x7F (0x00: All-instance specification code)

| Property name | EPC | Contents of property<br>Value range (decimal notation) | Data type | Data size | Unit | Access rule | Man-datory | Announcement at status change | Remark |
|---|---|---|---|---|---|---|---|---|---|
| Operation status | 0x80 | This property indicates the ON/OFF status. | unsigned char | 1 byte | — | Set | ○ | ○ | |
| | | ON=0x30, OFF=0x31 | | | | Get | ○ | | |
| Temperature setting value | 0xB3 | Sets the temperature and gets the setting status. | unsigned char | 1 byte | °C | Set/Get | ○ | | |
| | | 0x00–0x32 (0–50°C) | | | | | | | |
| Measured temperature | 0xBB | This property indicates the measured room temperature. | signed char | 1 byte | °C | Get | | | |
| | | 0x81–0x7D (-127–125°C) | | | | | | | |
| Automatic temperature control setting | 0xB1 | Sets automatic/non-automatic and gets the setting status | unsigned char | 1 byte | – | Set/Get | | | |
| | | Automatic = 0x41, non-automatic = 0x42 | | | | | | | |
| ON timer reservation setting | 0x90 | Sets ON/OFF of reservation and gets the setting status. | unsigned char | 1 byte | – | Set/Get | | | |
| | | Reservation ON: 0x41, OFF:0x42 for both time and relative time<br>Timer-based reservation ON:0x43, Relative time reservation ON:0x44 | | | | | | | |
| ON timer setting value (time) | 0x91 | Sets timer value HH:MM and gets setting status | unsigned char × 2 | 2 bytes | – | Set/Get | | | |
| | | 0–0x17: 0–0x3B<br>(= 0–23): (= 0–59) | | | | | | | |
| ON timer setting value (relative time) | 0x92 | Sets timer value HH:MM and gets the updated time | unsigned char × 2 | 2 bytes | – | Set/Get | | | |
| | | 0–0x17: 0–0x3B<br>(= 0–23): (= 0–59) | | | | | | | |
| OFF timer reservation setting | 0x94 | Sets ON/OFF of reservation and gets setting status | unsigned char | 1 byte | – | Set/Get | | | |
| | | Reservation ON: 0x41, OFF:0x42 for both time and relative time<br>Timer-based reservation ON:0x43, Relative time reservation ON:0x44 | | | | | | | |
| OFF timer setting value (time) | 0x95 | Sets timer value HH:MM and gets the setting status. | unsigned char × 2 | 2 bytes | – | Set/Get | | | |
| | | 0–0x17: 0–0x3B<br>(= 0–23): (= 0–59) | | | | | | | |
| OFF timer value (relative time) | 0x96 | Sets timer value HH:MM and gets updated time | unsigned char × 2 | 2 bytes | – | Set/Get | | | |
| | | 0–0x17: 0–0x3B<br>(= 0–23):(= 0–59) | | | | | | | |



© 2000 - 2023 ECHONET Consortium

| | | | | | | | | | |
|---|---|---|---|---|---|---|---|---|---|
| Extensional operation setting | 0xC0 | Sets ON/OFF of extensional operation and gets setting status.<br>Extension ON=0x41, OFF=0x42 | unsigned char | 1 byte | – | Set/Get | | | |
| Extensional operation timer time setting value | 0xC1 | Sets extension time HH:MM and gets the extended time<br>0–0x17: 0–0x3B<br>(= 0–23):(= 0–59) | unsigned char × 2 | 2 bytes | – | Set/Get | | | |
| Ion emission setting | 0xC2 | Sets ON/OFF of ion emission and gets setting status.<br>Emission ON=0x41, OFF=0x42 | unsigned char | 1 byte | – | Set/Get | | | |
| Implemented ion emission method | 0xC3 | Specifies ion emission method implemented in humidifier by bit map<br>Bit 0: negative ion method mounting<br>Bit 1: cluster ion method mounting | unsigned char | 1 byte | – | Get | | | |
| Oil amount level | 0xC4 | Specifies oil amount in the tank by 6 levels.<br>0x40: empty<br>0x41-0x45: minimum to maximum levels | unsigned char | 1 byte | – | Get | | | |

Note: In the “Announcement at status change” column, ○ denotes mandatory processing when the property is implemented.

(1) Operation status (inherited from the device object super class property)

Sets the operation/stop status of the fan heater. The property value of 0x30/0x31 shall be associated with both operation and stop. The access rule “Set” must be implemented for fan heaters.

(2) Temperature setting value

Sets the temperature value in °C and gets the setting status. The fan heater operates as a target of the property value.

(3) Measured temperature value

This property indicates the measured value of the room temperature in °C. The property value range shall be 0x81 to 0x7D. When the property value of the actual device is higher than the property value range, the overflow code 0x7F shall be used. When the property value is lower than the property value range, the underflow code 0x80 shall be used. When a measured temperature cannot be obtained, the code 0x7E shall be used.

(4) Automatic temperature control setting

Sets the operation status ON/OFF when the fan heater is operated by the automatic temperature setting calculation algorithm of the fan heater body without using “Set temperature value” (EPC = 0xB3) as the target value. This property shall take 0x41 for automatic status ON and 0x42 for automatic status OFF.



© 2000 - 2023 ECHONET Consortium

(5) ON timer reservation setting

ON timer reservation setting property specifies whether or not to use the ON timer-based reservation function (i.e. reservation ON or reservation OFF), and to acquire the current setting. This property is related to the “Set value of ON timer time” or “Set value of ON timer relative time”.

Reservation ON = 0x41, reservation OFF = 0x42 for both time reservation and relative time reservation. ON=0x43 for only time reservation, and ON=0x44 for only relative time reservation.

(6) ON timer setting value (time)

This property indicates the fan heater ON time with “ON timer reservation status” ON by hour: 0x00 to 0x17 (0 to 23) and minute: 0x00 to 0x3B (0 to 59). The property shall begin with the high-order byte in the order of hour, minute.

(7) ON timer setting value (relative time)

This property indicates the fan heater ON time with “ON timer reservation status” ON by the relative time from the current time. The data format shall be hour: 0x00 to 0x17 (0 to 23) and minute: 0x00 to 0x3B (0 to 59), and the property value shall begin with the high-order byte in the order of hour, minute.

(8) OFF timer reservation setting

Sets the reservation ON/OFF of the OFF timer. This property is associated with the “Set OFF timer time value” or “Set OFF timer relative time value”.

Reservation ON = 0x41, reservation OFF = 0x42 for both time reservation and relative time reservation. ON=0x43 for only time reservation, and ON=0x44 for only relative time reservation.

(9) OFF timer setting value (time)

Sets the fan heater OFF time with “OFF timer reservation status” ON by hour: 0x00 to 0x17 (0 to 23) and minute: 0x00 to 0x3B (0 to 59). The property value shall begin with the high-order byte in the order of hour, minute.

(10) OFF timer setting value (relative time)

Sets the fan heater OFF time by the relative time from the current time with “OFF timer reservation status” ON. The data format shall be hour: 0x00 to 0x17 (2 to 23) and minute: 0x00 to 0x3B (0 to 59). The property value shall begin with the high-order byte in the order of hour, minute.

(11) Extensional operation setting



© 2000 - 2023 ECHONET Consortium

Sets ON/OFF of the extensional operation and gets the operation status when the operation status (0x80) is ON (0x30). The property has relation to “Extensional timer time setting value”. Extensional operation ON=0x41, extensional operation OFF=0x42.

(12) Extensional operation timer time setting

Sets the operation time of the fan heater by relative time from the current time when “extensional operation setting” is ON. The data format shall be hour: 0x00 to 0x17 (2 to 23) and minute: 0x00 to 0x3B (0 to 59). The property value shall begin with the high-order byte in the order of hour, minute.

(13) Ion emission setting

Sets ON/OFF of the ion emission function implemented in the fan heater, and gets the setting status. Ion emission ON=0x41, Ion emission OFF=0x42.

(14) Implemented ion emission method

Expresses the implemented method of ion emission functions by a bit map. As realizing methods, negative ion method and cluster ion method are specified. The details are as follows. The bit 0 means that the realizing method is not implemented, and bit 1 means that the realizing method is implemented.

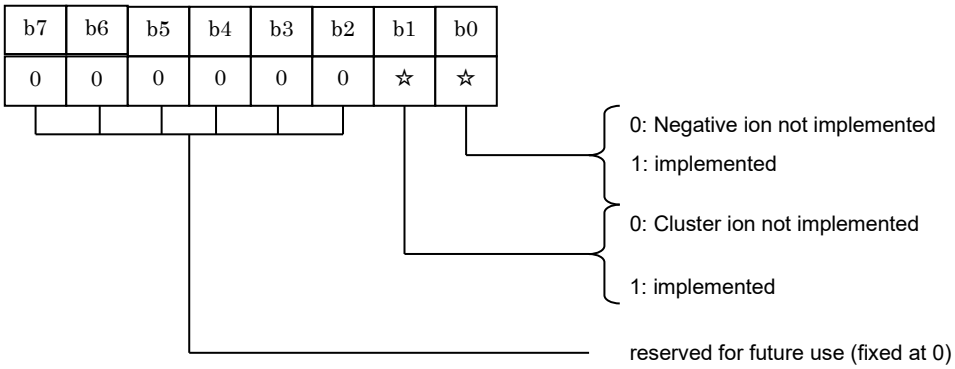


(15) Oil amount level

Expresses an amount of oil remained in the tank by 6 steps. Each value of level is not specified. The empty status is 0x40 and full maximum amount status is 0x45.



© 2000 - 2023 ECHONET Consortium

## 3．2．8 Requirements for electric storage heater class

Class group code : 0x01

Class code : 0x55

Instance code : 0x01 to 0x7F (0x00: All-instance specification code)

| Property name | EPC | Contents of property<br>Value range (decimal notation) | Data type | Data size | Unit | Access rule | Man-datory | Announcement at status change | Remark |
|---|---|---|---|---|---|---|---|---|---|
| Operation status | 0x80 | This property indicates the ON/OFF status.<br>ON = 0x30, OFF = 0x31 | unsigned char | 1 byte | — | Set<br>Get | <br>○ | ○ | |
| Temperature setting | 0xB3 | This property is used to set a temperature and to acquire the setting status.<br>0x00–0x32 (0–50°C) | unsigned char | 1 byte | °C | Set/ Get | | | |
| Rated power consumption | 0xB8 | This property indicates the rated power consumption of heat storage, control, weak air flowing, and strong air flowing.<br>0x0000–0xFFFD (0–65533W)<br>Heat storage: Control: Weak air flowing: Strong air flowing | unsigned short × 4 | 8 bytes | W | Get | | | |
| Measured indoor temperature | 0xBB | Measured indoor temperature<br>0x81–0x7D (-127–125°C) | signed char | 1 byte | °C | Get | | | |
| Measured outdoor temperature | 0xBE | Measured outdoor temperature<br>0x81–0x7D (-127–125°C) | signed char | 1 byte | °C | Get | | | |
| Air flow rate setting | 0xA0 | This property is used to set the air flow level and air flow rate automatic setting and to acquire the setting status.<br>Air flow rate automatic setting = 0x41<br>OFF = 0x31, Weak = 0x32, Strong = 0x33 | unsigned char | 1 byte | - | Set/ Get | | | |
| Fan operation status | 0xA1 | This property indicates the fan operation status.<br>OFF = 0x31, Weak = 0x32, Strong = 0x33 | unsigned char | 1 byte | | Get | | ○ | |
| Heat storage operation status | 0xC0 | This property indicates the heat storage ON/OFF status.<br>ON = 0x30, OFF = 0x31 | unsigned char | 1 byte | | Get | ○ | ○ | |
| Heat storage temperature setting | 0xC1 | This property is used to set the heat storage temperature setting and to acquire the setting status.<br>0x0000–0x3E8 (0–1000°C) | unsigned short | 2 bytes | °C | Set/ Get | ○ | | |
| Measured stored heat temperature | 0xC2 | Measured stored heat temperature<br>0xFF38–0x3E8 (-200–1000°C) | signed short | 2 bytes | °C | Get | ○ | | |
| Daytime heat storage setting | 0xC3 | This property indicates the daytime heat storage ON/OFF status.<br>ON = 0x30, OFF = 0x31 | unsigned char | 1 byte | | Set/Get | | | |
| Daytime heat storage ability | 0xC4 | This property indicates whether heat can be stored in the daytime.<br>Storage possible = 0x30, Storage not possible = 0x31 | unsigned char | 1 byte | | Get | | ○ | |
| Midnight power duration setting | 0xC5 | This property indicates the duration of midnight power.<br>0x00–0x17 (0-23) | unsigned char | 1 byte | | Set<br>Get | <br>○ | | |



© 2000 - 2023 ECHONET Consortium

| | | | | | | | | | |
|---|---|---|---|---|---|---|---|---|---|
| Midnight power start time setting | 0xC6 | This property indicates the midnight power start time.<br>0x00–0x17 (0-23) | unsigned char | 1 byte | | Set/ Get | ○ | | |
| Radiation method | 0xC7 | This property indicates whether the electric storage heater has a fan.<br>With fan = 0x30, Without fan = 0x31 | unsigned char | 1 byte | | Get | ○ | | |
| Child lock setting | 0xC8 | This property indicates the child lock status.<br>ON = 0x30, OFF = 0x31 | unsigned char | 1 byte | | Set/ Get | | ○ | |
| Fan timer 1 setting | 0xD0 | This property is used to specify Reservation ON or OFF of Fan timer 1 and to acquire the setting status.<br>Reservation ON = 0x41, Reservation OFF = 0x42 | unsigned char | 1 byte | | Set/ Get | | | |
| Fan timer 1 ON time setting | 0xD1 | This property is used to set a timer value (HH:MM) and to acquire the setting status.<br>0–0x17:0–0x3B<br>(=0–23):(=0–59) | unsigned char × 2 | 2 bytes | | Set/ Get | | | |
| Fan timer 1 OFF time setting | 0xD2 | This property is used to set a timer value (HH:MM) and to acquire the setting status.<br>0–0x17:0–0x3B<br>(=0–23):(=0–59) | unsigned char × 2 | 2 bytes | | Set/ Get | | | |
| Fan timer 2 setting | 0xD3 | This property is used to specify Reservation ON or OFF of Fan timer 2 and to acquire the setting status.<br>Reservation ON = 0x41, Reservation OFF = 0x42 | unsigned char | 1 byte | | Set/ Get | | | |
| Fan timer 2 ON time setting | 0xD4 | This property is used to set a timer value (HH:MM) and to acquire the setting status.<br>0–0x17:0–0x3B<br>(=0–23):(=0–59) | unsigned char × 2 | 2 bytes | | Set/ Get | | | |
| Fan timer 2 OFF time setting | 0xD5 | This property is used to set a timer value (HH:MM) and to acquire the setting status.<br>0–0x17:0–0x3B<br>(=0–23):(=0–59) | unsigned char × 2 | 2 bytes | | Set/ Get | | | |

Note: In the “Announcement at status change” column, ○ denotes mandatory processing when the property is implemented.

(1) Operation status (inherited from the device super class property)

This property is used to start or stop an electric storage heater and to acquire the operation status.

The start status corresponds to 0x30, and the stop status corresponds to 0x31.

(2) Temperature setting

This property is used to set the temperature under the current fan operation in °C and to acquire the setting status.

This property shall be effective even when the value of the “operation status” property (0x80) is OFF (0x31).

A model with fan installed requires this property.



© 2000 - 2023 ECHONET Consortium

(3) Rated power consumption

This property indicates the rated power consumption of heat storage, control, weak air flowing, and strong air flowing in W. The power consumption is from 0x0000 to 0xFFFD (0 to 65533W). The property value is for heat storage, control, weak air flowing, and strong air flowing from the high-order bytes. When the actual piece of equipment does not support one or more of the functions, the underflow code 0xFFFE shall be used.

If the fan air flow rate cannot be switched, the underflow code 0xFFFE shall be used for weak air flowing.

This property shall be effective even when the value of the “operation status” property (0x80) is OFF (0x31).

(4) Measured indoor temperature

This property indicates the measured indoor temperature in °C. The value range for this property is from 0x81 to 0x7D (-127 to 125°C). When the property value of the actual device is higher than the upper limit of the property value range, the overflow code 0x7F shall be used. When the property value is lower than the lower limit of the property value range, the underflow code 0x80 shall be used. When the measurement value cannot be returned, 0x7E shall be used.

This property shall be effective even when the value of the “operation status” property (0x80) is OFF (0x31).

A model with fan installed requires this property.

(5) Measured outdoor temperature

This property indicates the measured outdoor temperature in °C. The value range for this property is from 0x81 to 0x7D (-127 to 125°C). When the property value of the actual device is higher than the upper limit of the property value range, the overflow code 0x7F shall be used. When the property value is lower than the lower limit of the property value range, the underflow code 0x80 shall be used. When the measurement value cannot be returned, 0x7E shall be used.

This property shall be effective even when the value of the “operation status” property (0x80) is OFF (0x31).

(6) Air flow rate setting

This property is used to set the air flow level and air flow rate automatic setting and to acquire the setting status. The property value for air flow rate automatic setting is 0x41. The air flow rate is set to three levels and the property value is 0x31 to 0x33. The specific value for each air flow level is



© 2000 - 2023 ECHONET Consortium

0x31 for OFF, weak air flowing for 0x32, and strong air flowing for 0x33.
When the air flow rate cannot be changed, the value is 0x31 for OFF and 0x33 for ON.
This property shall be effective even when the value of the “operation status” property (0x80) is OFF (0x31).

(7) Fan operation status
This property is used to acquire the fan operation status. The air flow rate is set to three levels and the property value is 0x31 to 0x33. The specific value for each air flow level is 0x31 for OFF, weak air flowing for 0x32, and strong air flowing for 0x33.
When the air flow rate cannot be changed, the value is 0x31 for OFF and 0x33 for ON.

(8) Heat storage operation status
This property is used to set the storage heater ON/OFF status. The property value is 0x30 for ON and 0x31 for OFF.

(9) Heat storage temperature setting
This property is used to set the heat storage temperature and to acquire the setting status. The value range for this property is from 0x0000 to 0x03E8 (0 to 1000°C).
This property shall be effective even when the value of the “operation status” property (0x80) is OFF (0x31).

(10) Measured stored heat temperature
This property indicates the measured heat storage temperature in °C. The value range for this property is from 0xFF37 to 0x03E8 (-200 to 1000°C). When the property value of the actual device is higher than the upper limit of the property value range, the overflow code 0x7FFF shall be used. When the property value is lower than the lower limit of the property value range, the underflow code 0x8000 shall be used.
This property shall be effective even when the value of the “operation status” property (0x80) is OFF (0x31).

(11) Daytime heat storage setting
This property is used to set daytime heat storage by a storage heater to ON or OFF and to acquire the setting status. The property value is 0x30 for ON and 0x31 for OFF.

(12) Daytime heat storage ability
This property is used to acquire the status of whether the storage heater can store heat in the daytime. The property value is 0x30 when heat storage is possible and 0x31 when not.



© 2000 - 2023 ECHONET Consortium

(13) Midnight power duration setting

This property is used to set the midnight power duration and to acquire the setting status. The property value is 0x00 to 0x17 (0 to 23 hours).

This property shall be effective even when the value of the “operation status” property (0x80) is OFF (0x31).

Reference information: The current power menu of each power company presents three types of power duration. The duration is 5 hours (0x05), 8 hours (0x08), or 10 hours (0x0A).

(14) Midnight power start time setting

This property is used to set the midnight power start time and to acquire the setting status. The value range for this property is 0x00 to 0x17 (00:00 to 23:00). This property shall be effective even when the value of the “operation status” property (0x80) is OFF (0x31).

Reference information: The current power menu of each power company presents five types of midnight power start time. For the duration of 5 or 8 hours, the start time is 00:00 (0x00), 01:00 (0x01), 21:00 (0x15), 22:00 (0x16), or 23:00 (0x17). For the duration of 10 hours, the start time is 22:00 (0x16) only.

(15) Radiation method

This property is used to acquire the fan installation status of an electric storage heater. The property value is 0x30 when a fan is installed and 0x31 when not.

This property shall be effective even when the value of the “operation status” property (0x80) is OFF (0x31).

(16) Child lock setting

This property sets child lock and indicates the setting status. The property value is 0x30 for ON and 0x31 for OFF.

This property shall be effective even when the value of the “operation status” property (0x80) is OFF (0x31).

(17) Fan timer 1 setting

This property is used to specify Reservation ON or OFF of Fan timer 1 and to acquire the setting status. The property value is 0x41 for Reservation ON or 0x42 for Reservation OFF.

This property shall be effective even when the value of the “operation status” property (0x80) is OFF (0x31).



© 2000 - 2023 ECHONET Consortium

(18) Fan timer 1 ON time setting

This property is used to set the Fan timer 1 ON time (HH:MM) and to acquire the setting status.
The value range for this property is from 0 to 0x17:0 to 0x3B (0 to 23):(0 to 59).
This property shall be effective even when the value of the “operation status” property (0x80) is OFF (0x31).

(19) Fan timer 1 OFF time setting

This property is used to set the Fan timer 1 OFF time (HH:MM) and to acquire the setting status.
The value range for this property is from 0 to 0x17:0 to 0x3B (0 to 23):(0 to 59).
This property shall be effective even when the value of the “operation status” property (0x80) is OFF (0x31).

(20) Fan timer 2 setting

This property is used to specify Reservation ON or OFF of Fan timer 2 and to acquire the setting status. The property value is 0x41 for Reservation ON or 0x42 for Reservation OFF.
This property shall be effective even when the value of the “operation status” property (0x80) is OFF (0x31).

(21) Fan timer 2 ON time setting

This property is used to set the Fan timer 2 ON time (HH:MM) and to acquire the setting status.
The value range for this property is from 0 to 0x17:0 to 0x3B (0 to 23):(0 to 59).
This property shall be effective even when the value of the “operation status” property (0x80) is OFF (0x31).

(22) Fan timer 2 OFF time setting

This property is used to set the Fan timer 2 OFF time (HH:MM) and to acquire the setting status.
The value range for this property is from 0 to 0x17:0 to 0x3B (0 to 23):(0 to 59).
This property shall be effective even when the value of the “operation status” property (0x80) is OFF (0x31).



© 2000 - 2023 ECHONET Consortium

## 3. 2. 9 Requirements for package-type commercial air conditioner (indoor unit) (except those for facilities) class

Class group code : 0x01

Class code : 0x56

Instance code : 0x01 to 0x7F (0x00: All-instance specification code)

| Property name | EPC | Contents of property<br>Value range (decimal notation) | Data type | Data size | Unit | Access rule | Man-datory | Announcement at status change | Remark |
|---|---|---|---|---|---|---|---|---|---|
| Operation status | 0x80 | This property indicates the ON/OFF status.<br>ON=0x30, OFF=0x31 | unsigned char | 1 byte | — | Set/Get | ○ | ○ | |
| Operation mode setting | 0xB0 | Used to specify the operation mode (“automatic,” “cooling,” “heating,” “dehumidification” or “air circulation”) and to acquire the current setting.<br>The following values shall be used:<br>Automatic: 0x41<br>Cooling: 0x42<br>Heating: 0x43<br>Dehumidification: 0x44<br>Air circulation: 0x45 | unsigned char | 1 byte | — | Set/Get | ○ | ○ | |
| Temperature setting | 0xB3 | Used to set the temperature setting volume and acquire the current setting.<br>0x00–0x32 (0–50°C) | signed char | 1 byte | 1°C | Set/Get | ○ | ○ | |
| Measured indoor unit temperature | 0xBB | Used to acquire the measured indoor unit temperature (°C).<br>0x81–0x7D<br>(-127–125°C) | signed char | 1 byte | 1°C | Get | | | |
| Thermostat state | 0xAC | This property indicates the state (ON or OFF) of the thermostat.<br>Thermostat ON = 0x41<br>Thermostat OFF = 0x42 | unsigned char | 1 byte | — | Get | ○ | | |
| Current function (automatic operation mode) | 0xAE | This property indicates, when the air conditioner is operating in the “automatic” operation mode, the function (“cooling,” “heating,” “dehumidification,” “air circulation” or “other”) that is currently being used.<br>The following values shall be used:<br>Cooling: 0x42<br>Heating: 0x43<br>Dehumidification: 0x44<br>Air circulation: 0x45<br>Other: 0x40 | unsigned char | 1 byte | — | Get | ○ | | |
| Group information | 0xCA | Used to specify information to link indoor units with outdoor units.<br>No setting = 0x00<br>0x01–0xFD | unsigned char | 1 byte | — | Get | ○ | | |



© 2000 - 2023 ECHONET Consortium

| | | | | | | | | | |
|---|---|---|---|---|---|---|---|---|---|
| Power consumption range for indoor units | 0xDB | Power consumption for indoor units is classified into five groups:<br>0x00: undefined<br>0x01: up to 50W<br>0x02: 50W - 100W<br>0x03: 100W - 150W<br>0x04: 150W - 200W<br>0x05: 200W - | unsigned char | 1 byte | — | Get | | | |

Note: In the “Announcement at status change” column, ○ denotes mandatory processing when the property is implemented.

Note1: Either the “temperature setting 1” property (0xB3) or “temperature setting 2” property (0xE3) must be implemented.

(1) Operation status (inherited from the device super class property)

Used to specify whether to turn on or off the package-type commercial air conditioner (indoor unit), and to acquire the current operation status.

0x30 and 0x31 shall be used for the ON and OFF states, respectively.

(2) Operation mode setting

Used to specify the operation mode of the package-type commercial air conditioner (indoor unit) (“automatic,” “cooling,” “heating,” “dehumidification” or “air circulation”) and to acquire the current setting. 0x41, 0x42, 0x43, 0x44 and 0x45 shall be used for “automatic,” “cooling,” “heating,” “dehumidification” and “air circulation,” respectively.

It is only required to implement the property values that correspond to the functions provided by the actual piece of equipment in which this class is implemented. For example, if the piece of equipment in which this class is implemented does not have an air circulation function, it is not necessary to implement the value for the air circulation mode (0x45).

This property indicates normal values regardless of the operation status property value (0x80) is ON (0x30) or OFF (0x31).

(3) Temperature setting

Used to set the temperature (in 1°C increments) for the current operation mode of the indoor unit that is specified by the “operation mode setting (0xB0)” property, and to acquire the current setting. The air conditioner shall use the value of this property as the target temperature.

This property is the value of the operation mode set at “operation mode setting (0xB0)”. This property indicates normal values regardless of the operation status property value (0x80) is ON (0x30) or OFF (0x31).

(4) Measured indoor unit temperature



© 2000 - 2023 ECHONET Consortium

This property indicates the measured indoor unit temperature in 1°C increments. The property value range shall be 0x81 to 0x7D (-127 to 125°C). When the property value of the actual piece of equipment is higher than the upper limit of the property value range, the overflow code 0x7F shall be used. When the property value is lower than the lower limit of the property value range, the underflow code 0x80 shall be used. When the measurement value cannot be returned, 0x7E shall be used.

This property indicates normal values only when the operation status property value (0x80) is ON (0x30).

(5) Thermostat state

This property indicates the state (ON or OFF) of the thermostat of the package-type commercial air conditioner (indoor unit).

0x41 and 0x42 shall be used for the ON and OFF states, respectively.

This property indicates normal values only when the operation status property value (0x80) is ON (0x30).

(6) Current function (“automatic” operation mode)

When “automatic” is specified by the “operation mode setting” property (EPC = 0xB0) for the package-type commercial air conditioner (indoor unit), this property is used to acquire information as to which function (of the actual piece of equipment) is currently being used (i.e. “cooling,” “heating,” “dehumidification” or “air circulation”). 0x42, 0x43, 0x44 and 0x45 shall be used for “cooling,” “heating,” “dehumidification,” “air circulation” and “other,” respectively. “Other” shall mean that the air conditioner is in operation but is not performing any of the “cooling,” “heating,” “dehumidification” and “air circulation” functions.

It is only required to implement the property values that correspond to the functions provided by the actual piece of equipment in which this class is implemented. For example, if the piece of equipment in which this class is implemented does not have an air circulation function, it is not necessary to implement the value for the air circulation function (0x45).

This property indicates normal values only when the operation status property value (0x80) is ON (0x30) and operation mode setting property (0xB0) is automatic (0x41).

(7) Group information

Group information property values provide information to link air conditioners (indoor units) with air conditioners (outdoor units). Air conditioners (indoor units) and air conditioners (outdoor units) with the same property values shall be connected using the same refrigerant piping. Note that the value shall be unique within identical ECHONET/ECHONET Lite domains.



© 2000 - 2023 ECHONET Consortium

(8) Power consumption range for indoor units

Power consumption for indoor units is classified into five groups:

0x00: undefined

0x01: up to 50W

0x02: 50W - 100W

0x03: 100W - 150W

0x04: 150W - 200W

0x05: 200W -



© 2000 - 2023 ECHONET Consortium

## 3．2．10 Requirements for package-type commercial air conditioner (outdoor unit) (except those for facilities) class

Class group code : 0x01

Class code : 0x57

Instance code : 0x01 to 0x7F (0x00: All-instance specification code)

| Property name | EPC | Contents of property | Data type | Data size | Unit | Access rule | Man-datory | Announcement at status change | Remark |
|---|---|---|---|---|---|---|---|---|---|
| | | Value range (decimal notation) | | | | | | | |
| Operation status | 0x80 | This property indicates the ON/OFF status. | unsigned char | 1 byte | — | Set | | ○ | |
| | | ON=0x30, OFF=0x31 | | | | Get | ○ | | |
| Rated power consumption of outdoor unit | 0xB8 | Used to acquire the rated power consumption for the cooling and heating modes. | unsigned long × 2 | 8 bytes | W | Get | | | |
| | | 0x00000000–0xFFFFFFFD (0–4,294,967,293W)<br>Cooling: heating | | | | | | | |
| Measured outdoor unit temperature | 0xBE | Used to acquire the measured outdoor unit temperature (°C). | signed char | 1 byte | 1°C | Get | | | |
| | | 0x81–0x7D (-127–125°C) | | | | | | | |
| Special state | 0xAB | This property indicates when the air conditioner is in the “special” state | unsigned char | 1 byte | — | Get | | | |
| | | “Normal operation” state = 0x40, “special” state = 0x41 | | | | | | | |
| Group information | 0xCA | Used to acquire information to link indoor units with outdoor units | unsigned char | 1 byte | — | Get | ○ | | |
| | | No setting = 0x00<br>0x01–0xFD | | | | | | | |
| Measured power consumption of outdoor unit | 0xDB | Used to acquire the measured power consumption of the outdoor unit. | unsigned long | 4 bytes | W | Get | ○ | | |
| | | 0x00000000–0xFFFFFFFD (0–4,294,967,293W) | | | | | | | |
| Possible power savings for outdoor units | 0xDD | This property indicates possible power savings (W) based on current operation status. | unsigned long | 4 bytes | W | Get | ○ | | |
| | | 0x00000000–0xFFFFFFFD<br>(0–4,294,967,293W) | | | | | | | |
| Settings restricting power consumption of outdoor units | 0xDE | Setting/reading power (W) to be saved | unsigned long | 4 bytes | W | Set/Get | ○ | | |
| | | Restricting power consumption: 0x00000000<br>0x00000001–0xFFFFFFFD<br>(1–4,294,967,293W) | | | | | | | |
| Minimum power consumption for restricted outdoor unit | 0xDF | This property indicates the minimum possible power consumption savings. | unsigned long | 4 bytes | W | Get | | | |
| | | 0x00000000–0xFFFFFFFD<br>(0–4,294,967,293W) | | | | | | | |

Note: In the “Announcement at status change” column, ○ denotes mandatory processing when the



© 2000 - 2023 ECHONET Consortium

property is implemented.

(1) Operation status (inherited from the device super class property)

Used to specify whether to turn on or off the package-type commercial air conditioner, and to acquire the current operation status. 0x30 and 0x31 shall be used for the ON and OFF states, respectively. In cases where the package-type commercial air conditioner (outdoor unit) belongs to a node in which the “package-type commercial air conditioner (outdoor unit)” class is implemented and is ready to respond to user operation as soon as the node starts up, 0x30 may be implemented as the fixed value.

(2) Rated power consumption of outdoor unit

This property indicates, in watts, the rated power consumption values (brochure values) for the “cooling” and “heating” modes. The range of rated power consumption value for each of the 3 modes shall be 0x00000000 to 0xFFFFFFFD (0 to 4,294,967,293W) and the bytes shall be used in such a manner that the two values are indicated in the order stated in the previous sentence. When the actual piece of equipment does not support one or more of the three modes, the underflow code 0xFFFFFFFE shall be used for the unsupported mode(s).

(3) Measured outdoor unit temperature

This property indicates, in 1°C increments, the measured air temperature where the outdoor unit of the package-type commercial air conditioner is installed. The property value range shall be 0x81 to 0x7D (-127 to 125°C). When the property value of the actual piece of equipment is higher than the upper limit of the property value range, the overflow code 0x7F shall be used. When the property value is lower than the lower limit of the property value range, the underflow code 0x80 shall be used. When the measurement value cannot be returned, 0x7E shall be used.

This property indicates normal values only when the operation status property value (0x80) is ON (0x30).

(4) Special state

This property indicates when the package-type commercial air conditioner is in the “special” state. The value of a property in a normal state shall be 0x40, while the value of a property in a special state other than normal shall be 0x41. The term “special state” means an operation that is required for air conditioner functions and that cannot be changed by outside instructions.

This property indicates normal values only when the operation status property value (0x80) is ON (0x30).



© 2000 - 2023 ECHONET Consortium

(5) Group information

Group information property values provide information to link air conditioners (indoor units) with air conditioners (outdoor units). Air conditioners (indoor units) and air conditioners (outdoor units) with the same property values shall be connected using the same refrigerant piping. The value shall be unique within identical ECHONET/ECHONET Lite domains.

(6) Measured power consumption of outdoor unit (A in Fig. 3-3~~Fig. 3-3~~)

This property indicates outdoor unit power consumption (W). The property value range shall be 0x00000000 to 0xFFFFFFFD (0 to 4,294,967,293W). When the property value of the actual piece of equipment is higher than the upper limit of the property value range, 0xFFFFFFFF shall be used.

This property indicates normal values only when the operation status property value (0x80) is ON (0x30).

(7) Possible power savings for outdoor units (B in Fig. 3-3~~Fig. 3-3~~)

This property indicates possible power savings in W based on current operation status. This property indicates normal values only when the operation status property value (0x80) is ON (0x30). When the property value of the actual piece of equipment is higher than the upper limit of the property value range, 0xFFFF shall be used.

(8) Settings restricting power consumption of outdoor units (Designation for Fig. 3-3~~Fig. 3-3~~ B: D)

Setting power (W) to be saved/reading set value to restrict power consumption. As a rule, set a numerical figure equal to or smaller than the possible power savings for outdoor units (B).

Set 0x00000000 when canceling the restriction. In some products, this property will be automatically reset to 0x00000000 at 30 min after setting. Note controlling this property should take account of the accuracy of clocks embedded in the devices.

The range of property values shall be: 0x00000001 - 0xFFFFFFFD (1 - 4,294,967,293W).

The outdoor unit operates at the minimum outdoor unit power consumption restriction (C), when the outdoor unit power consumption restriction setting is high and “minimum power consumption for restricted outdoor unit (C) > measured outdoor unit power consumption (A) – outdoor unit power consumption restriction setting (D)”.

(9) Minimum power consumption for restricted outdoor unit (C in Fig. 3-3~~Fig. 3-3~~)

This property indicates minimum power consumption (W) at which the consumer-designated device can operate.

The property value range is 0x00000001 to 0xFFFFFFFD (1 to 4,294,967,293 W). When the



© 2000 - 2023 ECHONET Consortium

property value of the actual device is higher than the upper bound of the value range, 0xFFFFFFFF shall be used.

The outdoor unit operates at the minimum outdoor unit power consumption restriction (C), when the outdoor unit power consumption restriction setting is high and “minimum power consumption for restricted outdoor unit (C) > measured outdoor unit power consumption (A) – outdoor unit power consumption restriction setting (D)”.

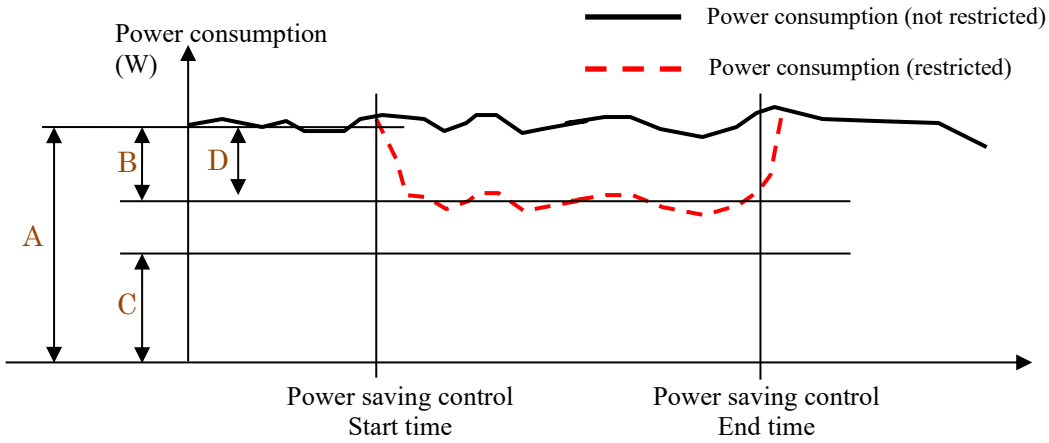


A: Measured outdoor unit power consumption
B: Savable power consumption for outdoor unit
C: Minimum consumption power for restricting outdoor unit (Power required by consumer to ensure minimally air-conditioned environment)
D: Outdoor unit consumption power restriction setting

The following relationship shall be maintained: $A - D \geqq C$

Fig. 3-3 Power restriction control of commercial-use package air conditioner (example)



© 2000 - 2023 ECHONET Consortium

# Reference: Current status of commercial-use air conditioners

I. Commercial-use air conditioners

Commercial-use air conditioners (also known as “package air conditioners”) are mainly designed and manufactured for offices and stores in commercial buildings. Commercial-use direct-expansion air conditioners include air conditioners that drive a compressor using a gas engine instead of a motor. These are commonly known as GHPs and are classified separately from those driven by a motor compressor.

Today, commercial-use air conditioners fall into three categories, depending on the purpose of the building: air conditioners for stores, multi-purpose air conditioners for buildings, and air conditioners for facilities. Air conditioners are presented according to these categories in leaflets created by manufacturers.

1) Air conditioners for stores

Air conditioners for stores are mainly used in small stores and offices. They are typically installed in the ceiling of these stores, and have air blowout ports in four directions. They have quite a wide variety of indoor units, such as the ceiling suspended type, ceiling mounted type, and floor mounted type. Their cooling capacities widely vary from 3 kW to 30 kW.

The most typical cooling system is the separate air heat source type with a combination of an outdoor unit and an indoor unit. However, some of them have two or three units (even in this case, the units are not individually controlled, since the air conditioner is used for the same room).

Example of major indoor units

Outdoor unit

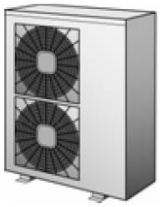

2) Multi-purpose air conditioners for buildings

Multi-purpose air conditioners for buildings are air conditioner systems typically designed for small or medium sized buildings. They have functions to individually control many indoor units connected to the air conditioner with outdoor unit modules. The typical cooling system for these air conditioners is the air heat source separate type; however, some of them use a water heat source for cooling.



© 2000 - 2023 ECHONET Consortium

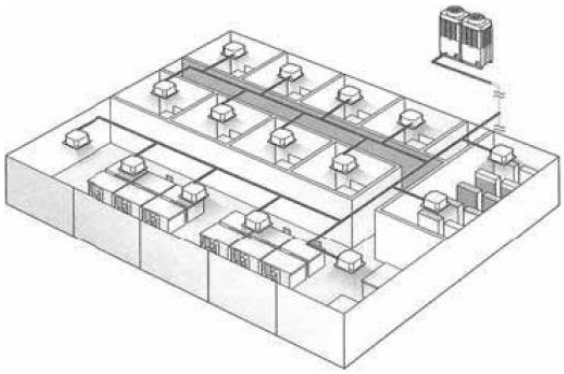

3) Air conditioners for facilities

Air conditioners for facilities are typically used for large interior spaces, such as factories. They have a box-like shape and are placed on the floor. They are considered to be the original model for commercial-use air conditioners. These systems are typically the water-cooling and integrated type or the air-cooling remote condenser type. However, the separate type is becoming more common recently.

Note that this type includes the “wall-through type” unit that is placed at the perimeter (at the window) and extends through the wall of medium-size buildings.

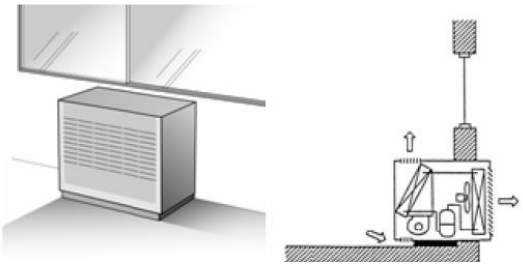

(“Reference: Current status of commercial-use air conditioners” copyright held by the Japan Refrigeration and Air Conditioning Industry Association. All rights reserved.)



© 2000 - 2023 ECHONET Consortium

## 3. 2. 11 Requirements for gas heat pump-type commercial air conditioner (indoor unit) class

Class group code : 0x01

Class code : 0x58

Instance code : 0x01 to 0x7F (0x00: All-instance specification code)

| Property name | EPC | Contents of property<br>Value range (decimal notation) | Data type | Data size | Unit | Access rule | Man-datory | Announcement at status change | Remark |
|---|---|---|---|---|---|---|---|---|---|
| Operation status | 0x80 | This property indicates the ON/OFF status.<br>ON=0x30, OFF=0x31 | unsigned char | 1 byte | - | Set/ Get | ○ | ○ | |
| Operation mode setting | 0xB0 | Used to set the automatic / cooling / heating / dehumidifying / ventilation operating mode and acquire the setting status.<br>The following codes shall be assigned respectively:<br>0x41, 0x42, 0x43, 0x44, 0x45 | unsigned char | 1 byte | — | Set/ Get | ○ | ○ | |
| Temperature setting value | 0xB3 | Used to set the temperature setting volume and acquire the current setting.<br>0x00-0x32 (0-50 ºC) | unsigned char | 1 byte | 1℃ | Set/ Get | ○ | ○ | |
| Measured temperature value of indoor unit | 0xBB | Used to acquire measurements of indoor unit.<br>0x81-0x7D<br>(-127-125ºC) | signed char | 1 byte | 1℃ | Get | | | |
| Thermo status | 0xAC | This property indicates the ON/OFF status of the thermo.<br>Thermo ON=0x41, Thermo OFF=0x42 | unsigned char | 1 byte | — | Get | ○ | | |
| Operation mode status during automatic operation | 0xAE | Cooling / heating / dehumidifying / ventilation / other<br>Following codes shall be assigned respectively:<br>0x42, 0x43, 0x44, 0x45, 0x40 | unsigned char | 1 byte | — | Get | ○ | | |
| Group information | 0xCA | Information to link indoor units with outdoor units.<br>0x00: No setting<br>0x01-0xFD | unsigned char | 1 byte | — | Get | ○ | | |
| Power consumption range for indoor units | 0xDB | Power consumption for indoor units is classified into five groups:<br>0x00: TBD<br>0x01: Less than 50W<br>0x02: 50W-100W<br>0x03: 100W-150W<br>0x04: 150W-200W<br>0x05: Over 200W | unsigned char | 1 byte | — | Get | | | |

Note 1: In the “announcement at status change” column, ○ denotes mandatory processing when the property is implemented.



© 2000 - 2023 ECHONET Consortium

(1) Operation status (inherited from the super class property)

Used to set the operation/stop status for the gas heat pump-type commercial air conditioner (indoor unit) and acquire the setting status. Property values “0x30” and “0x31” shall be assigned to the operation and stop states, respectively.

(2) Operation mode setting

Used to set the automatic/cooling/heating/dehumidifying/ventilation operating mode for the gas heat pump-type commercial air conditioner (indoor unit) and acquire the setting status. Property values 0x41/0x42/0x43/0x44/0x45 shall be assigned to each of these operating modes in that order.

As for the property values adopted, devices implementing this class need only implement property values that can be adopted as their functions. For example, if an actual device equipped with this class is not equipped with the ventilation function as one of its functions, there is no need to implement 0x45 for ventilation.

This property indicates normal values regardless of the operation status property value (0x80) is ON (0x30) or OFF (0x31).

(3) Temperature setting value

Used to set temperature setting at current “operation mode setting” (0xB0) of the indoor unit in units of 1 °C of and acquire the setting status. The air conditioners shall operate with the property value as a target temperature. This property is the value of the operation mode set at “operation mode setting (0xB0)”. This property indicates normal values regardless of the operation status property value (0x80) is ON (0x30) or OFF (0x31).

(4) Measured temperature value of indoor unit

This property indicates the measured temperature value of indoor unit in units of 1°C. The property value range shall be from 0x81 to 0x7D (-127-125 °C). When the property value of the actual device exceeds this property value range, the overflow code 0x7F shall be used. When said value is below the property value range, the underflow code 0x80 shall be used. If the measured value cannot be sent, 0x7E shall be used.

This property indicates normal values only when the operation status property value (0x80) is ON (0x30).

(5) Thermo status

This property indicates the thermo ON/OFF status for the gas heat pump-type commercial air conditioner (indoor unit). Property values “0x41” and “0x42” shall be assigned to the thermo ON and OFF, respectively. This property indicates normal values only when the operation status property



© 2000 - 2023 ECHONET Consortium

(0x80) is ON (0x30).

(6) Operation mode status during automatic operation

Used to acquire the operation mode of the actual device when “operation mode setting” (EPC=0xB0) is in “Automatic mode” for gas heat pump-type commercial air conditioners (indoor units). Property values 0x42/0x43/0x44/0x45 shall be assigned to cooling/heating/dehumidifying/ventilation in that order. As for the property values adopted, devices implementing this class need only implement property values that can be adopted as their functions. For example, if an actual device equipped with this class is not equipped with the ventilation function as one of its functions, there is no need to implement 0x45 for ventilation.

This property indicates normal values only when the operation status property value (0x80) is ON (0x30), and operation mode setting property value (0xB0) is Automatic (0x41).

(7) Group information

Group information property values provide information to link air conditioner indoor units with air conditioner outdoor units. Air conditioner indoor units and air conditioner outdoor units with the same property values shall be connected using the same refrigerant piping. Note that the value shall be unique within identical ECONET/ECHONET Lite domains.

(8) Power consumption range for indoor units

Current power consumption for indoor units is classified into five groups:

0x00: TBD

0x01: Less than 50W

0x02: 50W-100W

0x03: 100W-150W

0x04: 150W-200W

0x05: Over 200W



© 2000 - 2023 ECHONET Consortium

## 3. 2. 12 Requirements for gas heat pump-type commercial air conditioner (outdoor unit) class

Class group code : 0x01

Class code : 0x59

Instance code : 0x01 to 0x7F (0x00: All-instance specification code)

| Property name | EPC | Contents of property<br>Value range (decimal notation) | Data type | Data size | Unit | Access rule | Man-datory | Announcement at status change | Remark |
|---|---|---|---|---|---|---|---|---|---|
| Operation status | 0x80 | This property indicates the ON/OFF status.<br>ON=0x30, OFF=0x31 | unsigned char | 1 byte | - | Set<br>Get | <br>○ | ○ | |
| Measured temperature value of outdoor unit | 0xBE | Used to acquire measurements of outdoor unit.<br>0x81-0x7D<br>(-127-125ºC) | Signed char | 1 byte | 1℃ | Get | | | |
| Measured cumulative gas consumption | 0xC0 | This property indicates the cumulative gas consumption in units of 0.001m$^3$.<br>0x00000000-0x3B9AC9FF<br>(0-999,999.999 m$^3$) | unsigned long | 4 bytes | 0.001 m3 | Get | | | |
| Group information | 0xCA | Information to link indoor units with outdoor units.<br>0x00: No setting<br>0x01-0xFD | unsigned char | 1 byte | ― | Get | ○ | | |
| Time slot operation factor setting | 0xE0 | This property indicates the valid/invalid status of the operation factor setting.<br>This property further indicates the operation factor to be set for outdoor units for the period between the start time and the end time.<br>・Start time hh:mm<br>・End time (hh:mm)<br>・Operation factor pp%<br>The first byte: Operation factor setting valid/invalid designation<br>0x30: valid, 0x31: invalid<br>Successive bytes shall have no meaning only if the operation factor setting is “valid”.<br>The second to third bytes: Start time<br>hh: 0x00-0x17 (0-23)<br>mm: 0x00-0x3B (0-59)<br>The fourth to fifth bytes: End time<br>hh: 0x00-0x17 (0-23)<br>mm: 0x00-0x3B (0-59)<br>The sixth byte: Operation factor<br>0x00-0xC8 (0-200%) | unsigned char ×6 | 6 bytes | | Set/ Get | | | |
| Allowable operation factor | 0xE1 | The percentage of the lowest allowable operation factor can be set for the time slot operation factor setting, highest allowable percentage, and operation factor step percentage | unsigned char ×3 | 3 bytes | % | Get | | | |



© 2000 - 2023 ECHONET Consortium

| | | | | | | | | | |
|---|---|---|---|---|---|---|---|---|---|
| | | The first byte: Lower limit of the operation factor<br>0x00-0xC8 (0-200%)<br>The second byte: Highest allowable operation factor<br>0x00-0xC8 (0-200%)<br>The third byte: operation factor step<br>0x01-0x64 (1-100%),<br>0xFF (invalid) | | | | | | | |

Note 1: In the "announcement at status change" column, ○ denotes mandatory processing when the property is implemented.

(1) Operation status (inherited from the super class property)

Used to set the operation/stop status for the gas heat pump-type commercial air conditioner (outdoor unit) and acquire the setting status. Property values "0x30" and "0x31" shall be assigned to the operation and stop states, respectively.

In cases where the commercial-use package air conditioner outdoor unit belongs to a node and the unit is ready to accept control as soon as the node starts up, this property may be implemented as the fixed value (0x30).

(2) Measured temperature value of outdoor unit

This property indicates the measured temperature value of the place where the gas heat pump-type commercial air conditioner (outdoor unit) is installed in units of 1°C. The property value range shall be from 0x81 to 0x7D (-127-125 °C). When the property value of the actual device exceeds this property value range, the overflow code 0x7F shall be used. When said value is below the property value range, the underflow code 0x80 shall be used. If the measured value cannot be sent, 0x7E shall be used.

This property indicates normal values only when the operation status property value (0x80) is ON (0x30).

(3) Measured cumulative gas consumption

This property indicates the cumulative gas consumption in units of 0.001 $m^3$. The property value range shall be from 0x00000000 to 0x3B9AC9FF (0 to 999,999.999 m3). In the event of a cumulative gas consumption overflow, the counting of the cumulative gas consumption shall be restarted from 0x00000000.

(4) Group information

Group information property values provide information to link air conditioner indoor units with air conditioner outdoor units. Air conditioner indoor units and air conditioner outdoor units with the same



© 2000 - 2023 ECHONET Consortium

property values shall be connected using the same refrigerant piping. Note that the value shall be unique within identical ECONET/ECHONET Lite domains.

(5) Time slot operation factor setting

The time slot operation factor shall be set for gas heat pump-type commercial air conditioners (outdoor units). The time slot operation factor setting valid/invalid designation, start time and end time for the operation factor setting, and operation factor shall be designated. When setting the time slot operation factor, the operation factor setting valid/invalid designation shall be set to “valid”. When canceling the already-set operation factor setting, set the operation factor setting valid/invalid designation to “invalid”. If the operation factor setting valid/invalid designation is set to “invalid”, values for the second and successive bytes shall have no meaning.

If the time slot operation factor with operation factor setting valid/invalid designation is set to “valid”, it means that the operation factor is set every day, from the start time to the end time. Therefore, when finishing the operation factor setting, it is necessary to set the time slot operation factor with operation factor setting valid/invalid designation set to “invalid”. If the end time value is larger than the start time value, the end time shall be interpreted as the time on the same day as the start time. Setting a value smaller than the start time shall be possible. In such case, the end time shall be interpreted as the time on the day following the start time.

Only one time slot operation factor setting shall be set. If the time slot operation factor is set once again for a gas heat pump-type commercial air conditioner (outdoor unit) whose time slot operation factor has already been set, the time slot operation factor setting that has been designated at the later time shall be valid.

It is also possible to acquire the time slot operation factor setting that has already been set. As a result of acquirement, if the operation factor setting valid/invalid designation is set to “invalid”, values for the second and succeeding bytes shall have no meanings.

The operation factor shall be defined as 100% when not being controlled, while being defined 0% when in suspended operation as an outdoor unit. The status “in suspended operation as an outdoor unit” means that the air conditioner function is suspended. However, unlike the “operation status” being “suspended”, acquiring and controlling properties are acceptable. Therefore, the actual status of the device shall depend on actual implementation.

Depending on the gas heat pump-type commercial air conditioners (outdoor units), there are some air conditioners that can set operation factors higher than the uncontrolled rated status. Therefore, values exceeding 100% may be designated in some cases. From 1% to 200% operation factors, what should be considered as criteria and what controls should be imposed on the outdoor units shall depend on actual implementation. When the setting designating the operation factor ＝100%, it shall mean the same as canceling the control. The operation factors that can actually be set on the devices can be



© 2000 - 2023 ECHONET Consortium

acquired with “settable operation factor ".

Note that the operation factors that can be set may be restricted depending on the devices. If the operation factors that can be set are discrete, the nearest operation factors not exceeding the designated operation factor shall be set.

(6) Allowable operation factor

This property indicates the upper limit value (%) and the lower limit value (%) of the operation factor that can be set with the “time slot operation factor setting”, and the operation factor step (%) that can be set between the upper and lower limit values. The lower limit of the operation factor shall not be higher than the upper limit or operation factor.

The operation factor steps shall have valid values only when the operation factors that can be set are set at even intervals. Otherwise, the operation factor shall be set to 0xFF (invalid), and it is impossible to know the operation factor that can be set between the upper and lower limits.



© 2000 - 2023 ECHONET Consortium

## 3. 2. 13 Requirements for range hood class

Class group code : 0x01

Class code: 0x5A

Instance code: 0x01–0x7F (0x00: All-instance specification code)

| Property name | EPC | Contents of property<br>Value range (decimal notation) | Data type | Data size | Unit | Access rule | Man-datory | Announcement at status change | Remark |
|---|---|---|---|---|---|---|---|---|---|
| Operation status | 0x80 | This property indicates the ON/OFF status<br>ON = 0x30, OFF = 0x31 | unsigned char | 1 byte | — | Set<br>Get | ○<br>○ | ○ | |
| Range hood automatic setting | 0xBF | Automatic/Non-automatic<br>Automatic = 0x41, Non-automatic = 0x42 | unsigned char | 1 byte | — | Set/ Get | | | |
| Ventilation air flow rate setting | 0xA0 | Ventilation air flow rate level and ventilation air flow rate<br>Sets Automatic setting. Designates ventilation Air flow level in 8 steps.<br>Ventilation air flow rate automatic status = 0x41<br>Ventilation air flow rate level=0x31–0x38 | unsigned char | 1 byte | — | Set/ Get | ○ | | |
| Lighting operation setting | 0xD0 | This property indicates lighting operation status.<br>Lighting = 0x41, lights-out = 0x42, flashing = 0x43, unknown (0xFD) | unsigned char | 1 byte | — | Set/ Get | | ○ | |
| Light source color setting | 0xD1 | Light source colors shall be set.<br>Light bulb color = 0x41, white = 0x42, neutral white = 0x43, daylight color = 0x44, other = 0x40 | unsigned char | 1 byte | — | Set/ Get | | | |
| Brightness level setting | 0xD2 | This property indicates brightness level in “%”.<br>0x00–0x64 (0–100%) | unsigned char | 1 byte | % | Set/ Get | | | |
| Lighting mode setting | 0xD6 | Automatic/normal lighting/colored lighting<br>Automatic = 0x41, normal lighting = 0x42, colored lighting = 0x43 | unsigned char | 1 byte | — | Set/ Get | | ○ | |
| RGB setting when in colored lighting mode | 0xE0 | Used to set the RGB values when in the colored lighting mode and acquire the current setting.<br>1st byte: R, 2nd byte: G, 3rd byte: B<br>0x00–0xFF (0–255)<br>Minimum brightness = 0x00, maximum brightness = 0xFF | unsigned char×3 | 3 bytes | — | Set/ Get | | | |
| Measured value of indoor temperature | 0xC0 | This property indicates the measured value of indoor temperature in units of 0.1°C.<br>0xF554–0x7FFE (-273.2–3276.6°C) | signed short | 2 bytes | 0.1 °C | Get | | | |
| Measured value of outdoor temperature | 0xC1 | This property indicates the measured value of outdoor temperature in units of 0.1°C.<br>0xF554–0x7FFE (-273.2–3276.6°C) | signed short | 2 bytes | 0.1 °C | Get | | | |



© 2000 - 2023 ECHONET Consortium

| | | | | | | | | | |
|---|---|---|---|---|---|---|---|---|---|
| Measured value of supply air temperature | 0xC2 | This property indicates the measured value of supply air temperature in units of 0.1°C.<br>0xF554–0x7FFE (-273.2–3276.6°C) | signed short | 2 bytes | 0.1 °C | Get | | | |
| Measured value of cooking temperature | 0xC3 | This property indicates the measured value of cooking temperature in units of 0.1°C.<br>0xF554–0x7FFE (-273.2–3276.6°C) | signed short | 2 bytes | 0.1 °C | Get | | | |
| Measured value of indoor relative humidity | 0xC4 | This property indicates measured value of indoor relative humidity in %.<br>0x00–0x64 (0–100%) | unsigned char | 1 byte | % | Get | | | |
| Measured value of outdoor air humidity | 0xC5 | This property indicates measured value of outdoor air humidity in %.<br>0x00–0x64 (0–100%) | unsigned char | 1 byte | % | Get | | | |
| Human detection threshold level setting | 0xC6 | Specifies detection threshold level in 8 steps.<br>0x31–0x38 | unsigned char | 1 byte | — | Set/ Get | | | |
| Human detection status | 0xC7 | This property indicates human motion status.<br>Human motion status found = 0x41, human motion status not found = 0x42 | unsigned char | 1 byte | — | Get | | ○ | |
| Measured value of CO2 concentration | 0xC8 | This property indicates the measured value of CO2 concentration in ppm.<br>0x0000–0xFFFD (0-65533) | unsigned short | 2 bytes | ppm | Get | | | |
| Gas detection threshold level setting | 0xC9 | Specifies gas detection threshold level in 8 steps.<br>Detection threshold level = 0x31–0x38 | unsigned char | 1 byte | — | Set/ Get | | | |
| Gas detection status | 0xCA | This property indicates gas detection status.<br>Gas leak occurrence status found = 0x41,<br>Gas leak occurrence status not found = 0x42 | unsigned char | 1 byte | — | Get | | ○ | |
| Error detection mode | 0xCB | This property indicates that the range hood detected an error.<br>Motor error status = 0x41, rectifier panel detection status = 0x42, normal state = 0x43, other = 0x40 | unsigned char | 1 byte | — | Get | | | |

(1) Operation status (inherited from the super class property)

This property indicates range hood operation/stop status.

Property values 0x30 and 0x31 shall be assigned to the operation and stop states, respectively.

(2) Range hood automatic setting

This property sets Automatic/Non-automatic for the range hood. (Automatic = 0x41, Non-automatic = 0x42)

Automatic = 0x41 is a range hood-specific mode, since it assumes automatic operation (ON/OFF) including lighting operation, while automatic operation is effective. (Specifically, range hood



© 2000 - 2023 ECHONET Consortium

operation is automated using the sensor threshold.)

When Non-automatic = 0x42, automatic operation shall be inactive.

(3) Ventilation air flow rate setting

This property indicates ventilation air flow rate level and ventilation air flow rate automatic status setting. The property value of the ventilation air flow rate automatic status shall be 0x41. Specifies gas air flow rate level in 8 steps and has the property value 0x31—0x38.

Although the specific values for the air flow rate level is not specified, 0x31 shall be the minimum value, while 0x38 shall be the maximum air flow rate level.

(4) Lighting operation setting

The status of whether the lights mounted on the range hood are lit or not is indicated as: lighting = 0x41, lights-out = 0x42, flashing = 0x43.

This property shall be effective even when the value of the “operation status” property (0x80) is OFF (0x31).

(5) Light source color setting

This property sets current light source color (light bulb color / white / neutral white / daylight color/ other), and acquires setting status.

Those indicated as “other” have light source colors that not fall into any of these light source colors.

As for the property values adopted, devices implementing this class need only implement property values that can be adopted as their functions. For example, if an actual device equipped with this class is not equipped with the neutral white as one of its functions, there is no need to implement 0x43 for neutral white.

However, the value of this property when the light source color setting value indicated by this property becomes unknown in an automatic state shall be 0xFD (setting value unknown).

This property shall be effective, even when the value of the “operation status” property (0x80) is OFF (0x31), and lighting operation setting (0xD0) is light-out (0x42).

(6) Brightness level setting

This property indicates current brightness level in “%” Used to set lighting level and acquire the current setting.

If the brightness level of the actual device is higher or lower than the “%” unit, the property of the actual device shall be assigned to the property value of “%” unit specified in this property.

This property shall be effective even when the value of the “operation status” property (0x80) is OFF (0x31), and lighting operation setting (0xD0) is OFF (0x42).



© 2000 - 2023 ECHONET Consortium

This property shall be effective even when the value of the “operation status” property (0x80) is OFF (0x31).

(7) Lighting mode setting

This property sets automatic/normal lighting/colored lighting and acquires the current setting.
Automatic (0x41): the state where lighting equipment automatically controls normal lighting/colored lighting setting using a lighting sensor and automatic dimming algorithm.

Normal lighting (0x42): the mode where the main light source is lit
Colored lighting (0x43): the mode where colored lighting is lit
It is acceptable if actual devices implementing this property only implement property values that can be adopted as their functions.
For example, if automatic function is not implemented, there is no need to implement 0x41 for automatic.

(8) RGB setting when in colored lighting mode

This property sets RGB values when “lighting mode setting” (EPC = 0xD6) is in colored lighting mode (0x43) and acquire the current setting.
Specific values of RGB values are not stipulated. As for the property values adopted, actual devices implementing this class need only implement property values that can be adopted as their functions. **In the case where it is not possible to set RGB values using the value specified by this property, the closest value can be set shall be set.** When this property is implemented, the current setting for the lighting mode setting (EPC = 0xD6) can be set/acquired, even it is other than colored lighting mode (0x43).

(9) Measured value of indoor temperature

This property indicates the measured value of indoor temperature in units of 0.1°C. The property value range shall be 0xF554 to 0x7FFE (-273.2 to 3276.6°C). When the property value of the actual piece of equipment is higher than the upper limit of the property value range, the overflow code 0x7FFF shall be used. When the property value is lower than the lower limit of the property value range, the underflow code 0x8000 shall be used.

(10) Measured value of outdoor temperature

This property indicates the measured value of outdoor temperature in units of 0.1°C. The property value range shall be 0xF554 to 0x7FFE (-273.2 to 3276.6°C). When the property value of the actual piece of equipment is higher than the upper limit of the property value range, the overflow code



© 2000 - 2023 ECHONET Consortium

0x7FFF shall be used. When the property value is lower than the lower limit of the property value range, the underflow code 0x8000 shall be used.

(11) Measured value of supply air temperature

This property indicates the measured value of supply air temperature in units of 0.1°C. The property value range shall be 0xF554 to 0x7FFE (-273.2 to 3276.6°C). When the property value of the actual piece of equipment is higher than the upper limit of the property value range, the overflow code 0x7FFF shall be used. When the property value is lower than the lower limit of the property value range, the underflow code 0x8000 shall be used.

(12) Measured value of cooking temperature

This property indicates the measured value of cooking temperature in units of 0.1°C. The property value range shall be 0xF554 to 0x7FFE (-273.2 to 3276.6°C). When the property value of the actual piece of equipment is higher than the upper limit of the property value range, the overflow code 0x7FFF shall be used. When the property value is lower than the lower limit of the property value range, the underflow code 0x8000 shall be used.

(13) Measured value of indoor relative humidity

This property indicates measured value of indoor relative humidity in units of %. The property value range shall be 0x00 to 0x64 (0 to 100%). When the property value of the actual piece of equipment is higher than the upper limit of the property value range, the overflow code 0xFF shall be used. When the property value is lower than the lower limit of the property value range, the underflow code 0xFE shall be used.

(14) Measured value of outdoor air humidity

This property indicates measured value of outdoor air humidity in units of %. The property value range shall be 0x00 to 0x64 (0 to 100%). When the property value of the actual piece of equipment is higher than the upper limit of the property value range, the overflow code 0xFF shall be used. When the property value is lower than the lower limit of the property value range, the underflow code 0xFE shall be used.

(15) Human detection threshold level setting

Sets the threshold value that causes EPC = 0xC7 “Human detection status” to be set to “Found” (8-step). The minimum value is 0x31 and the maximum value is 0x38. No concrete value is specified for each level.

If the detection threshold of the actual device is higher or lower than the 8-step range, the property of



© 2000 - 2023 ECHONET Consortium

the actual device shall be assigned to the property value of the 8 steps specified in this property.

(16) Human detection status

This property indicates whether a human motion status is found. This property value shall be maintained until the status changes.

Human motion status found = 0x41, human motion status not found = 0x42

(17) Measured value of CO2 concentration

This property indicates the measured value of CO2 concentration in units of ppm. The property value range shall be 0x0000 to 0xFFFD (0 to 65533ppm). When the property value of the actual piece of equipment is higher than the upper limit of the property value range, the overflow code 0xFFFF shall be used. When the property value is lower than the lower limit of the property value range, the underflow code 0xFFFE shall be used. It is only required to implement the property values that are supported by the actual piece of equipment in which this class is implemented.

(18) Gas detection threshold level setting

Sets the threshold of gas detection in 8 steps that causes EPC = 0xCA “Gas detection status” to be set to “found”. The minimum value is 0x31 and the maximum value is 0x38. No concrete value is specified for each level.

If the detection threshold of the actual device is higher or lower than the 8-step range, the property of the actual device shall be assigned to the property value of the 8 steps specified in this property.

(19) Gas detection status

This property indicates whether gas leakage is found or not. If EPC = 0xC9 "Gas detection threshold level setting" is implemented, this property is set to "found" when the detected gas exceeds the threshold.

(20) Error detection mode

This property indicates that the range hood detected an error.

Property value = 0x41 shall be used when the motor has an error status (when the motor has stopped rotating), while property value = 0x42, normal state = 0x43, and other states = 0x40 shall be used for rectifier panel detection status (when the rectifier panel opens).

If motor error status = 0x41 and rectifier panel detection status = 0x42 are operated, no ON (0x30) of operation status (0x80) or write request from ventilation air flow rate setting (0xA0) shall be accepted.

As stated in the table below, this property indicates the range hood-specific errors of EPC = 0x88 “fault status” for device object super class requirements.



© 2000 - 2023 ECHONET Consortium

| Property | EPC = 0x88: Fault status |
|---|---|
| 0x41/0x42/0x40 | Fault status “Fault occurred” |
| 0x43 | Fault status “No fault occurred” |



© 2000 - 2023 ECHONET Consortium

# 3．3 Housing/Facilities-related Device Class Group

This section specifies detailed codes and properties for each ECHONET object belonging to the housing/facilities-related device class group (class group specification code X1 = 0x02). Table 3-3 shows a list of classes specified in detail in this section. In the class requirements, “Mandatory” means that the device mounting each class must mount a combination of its property and service.

**Table 3-3 Housing/Facilities-related Device Class Group Object List**

| Class group code | Class code | Class name | Detailed requirements | Remarks |
|---|---|---|---|---|
| 0x02 | 0x00 to 0x5F | Reserved for future use | | |
| | 0x60 | Electrically operated blind/shade | ○ | |
| | 0x61 | Electrically operated shutter | ○ | |
| | 0x62 | Electrically operated curtain | | |
| | 0x63 | Electrically operated rain sliding door/shutter | ○ | |
| | 0x64 | Electrically operated gate | ○ | |
| | 0x65 | Electrically operated window | ○ | |
| | 0x66 | Automatically operated entrance door/sliding door | ○ | |
| | 0x67 | Garden sprinkler | ○ | |
| | 0x68 | Fire sprinkler | | |
| | 0x69 | Fountain | | |
| | 0x6A | Instantaneous water heater | | |
| | 0x6B | Electric water heater | ○ | |
| | 0x6C | Solar water heater | | |
| | 0x6D | Circulation pump | | |
| | 0x6E | Bidet-equipped toilet (with electrically warmed seat) | ○ | |
| | 0x6F | Electric lock | ○ | |
| | 0x70 | Gas line valve | | |
| | 0x71 | Home sauna | | |
| | 0x72 | Hot water generator | ○ | |
| | 0x73 | Bathroom dryer | ○ | |
| | 0x74 | Home elevator | | |
| | 0x75 | Electrically operated room divider | | |
| | 0x76 | Horizontal transfer | | |
| | 0x77 | Electrically operated clothes-drying pole | | |
| | 0x78 | Septic tank | | |
| | 0x79 | Home solar power generation | ○ | |
| | 0x7A | Cold/hot water heat source equipment | ○ | |



© 2000 - 2023 ECHONET Consortium

| | | | | |
|---|---|---|---|---|
| | 0x7B | Floor heater | ○ | |
| | 0x7C | Fuel cell | ○ | |
| | 0x7D | Storage battery | ○ | |
| | 0x7E | Electric vehicle charger/discharger | ○ | |
| | 0x7F | Engine cogeneration | ○ | |
| | 0x80 | Electric energy meter | ○ | |
| | 0x81 | Water flow meter | ○ | |
| | 0x82 | Gas meter | ○ | |
| | 0x83 | LP gas meter | ○ | |
| | 0x84 | Clock | | |
| | 0x85 | Automatic door | | |
| | 0x86 | Commercial elevator | | |
| | 0x87 | Distribution panel metering | ○ | |
| | 0x88 | Low voltage smart electric energy meter | ○ | |
| | 0x89 | Smart gas meter | ○ | |
| | 0x8A | High voltage smart electric energy meter | ○ | |
| | 0x8B | Kerosene meter | ○ | |
| | 0x8C | Smart kerosene meter | ○ | |
| | 0x8D | Smart electric energy meter for sub-metering | ○ | |
| | 0x8E | Distributed generator's electric energy meter | ○ | |
| | 0x8F | Bidirectional high voltage smart electric energy meter | ○ | |
| | 0x90 (Note 1) | General lighting class | ○ | Including chandelier, stand, bracket, downlight, spotlight, pendant light, ceiling light, wall light, etc. |
| | 0x91 | Single function lighting | ○ | |
| | 0x92 | Lighting for solid light-emitting source class | ○ | |
| | 0x93 to 0x98 (Note 1) | Reserved for future use | | |
| | 0x99 (Note 2) | Emergency lighting | | Including exit light, emergency light, security light, anticrime light, etc. |
| | 0x9A to 0x9C (Note 2) | Reserved for future use | | |
| | 0x9D | Equipment light | | |
| | 0xA0 | Buzzer | ○ | |
| | 0xA1 | Charger for electric vehicle | ○ | |
| | 0xA2 | Household small wind turbine power generation | ○ | |
| | 0xA3 | Lighting system | | |



© 2000 - 2023 ECHONET Consortium

| | | | | |
|---|---|---|---|---|
| | 0xA4 | Extended lighting system | ○ | |
| | 0xA5 | Multiple input PCS | ○ | |
| | 0xA6 | Hybrid water heater | ○ | |
| | 0xA7 | Frequency control | ○ | |
| | 0x9E to 0x9F<br>0xA8 to 0xFF | Reserved for future use | | |

Note: ○ indicates that details are explained including the property structure in the APPENDIX.

Note 1: Before Version 2.10, chandeliers, desk/floor stands, brackets, downlight, spotlights, pendant lights, ceiling lights and wall lights were allocated their own class codes. After Version 2.11, these codes were unified into general lighting fixtures.

Note 2: Before Version 2.10, exit lights, emergency lights, security lights and safety lights were allocated their own class codes. After Version 2.11, these codes were unified into emergency lighting fixtures.



© 2000 - 2023 ECHONET Consortium

# 3．3．1 Requirements for electrically operated blind/shade class

Class group code : 0x02

Class code : 0x60

Instance code : 0x01–0x7F (0x00: All-instance specification code)

| Property name | EPC | Contents of property | Data type | Data size | Unit | Access rule | Man-datory | Announcement at status change | Remark |
|---|---|---|---|---|---|---|---|---|---|
| | | Value range (decimal notation) | | | | | | | |
| Operation status | 0x80 | This property indicates the ON/OFF status. | unsigned char | 1 byte | — | Set | | ○ | |
| | | ON = 0x30, OFF = 0x31 | | | | Get | ○ | | |
| Fault description (Recoverable faults) | 0x89 | Fault description | unsigned short | 2 bytes | – | Get | | ○ | |
| | | Lower order one byte<br>Restarting the device by performing a reset operation = 0x02<br>Higher-order one byte<br>Obstacle caught = 0x04<br>Recovery from outage = 0x05<br>Time out = 0x06<br>Battery low = 0x07<br>0x45 to 0xFF: Defined by user | | | | | | | |
| Timer operation setting | 0x90 | Used to specify the timer operation ON or OFF. | unsigned char | 1 byte | – | Set/Get | | ○ | |
| | | ON = 0x41, OFF = 0x42 | | | | | | | |
| Wind detection status | 0xC2 | This property indicates whether wind is detected. | unsigned char | 1 byte | – | Get | | ○ | |
| | | Wind = 0x41, No wind = 0x42 | | | | | | | |
| Sunlight detection status | 0xC3 | This property indicates whether sunlight is detected. | unsigned char | 1 byte | – | Get | | ○ | |
| | | Sunlight = 0x41, No sunlight = 0x42 | | | | | | | |
| Opening (extension) speed setting | 0xD0 | This property specifies the normal opening (extension) speed by levels. | unsigned char | 1 byte | – | Set/Get | | | |
| | | Low = 0x41, Medium = 0x42, High = 0x43 | | | | | | | |
| Closing (retraction) speed setting | 0xD1 | This property specifies the normal closing (retraction) speed by three levels. | unsigned char | 1 byte | – | Set/Get | | | |
| | | Low = 0x41, Medium = 0x42, High = 0x43 | | | | | | | |
| Operation time | 0xD2 | This property specifies the operation time in seconds. | unsigned char | 1 byte | second | Set/Get | | | |
| | | 0x00–0xFD (0–253 seconds) | | | | | | | |
| Automatic operation setting | 0xD4 | Automatic operation ON or OFF. | unsigned char | 1 byte | – | Set/Get | | ○ | |
| | | ON = 0x41, OFF = 0x42 | | | | | | | |
| Open/close (extension/retraction) setting | 0xE0 | Open/close/stop | unsigned char | 1 byte | – | Set/Get | ○ | ○ | |
| | | Open = 0x41, close = 0x42, stop = 0x43 | | | | | | | |



© 2000 - 2023 ECHONET Consortium

| | | | | | | | | | |
|---|---|---|---|---|---|---|---|---|---|
| Degree-of-opening level | 0xE1 | Used to specify the Degree-of-opening level in %, and to acquire the current setting.<br>0x00–0x64 (0–100%) | unsigned char | 1 byte | – | Set/Get | ○ | | |
| Shade angle setting | 0xE2 | Shade angle value<br>0x00–0xB4 (0–180°) | unsigned char | 1 byte | degree | Set/Get | | | |
| Open/close (extension/retraction) speed setting | 0xE3 | Low/Medium/High<br>Low = 0x41, Medium = 0x42, High = 0x43 | unsigned char | 1 byte | – | Set/Get | | | |
| Electric lock setting | 0xE5 | Lock or unlock of an electric lock<br>Lock = 0x41, Unlock = 0x42 | unsigned char | 1 byte | – | Set/Get | | | |
| Remote operation setting status | 0xE8 | This property indicates whether remote operation is permitted or prohibited.<br>ON (permitted) = 0x41, OFF (prohibited) = 0x42 | unsigned char | 1 byte | – | Get | | ○ | |
| Selective opening (extension) operation setting | 0xE9 | Sets a stop at a specified value.<br>Degree-of-setting position: Open = 0x41<br>Operation time setting value: Open = 0x42<br>Operation time setting value: Close = 0x43<br>Local setting position = 0x44<br>Hereinafter, defined by user<br>(Shortcut to degree-of-opening setting, etc.) | unsigned char | 1 byte | – | Set/Get | | ○ | |
| Open/closed (extended/retracted) status | 0xEA | This property indicates the open/closed status.<br>Fully open = 0x41, Fully closed = 0x42, Opening = 0x43, Closing = 0x44, Stopped halfway = 0x45 | unsigned char | 1 byte | – | Get | | ○ | |
| One-time opening (extension) speed setting | 0xEE | Used to specify the speed of single opening operation by three levels.<br>Low = 0x41, Medium = 0x42, High = 0x43, None = 0x44 | unsigned char | 1 byte | – | Set/Get | | | |
| One-time closing (retraction) speed setting | 0xEF | Used to specify the speed of single closing operation by three levels.<br>Low = 0x41, Medium = 0x42, High = 0x43, None = 0x44 | unsigned char | 1 byte | – | Set/Get | | | |

Note: In the “Announcement at status change” column, ○ denotes mandatory processing when the property is implemented.

(1) Operation status (inherited from the device object super class property)

This property indicates whether an electrically operated blind/shade is ready to accept control commands (ON) or not (OFF). The property value is 0x30 for ON and 0x31 for OFF. If an electrically operated blind/shade ready to accept control commands at the start of a node where the electrically operated blind/shade class is installed, the value can be fixed at 0x30 at installation.

(2) Fault description (inherited from the device object super class property)



© 2000 - 2023 ECHONET Consortium

The description here is limited to what are not defined in the super class. This property acquires the description of recoverable faults about an electrically operated blind/shade up to the detailed fault classification. The general fault classification shall be fixed at the lower-order byte, and 0x02 indicates a fault that can be recovered from by restarting the device by performing a reset operation in the super class classification. The detailed fault classification shall be fixed at the higher-order byte.

Obstacle caught = 0x04, Recovery from outage = 0x05, Time out = 0x06, Battery low = 0x07, 0x45 to 0xFF are defined by the user

(3) Timer operation setting

The property value is 0x41 (ON) to enable timer operation that starts opening or closing at a time preset to the device or 0x42 (OFF) to disable timer operation. Then the contents of the setting are acquired.

(4) Wind detection status

This property indicates whether the wind speed has reached the level preset in the device. The value is 0x41 (Wind) when the level has been reached and 0x42 (No wind) when not.

(5) Sunlight detection status

This property indicates whether the illuminance has reached the level preset in the device. The value is 0x41 (Sunlight) when the level has been reached and 0x42 (No sunlight) when not.

(6) Opening (extension) speed setting

This property specifies the speed in the opening (extension) direction as a repeatedly available value and indicates the speed by three levels (Low/Medium/High).

(7) Closing (retraction) speed setting

This property specifies the speed in the closing (retraction) direction as a repeatedly available value and indicates the speed by three levels (Low/Medium/High).

(8) Operation time

When operation is set by the selective opening (extension) operation setting property (0xE9), this property sets the operation time of an electrically operated blind/shade in seconds and acquires the contents of the setting. The operation time is 0 to 253 seconds (0x00 to 0xFD).

(9) Automatic operation setting

The property value is set to 0x41 (ON) to enable the automatic operation of a device supporting automatic operation or 0x42 (OFF) to disable it. Then the contents of the setting are acquired.



© 2000 - 2023 ECHONET Consortium

(10) Open/close (extension/retraction) operation setting

This property sets the open/close (extension/retraction) or stop operation of an electrically operated blind/shade and acquires the contents of the setting. The property value is 0x41 for open (extension), 0x42 for close (retraction), and 0x43 for stop. The target of operation setting by this property is the fully open position after open (extension) and the fully closed position after close (retraction). For a stop at any other position, stop operation shall be set (0x43) during operation or the selective opening (extension) operation setting property (0xE9) shall be used.

(11) Degree-of-opening

This property sets the degree-of-opening of an electrically operated blind/shade within the range from 0 to 100% and acquires the operation setting when the value of the selective opening (extension) operation setting property (0xE9) is 0x41 (open). The value 0x00 (degree-of-opening: 0%) shall represent the state nearest to the fully closed state (i.e., not fully closed) and the value 0x64 (degree-of-opening: 100%) shall represent the fully open state. During the process of the blind/shade reaching the target position, the target degree-of-opening setting position shall be returned. In the case where an “energy service” or a “home amenity service” is to be supported, the implementation of this property is mandatory.

(12) Shade angle setting

This property indicates the blind angle of an electrically operated blind from the indoor side in degrees.

In the case of a horizontal electric blind, the blind slats shall be regarded as being in the 90° and 0° positions when blind slats are horizontal and at the highest position inside the room (the light blocking side (convex face outward) is vertical), respectively.

In the case of a vertical electric blind, the blind slats shall be regarded as being in the 0° and 180° positions when the outdoor side surfaces of the blind slats are in the rightmost and leftmost positions as seen from the inside, respectively. The blind slats shall be regarded as being in the 90° position when they are at the midpoint between the 0° and 180° positions.

(13) Open/close (extension/retraction) speed setting

This property indicates the open/close (extension/retraction) speed by three levels (Low/Medium/High).

(14) Electric lock setting

This property locks or unlocks an electrically operated blind/shade and acquires the lock status. The property value is 0x41 for the locked status and 0x42 for the unlocked status.

(15) Remote operation setting status

This property acquires whether an electrically operated blind/shade permits or prohibits remote



© 2000 - 2023 ECHONET Consortium

operation from outside. The value is 0x41 (ON) when remote operation from outside is permitted and 0x42 (OFF) when it is prohibited. The value can be fixed at 0x41 (ON) at installation to use an electrically operated blind/shade not independently but always by remote operation.

(16) Selective opening (extension) operation setting

This property indicates the setting to operate or stop an electrically operated blind/shade as specified by another property or device. The property value is 0x41 for operation by “Degree-of-opening level” (0xE1), 0x42 for operation in the opening (extension) direction by “Operation time” (0xD2), 0x43 for operation in the closing (retraction) direction by “Operation time setting value” (0xD2), and 0x44 for stop at a position stored independently by the electrically operated blind/shade. User definition shall be permitted for a stop by opening (extension) level setting using a single signal.

(17) Open/closed (extended/retracted) status

This property acquires the open/closed (extended/retracted) status of an electrically operated blind/shade. In the fully open (extended) status, the blind/shade is stopped at the upper limit and the property value is 0x41. In the fully closed (retracted) status, the blind/shade is stopped at the lower limit and the property value is 0x42. In the opening (extension) operation status, the blind/shade is being operated in the opening (extension) direction and the property value is 0x43. In the closing (retraction) operation status, the blind/shade is being operated in the closing (retraction) direction and the property value is 0x44. When the blind/shade is stopped not at the upper or lower limit but halfway, the property value is 0x45.

(18) One-time opening (extension) speed setting

This property specifies the speed in the opening (extension) direction once only by three levels (Low/Medium/High) and acquires the contents of the setting. The value is 0x41 for low speed, 0x42 for medium speed, 0x43 for high speed, and 0x44 for no setting. After single operation at the speed set by this property, the value changes to 0x44. When the value of this property is 0x44, the operation speed is as set by the opening speed setting property.

(19) One-time closing (retraction) speed setting

This property specifies the speed in the closing (retraction) direction once only by three levels (Low/Medium/High) and acquires the contents of the setting. The value is 0x41 for low speed, 0x42 for medium speed, 0x43 for high speed, and 0x44 for no setting. After single operation at the speed set by this property, the value changes to 0x44. When the value of this property is 0x44, the operation speed is as set by the closing speed setting property.



© 2000 - 2023 ECHONET Consortium

## 3．3．2 Requirements for electrically operated shutter class

Class group code : 0x02

Class code : 0x61

Instance code : 0x01–0x7F (0x00: All-instance specification code)

| Property name | EPC | Contents of property | Data type | Data size | Unit | Access rule | Man-datory | Announcement at status change | Remark |
|---|---|---|---|---|---|---|---|---|---|
| | | Value range (decimal notation) | | | | | | | |
| Operation status | 0x80 | This property indicates the ON/OFF status. | unsigned char | 1 byte | — | Set | | ○ | |
| | | ON = 0x30, OFF = 0x31 | | | | Get | ○ | | |
| Fault description (Recoverable faults) | 0x89 | Fault description | unsigned short | 2 bytes | — | Get | | ○ | |
| | | Lower order one byte<br>Restarting the device by performing a reset operation = 0x02<br>Higher-order one byte<br>Obstacle caught = 0x04<br>Recovery from outage = 0x05<br>Time out = 0x06<br>Battery low = 0x07<br>0x45 to 0xFF: Defined by user | | | | | | | |
| Timer operation setting | 0x90 | Timer operation ON/OFF | unsigned char | 1 byte | — | Set/Get | | ○ | |
| | | ON = 0x41, OFF = 0x42 | | | | | | | |
| Opening speed setting | 0xD0 | Used to specify the normal opening speed by three levels. | unsigned char | 1 byte | — | Set/Get | | | |
| | | Low = 0x41, Medium = 0x42, High = 0x43 | | | | | | | |
| Closing speed setting | 0xD1 | Used to specify the normal closing speed by three levels. | unsigned char | 1 byte | — | Set/Get | | | |
| | | Low = 0x41, Medium = 0x42, High = 0x43 | | | | | | | |
| Operation time | 0xD2 | Used to specify the operation time in seconds. | unsigned char | 1 byte | second | Set/Get | | | |
| | | 0x00 to 0xFD (0 to 253 s) | | | | | | | |
| Open/close operation setting | 0xE0 | Open/Close/Stop | unsigned char | 1 byte | — | Set/Get | ○ | ○ | |
| | | Open = 0x41, Close = 0x42, Stop = 0x43 | | | | | | | |
| Degree-of-opening setting | 0xE1 | Used to specify the degree-of-opening in %. | unsigned char | 1 byte | — | Set/Get | | | |
| | | 0x00–0x64 (0–100%) | | | | | | | |
| Blind angle setting | 0xE2 | Blind angle | unsigned char | 1 byte | degree | Set/Get | | | |
| | | 0x00–0xB4 (0–180°) | | | | | | | |
| Open/close speed setting | 0xE3 | Low/Medium/High | unsigned char | 1 byte | — | Set/Get | | | |
| | | Low = 0x41, Medium = 0x42, High = 0x43 | | | | | | | |
| Electric lock setting | 0xE5 | Locks or unlocks an electric lock | unsigned char | 1 byte | — | Set/Get | | | |
| | | Lock = 0x41, Unlock = 0x42 | | | | | | | |



© 2000 - 2023 ECHONET Consortium

| | | | | | | | | | |
|---|---|---|---|---|---|---|---|---|---|
| Remote operation setting status | 0xE8 | Indicates whether remote operation is permitted or prohibited.<br>ON (permitted) = 0x41<br>OFF (prohibited) = 0x42 | unsigned char | 1 byte | — | Get | | ○ | |
| Selective degree-of-opening setting | 0xE9 | Sets a stop at a specified value.<br>Degree-of-opening setting position: Open = 0x41<br>Operation time setting value: Open = 0x42<br>Operation time setting value: Close = 0x43<br>Local setting position = 0x44<br>Slit degree-of-opening setting = 0x45<br>Hereinafter, defined by user<br>(Shortcut to degree-of-opening setting, etc.) | unsigned char | 1 byte | — | Set/Get | | ○ | |
| Open/closed status | 0xEA | Indicates the open/closed status.<br>Fully open = 0x41, Fully closed = 0x42, Opening = 0x43, Closing = 0x44, Stopped halfway = 0x45 | unsigned char | 1 byte | — | Get | | ○ | |
| Slit degree-of-opening setting | 0xED | Used to specify the degree-of-opening by 8 levels.<br>0x31–0x38 | unsigned char | 1 byte | — | Set/Get | | | |
| One-time opening speed setting | 0xEE | Used to specify the speed of single opening operation by three levels.<br>Low = 0x41, Medium = 0x42, High = 0x43, None = 0x44 | unsigned char | 1 byte | — | Set/Get | | | |
| One-time closing speed setting | 0xEF | Used to specify the speed of single closing operation by three levels.<br>Low = 0x41, Medium = 0x42, High = 0x43, None = 0x44 | unsigned char | 1 byte | — | Set/Get | | | |

Note: In the “Announcement at status change” column, ○ denotes mandatory processing when the property is implemented.

It is recommended that the electrically operated shutter class is used when the shutter is mounted alone, and the electrically operated rain sliding door/shutter class is used when the shutter is mounted with windows, sliding doors, etc.

(1) Operation status (inherited from the device object super class property)

This property indicates whether the electrically operated shutter is in the ON state (i.e. the electric shutter responds to user operation) or OFF state. The property value is 0x30 for ON and 0x31 for OFF. If the installed electrically operated shutter becomes ready to accept control requests at the same time of the node starting, this property may have the fixed value 0x30.

(2) Fault description (inherited from the device object super class property)

The description here is limited to what is not defined in the super class. This property acquires the description of recoverable faults about an electrically operated shutter up to the detailed fault



© 2000 - 2023 ECHONET Consortium

classification. The general fault classification shall be fixed at the lower-order byte, and 0x02 indicates a fault that can be recovered from by restarting the device by performing a reset operation in the super class classification. The detailed fault classification shall be fixed at the higher-order byte.

Obstacle caught = 0x04, Recovery from outage = 0x05, Time out = 0x06, Battery low = 0x07, 0x45 to 0xFF are defined by the user

(3) Timer operation setting

The property value is 0x41 (ON) to enable timer operation that starts opening or closing at a time preset to the device or 0x42 (OFF) to disable timer operation. Then the contents of the setting are acquired.

(4) Opening speed setting

This property specifies the speed in the opening direction as a repeatedly available value and indicates the speed by three levels (Low/Medium/High).

(5) Closing speed setting

This property specifies the speed in the closing direction as a repeatedly available value and indicates the speed by three levels (Low/Medium/High).

(6) Operation time setting value

When operation is set by the selective degree-of-opening setting property (0xE9), this property sets the operation time of an electrically operated shutter in seconds and acquires the contents of the setting. The operation time is 0 to 253 seconds (0x00 to 0xFD).

(7) Open/close operation setting

Used to specify whether to open, close or stop the electrically operated shutter, and to acquire the current setting. 0x41, 0x42 and 0x43 shall be used for the “open,” “close” and “stop” options, respectively. For the purposes of this property, “open” or “close” shall mean fully opening or closing the shutter, respectively. For a stop at any other position, stop operation shall be set (0x43) during operation or the selective degree-of-opening setting property (0xE9) shall be used.

(8) Degree-of-opening level setting

Used, when the value of the selective degree-of-opening setting property (0xE9) indicates 0x41 (open), to specify the extent of opening of the electrically operated shutter by selecting a level within the range from 0 to 100%, and to acquire the current setting. The value 0x00 (degree-of-opening: 0%) shall represent the state nearest to the fully closed state (i.e., not fully closed) and the value 0x64 (degree-of-opening: 100%) shall represent the fully open state. When the shutter reaches the target position, the target of degree-of-opening level shall be returned.



© 2000 - 2023 ECHONET Consortium

(9) Blind angle setting

This property indicates the blind angle (in degrees) of the electrically operated shutter.

In the case of a horizontal blind, the blind slats shall be regarded as being in the 90° and 0° positions when the blind slats are horizontal and when the indoor side surfaces of the blind slats are in the highest position (the light blocking side (convex face outward) is vertical), respectively.

In the case of a vertical blind, the blind slats shall be regarded as being in the 0° and 180° positions when the outdoor side surfaces of the blind slats are in the rightmost and leftmost positions, respectively, as seen from the inside. The blind slats shall be regarded as being in the 90° position when they are at the midpoint between the 0° and 180° positions.

(10) Open/close speed setting

This property indicates the opening and closing speed of the electrically operated shutter at 3 levels: low, medium or high.

(11) Electric lock setting

This property locks or unlocks an electrically operated shutter and acquires the lock status. The property value is 0x41 for the locked status and 0x42 for the unlocked status.

(12) Remote operation setting status

This property acquires whether an electrical shutter permits or prohibits remote operation from outside. The value is 0x41 (ON) when remote operation from outside is permitted and 0x42 (OFF) when it is prohibited. The value may be fixed at 0x41 (ON) at installation to use an electrically operated shutter always by remote operation, not independently.

(13) Selective degree-of-opening setting

This property indicates the setting to operate or stop an electrically operated shutter as specified by another property or device. The property value is 0x41 for operation by “Degree-of-opening setting” (0xE1), 0x42 for operation in the opening direction by “Operation time setting value” (0xD2), 0x43 for operation in the closing direction by “Operation time setting value” (0xD2), 0x44 for stop at a position stored independently by the electrically operated shutter, and 0x45 for slit operation by the slit degree-of-opening setting property (0xED). User definition shall be permitted for a stop by opening level setting using a single signal.

(14) Open/closed status

This property acquires the open/closed status of an electrically operated shutter. In the fully open status, the shutter is stopped at the upper limit and the property value is 0x41. In the fully closed status, the shutter is stopped at the lower limit and the property value is 0x42. When the shutter has a slit, the slit should also be closed. In the opening operation status, the shutter is being



© 2000 - 2023 ECHONET Consortium

operated in the opening direction and the property value is 0x43. In the closing operation status, the shutter is being operated in the closing direction and the property value is 0x44. When the shutter is stopped not at the upper or lower limit but halfway, the property value is 0x45.

(15) Slit degree-of-opening setting

This property indicates the degree of slit opening of a shutter with a slit by 8 levels and acquires the contents of the setting. The status on each level is not defined specifically. However, the property value is 0x31 for the most open status and 0x38 for the most closed status (not fully closed).

(16) One-time opening speed setting

This property specifies the speed in the opening direction once only by three levels (Low/Medium/High) and acquires the contents of the setting. The value is 0x41 for low speed, 0x42 for medium speed, 0x43 for high speed, and 0x44 for no setting. After single operation at the speed set by this property, the value changes to 0x44. When the value of this property is 0x44, the operation speed is as set by the opening speed setting property.

(17) One-time closing speed setting

This property specifies the speed in the closing direction once only by three levels (Low/Medium/High) and acquires the contents of the setting. The value is 0x41 for low speed, 0x42 for medium speed, 0x43 for high speed, and 0x44 for no setting. After single operation at the speed set by this property, the value changes to 0x44. When the value of this property is 0x44, the operation speed is as set by the closing speed setting property.



© 2000 - 2023 ECHONET Consortium

# 3．3．3 Requirements for electrically operated rain sliding door/shutter class

Class group code : 0x02

Class code : 0x63

Instance code : 0x01 to 0x7F (0x00: All-instance specification code)

| Property name | EPC | Contents of property<br>Value range (decimal notation) | Data type | Data size | Unit | Access rule | Mandatory | Announcement at status change | Remark |
|---|---|---|---|---|---|---|---|---|---|
| Operation status | 0x80 | This property indicates the ON/OFF status.<br>ON = 0x30, OFF = 0x31 | unsigned char | 1 byte | — | Set<br>Get | <br>○ | ○ | |
| Fault description<br>(Recoverable faults) | 0x89 | Fault description<br>Lower order one byte<br>Restarting the device by performing a reset operation = 0x02<br>Higher-order one byte<br>Obstacle caught = 0x04<br>Recovery from outage = 0x05<br>Time out = 0x06<br>Battery low = 0x07<br>0x45 to 0xFF: Defined by user | unsigned short | 2 bytes | — | Get | | ○ | |
| Timer operation setting | 0x90 | Turns the timer operation ON or OFF.<br>ON = 0x41, OFF = 0x42 | unsigned char | 1 byte | — | Set/ Get | | ○ | |
| Opening speed setting | 0xD0 | Used to specify the normal opening speed by three levels.<br>Low = 0x41, Medium = 0x42, High = 0x43 | unsigned char | 1 byte | — | Set/ Get | | | |
| Closing speed setting | 0xD1 | Used to specify the normal closing speed by three levels.<br>Low = 0x41, Medium = 0x42, High = 0x43 | unsigned char | 1 byte | — | Set/ Get | | | |
| Operation time setting value | 0xD2 | Used to specify the operation time in seconds.<br>0x00 - 0xFD (0-255 seconds) | unsigned char | 1 byte | second | Set/ Get | | | |
| Open/close operation setting | 0xE0 | Open/Close/Stop<br>Open = 0x41, Close = 0x42, Stop = 0x43 | unsigned char | 1 byte | — | Set/ Get | ○ | ○ | |
| Degree-of-opening setting | 0xE1 | Used to specify the degree-of-opening in %.<br>0x00–0x64 (0–100%) | unsigned char | 1 byte | — | Set/ Get | | | |
| Blind angle setting value | 0xE2 | Blind angle<br>0x00–0xB4 (0–180°) | unsigned char | 1 byte | degree | Set/ Get | | | |
| Opening/closing speed setting | 0xE3 | Low/Medium/High<br>Low = 0x41, Medium = 0x42, High = 0x43 | unsigned char | 1 byte | — | Set/ Get | | | |



© 2000 - 2023 ECHONET Consortium

| | | | | | | | | | |
|---|---|---|---|---|---|---|---|---|---|
| Electric lock setting | 0xE5 | Locks or unlocks an electric lock.<br>Lock = 0x41, Unlock = 0x42 | unsigned char | 1 byte | — | Set/ Get | | | |
| Remote operation setting status | 0xE8 | Indicates whether remote operation is permitted or prohibited.<br>ON (permitted) = 0x41<br>OFF (prohibited) = 0x42 | unsigned char | 1 byte | — | Get | | ○ | |
| Selective degree-of-opening setting | 0xE9 | Sets a stop at a specified value.<br>Degree-of-opening setting position: Open = 0x41<br>Operation time setting value: Open = 0x42<br>Operation time setting value: Close = 0x43<br>Local setting position = 0x44<br>Slit degree-of-opening setting = 0x45<br>Hereinafter, defined by user<br>(Shortcut to degree-of-opening setting, etc.) | unsigned char | 1 byte | — | Set/ Get | | ○ | |
| Open/closed status | 0xEA | Indicates the open/closed status.<br>Fully open = 0x41, Fully closed = 0x42, Opening = 0x43, Closing = 0x44, Stopped halfway = 0x45 | unsigned char | 1 byte | — | Get | | ○ | |
| Slit degree-of-opening setting | 0xED | Used to specify the degree-of-opening by 8 levels.<br>0x31 to 0x38 | unsigned char | 1 byte | — | Set/ Get | | | |
| One-time opening speed setting | 0xEE | Used to specify the speed of single opening operation by three levels.<br>Low = 0x41, Medium = 0x42, High = 0x43, None = 0x44 | unsigned char<br>unsigned char | 1 byte | — | Set/ Get | | | |
| One-time closing speed setting | 0xEF | Used to specify the speed of single closing operation by three levels.<br>Low = 0x41, Medium = 0x42, High = 0x43, None = 0x44 | unsigned char | 1 byte | — | Set/ Get | | | |

Note: In the “Announcement at status change” column, ○ denotes mandatory processing when the property is implemented.

It is recommended that the electrically operated rain sliding door/shutter class is used when the shutter is mounted with windows, sliding doors, etc. and the electrically operated shutter class is used when the shutter is mounted alone.

(1) Operation status (inherited from the super class property)

This property indicates whether the electrically operated rain sliding door/shutter is in the ON state (i.e. the electrically operated rain sliding door/shutter responds to user operation) or OFF state. The property value is 0x30 for ON and 0x31 for OFF.



© 2000 - 2023 ECHONET Consortium

If the installed electrically operated rain sliding door/shutter becomes ready to accept control requests at the same time of the node starting, this property may have the fixed value 0x30.

(2) Fault description (inherited from the device object super class property)

The description here is limited to what is not defined in the super class. This property acquires the description of recoverable faults about an electrically operated rain sliding door/shutter up to the detailed fault classification. The general fault classification shall be fixed at the lower-order byte, and 0x02 indicates a fault that can be recovered from by restarting the device by performing a reset operation in the super class classification. The detailed fault classification shall be fixed at the higher-order byte.

Obstacle caught = 0x04, Recovery from outage = 0x05, Time out = 0x06, Battery low = 0x07, 0x45 to 0xFF are defined by the user

(3) Timer operation setting

The property value is 0x41 (ON) to enable timer operation that starts opening or closing at a time preset to the device or 0x42 (OFF) to disable timer operation. Then the contents of the setting are acquired.

(4) Opening speed setting

This property specifies the speed in the opening direction as a repeatedly available value and indicates the speed by three levels (Low/Medium/High).

(5) Closing speed setting

This property specifies the speed in the closing direction as a repeatedly available value and indicates the speed by three levels (Low/Medium/High).

(6) Operation time setting value

When operation is set by the selective degree-of-opening setting property (0xE9), this property sets the operation time of an electrically operated rain sliding door/shutter in seconds and acquires the contents of the setting. The operation time is 0 to 253 seconds (0x00 to 0xFD).

(7) Open/close operation setting

This property sets the opening/closing or stop operation of an electrically operated rain sliding door/shutter and acquires the contents of the setting. The property value is 0x41 for opening, 0x42 for closing, and 0x43 for stop. The target of operation setting by this property is the fully open position after opening and the fully closed position after closing. For a stop at any other position, stop operation shall be set (0x43) during operation or the selective degree-of-opening setting property (0xE9) shall be used.



© 2000 - 2023 ECHONET Consortium

(8) Degree-of-opening setting

When “Degree-of-opening setting position: Open” (0x41) is set by the selective degree-of-opening property (0xE9), this property sets the degree-of-opening of an electrically operated rain sliding door/shutter within the range from 0 to 100% and acquires the operation result. The property value is 0x00 (Degree-of-opening: 0%) for a status closest to the closed status (not fully closed) and 0x64 (Degree-of-opening: 100%) for a status of the greatest opening (fully open). During the process of reaching the target position, the target of degree-of-opening setting position shall be returned.

(9) Blind angle setting value

This property indicates the blind angle of an electrically operated rain sliding door/shutter from the indoor side in degrees.

In the case of a horizontal blind, the slats are horizontal at 90 degrees and at the highest position inside the room (the light blocking side (convex face outward) is vertical) at 0 degree.

In the case of a vertical blind, the slats outside the room are at the rightmost position at 0 degree when viewed from inside the room, at the leftmost position at 180 degrees, and in the middle between them at 90 degrees.

(10) Opening/closing speed setting

This property indicates the opening/closing speed of an automatically operated rain sliding door/shutter by three levels (Low/Medium/High).

(11) Electric lock setting

This property locks or unlocks an electrically operated rain sliding door/shutter and acquires the lock status. The property value is 0x41 for the locked status and 0x42 for the unlocked status.

(12) Remote operation setting status

This property acquires whether an electrically operated rain sliding door/shutter permits or prohibits remote operation from outside. The value is 0x41 (ON) when remote operation from outside is permitted and 0x42 (OFF) when it is prohibited. The value may be fixed at 0x41 (ON) at installation to use an electrically operated rain sliding door/shutter always by remote operation, not independently.

(13) Selective degree-of-opening setting

This property indicates the setting to operate or stop an electrically operated rain sliding door/shutter as specified by another property or device. The property value is 0x41 for operation by “Degree-of-opening setting” (0xE1), 0x42 for operation in the opening direction by “Operation time setting value” (0xD2), 0x43 for operation in the closing (retraction) direction by “Operation time setting value” (0xD2), 0x44 for stop at a position stored independently by the electrically operated rain sliding door/shutter, and 0x45 for slit operation by the slit degree-of-



© 2000 - 2023 ECHONET Consortium

opening setting property (0xED). User definition shall be permitted for a stop by opening level setting using a single signal.

(14) Open/closed status

This property acquires the open/closed status of an electrically operated rain sliding door/shutter. In the fully open status, the rain sliding door/shutter is stopped at the upper limit and the property value is 0x41. In the fully closed status, the rain sliding door/shutter is stopped at the lower limit and the property value is 0x42. When the rain sliding door/shutter has a slit, the slit should also be closed. In the opening operation status, the rain sliding door/shutter is being operated in the opening direction and the property value is 0x43. In the closing operation status, the rain sliding door/shutter is being operated in the closing direction and the property value is 0x44. When the rain sliding door/shutter is stopped not at the upper or lower limit but halfway, the property value is 0x45.

(15) Slit degree-of-opening setting

This property indicates the degree of slit opening of a rain sliding door/shutter with a slit by 8 levels and acquires the contents of the setting. The status on each level is not defined specifically. However, the property value is 0x31 for the most open status and 0x38 for the most closed status (not fully closed).

(16) One-time opening speed setting

This property specifies the speed in the opening direction once only by three levels (Low/Medium/High) and acquires the contents of the setting. The value is 0x41 for low speed, 0x42 for medium speed, 0x43 for high speed, and 0x44 for no setting. After single operation at the speed set by this property, the value changes to 0x44. When the value of this property is 0x44, the operation speed is as set by the opening speed setting property.

(17) One-time closing speed setting

This property specifies the speed in the closing direction once only and by three levels (Low/Medium/High) and acquires the contents of the setting. The value is 0x41 for low speed, 0x42 for medium speed, 0x43 for high speed, and 0x44 for no setting. After single operation at the speed set by this property, the value changes to 0x44. When the value of this property is 0x44, the operation speed is as set by the closing speed setting property.



© 2000 - 2023 ECHONET Consortium

## 3．3．4 Requirements for electrically operated gate class

Class group code : 0x02

Class code : 0x64

Instance code : 0x01 to 0x7F (0x00: All-instance specification code)

| Property name | EPC | Contents of property<br>Value range (decimal notation) | Data type | Data size | Unit | Access rule | Man-datory | Announce-ment at status change | Remark |
|---|---|---|---|---|---|---|---|---|---|
| Operation status | 0x80 | This property indicates the ON/OFF status.<br>ON = 0x30, OFF = 0x31 | unsigned char | 1 byte | — | Set<br>Get | <br>○ | ○ | |
| Fault description (Recoverable faults) | 0x89 | Fault description<br>Lower order one byte<br>Restarting the device by performing a reset operation = 0x02<br>Higher-order one byte<br>Obstacle caught = 0x04<br>Recovery from outage = 0x05<br>Time out = 0x06<br>Battery low = 0x07<br>0x45 to 0xFF: Defined by user | unsigned short | 2 bytes | | Get | | ○ | |
| Opening speed setting | 0xD0 | Used to specify the normal opening speed by three levels.<br>Low = 0x41, Medium = 0x42, High = 0x43 | unsigned char | 1 byte | | Set/Get | | | |
| Closing speed setting | 0xD1 | Used to specify the normal closing speed by three levels.<br>Low = 0x41, Medium = 0x42, High = 0x43 | unsigned char | 1 byte | | Set/Get | | | |
| Operation time setting value | 0xD2 | Used to specify the operation time in seconds.<br>0x00 to 0xFD (0 to 253 seconds) | unsigned char | 1 byte | | Set/Get | | | |
| Opening/closing operation setting | 0xE0 | Open/Close/Stop<br>Open = 0x41, Close = 0x42, Stop = 0x43 | unsigned char | 1 byte | | Set/Get | ○ | ○ | |
| Degree-of-opening setting | 0xE1 | Used to specify the degree-of-opening in %.<br>0x00 to 0x64 (0 to 100%) | unsigned char | 1 byte | | Set/Get | | | |
| Opening/closing speed setting | 0xE3 | Low/Medium/High<br>Low = 0x41, Medium = 0x42, High = 0x43 | unsigned char | 1 byte | — | Set/Get | | | |
| Electric lock setting | 0xE5 | Locks or unlocks an electric lock.<br>Lock = 0x41, Unlock = 0x42 | unsigned char | 1 byte | — | Set/Get | | | |
| Remote operation | 0xE8 | Indicates whether remote operation is permitted or prohibited. | unsigned | 1 | — | Get | | ○ | |



© 2000 - 2023 ECHONET Consortium

| | | | | | | | | | |
|---|---|---|---|---|---|---|---|---|---|
| setting status | | ON (permitted) = 0x41,<br>OFF (prohibited) = 0x42 | char | byte | | | | | |
| Selective degree-of-opening setting | 0xE9 | Sets a stop at a specified value.<br>Degree-of-opening setting position: Open = 0x41<br>Operation time setting value: Open = 0x42<br>Operation time setting value: Close = 0x43<br>Local setting position = 0x44<br>Hereinafter, defined by user (Shortcut to degree-of-opening setting, etc.) | unsigned char | 1 byte | — | Set/Get | | ○ | |
| Open/closed status | 0xEA | Indicates the open/closed status.<br>Fully open = 0x41, Fully closed = 0x42, Opening = 0x43, Closing = 0x44, Stopped halfway = 0x45 | unsigned char | 2 bytes | — | Get | | ○ | |
| One-time opening speed setting | 0xEE | Used to specify the speed of single opening operation by three levels.<br>Low = 0x41, Medium = 0x42, High = 0x43, None = 0x44 | unsigned char | 1 byte | — | Set/Get | | | |
| One-time closing speed setting | 0xEF | Used to specify the speed of single closing operation by three levels.<br>Low = 0x41, Medium = 0x42, High = 0x43, None = 0x44 | unsigned char | 1 byte | | Set/Get | | | |

Note: In the "Announcement at status change" column, ○ denotes mandatory processing when the property is implemented.

(1) Operation status (inherited from the super class property)

This property indicates whether an electrically operated gate is ready to accept control commands (ON) or not (OFF). The property value is 0x30 for ON and 0x31 for OFF. If the installed electrically operated gate becomes ready to accept control requests at the same time of the node starting, this property may have the fixed value 0x30.

(2) Fault description (inherited from the super class property)

The description here is limited to what is not defined in the super class. This property acquires the description of recoverable faults about an electrically operated gate up to the detailed fault classification. The general fault classification shall be fixed at the lower-order byte, and 0x02 indicates a fault that can be recovered from by restarting the device by performing a reset operation in the super class classification. The detailed fault classification shall be fixed at the higher-order byte. Obstacle caught = 0x04, Recovery from outage = 0x05, Time out = 0x06, Battery low = 0x07, 0x45 to 0xFF are defined by the user

(3) Opening speed setting

This property specifies the speed in the opening direction as a repeatedly available value and indicates



© 2000 - 2023 ECHONET Consortium

the speed by three levels (Low/Medium/High).

(4) Closing speed setting

This property specifies the speed in the closing direction as a repeatedly available value and indicates the speed by three levels (Low/Medium/High).

(5) Operation time setting value

When operation is set by the selective degree-of-opening setting property (0xE9), this property sets the operation time of an electrically operated gate in seconds and acquires the contents of the setting. The operation time is 0 to 253 seconds (0x00 to 0xFD).

(6) Opening/closing operation setting

This property sets the opening/closing or stop operation of an electrically operated gate and acquires the contents of the setting. The property value is 0x41 for opening, 0x42 for closing, and 0x43 for stop. The target of operation setting by this property is the fully open position after opening and the fully closed position after closing. For a stop at any other position, stop operation shall be set (0x43) during operation or the selective opening operation setting property (0xE9) shall be used.

(7) Degree-of-opening setting

When “Degree-of-opening setting position: Open” (0x41) is set by the selective degree-of-opening property (0xE9), this property sets the degree-of-opening of an electrically operated gate within the range from 0 to 100% and acquires the operation result. The property value is 0x00 (Degree-of-opening: 0%) for a status closest to the closed status (not fully closed) and 0x64 (Degree-of-opening: 100%) for a status of the greatest opening (fully open). When the gate reaches the target position, the target degree-of-opening setting position shall be returned.

(8) Opening/closing speed setting

This property indicates the opening/closing speed of an electrically operated gate by three levels (Low/Medium/High).

(9) Electric lock setting

This property locks or unlocks an electrically operated gate and acquires the lock status. The property value is 0x41 for the locked status and 0x42 for the unlocked status.

(10) Remote operation setting status

This property acquires whether an electrically operated gate permits or prohibits remote operation



© 2000 - 2023 ECHONET Consortium

from outside. The value is 0x41 (ON) when remote operation from outside is permitted and 0x42 (OFF) when it is prohibited. The value may be fixed at 0x41 (ON) at installation to use an electrically operated gate always by remote operation, not independently.

(11) Selective degree-of-opening setting

This property indicates the setting to operate or stop an electrically operated gate as specified by another property or device. The property value is 0x41 for operation by “Degree-of-opening setting” (0xE1), 0x42 for operation in the opening direction by “Operation time setting value” (0xD2), 0x43 for operation in the closing direction by “Operation time setting value” (0xD2), and 0x44 for stop at a position stored independently by the electrically operated gate. User definition shall be permitted for a stop by opening level setting using a single signal.

(12) Open/closed status

This property acquires the open/closed status of an electrically operated gate. In the fully open status, the gate is stopped at the upper limit and the property value is 0x41. In the fully closed status, the gate is stopped at the lower limit and the property value is 0x42. In the opening operation status, the gate is being operated in the opening direction and the property value is 0x43. In the closing operation status, the gate is being operated in the closing direction and the property value is 0x44. When the shutter is stopped not at the upper or lower limit but halfway, the property value is 0x45.

(13) One-time opening speed setting

This property specifies the speed in the opening direction once only and by three levels (Low/Medium/High) and acquires the contents of the setting. The value is 0x41 for low speed, 0x42 for medium speed, 0x43 for high speed, and 0x44 for no setting. After single operation at the speed set by this property, the value changes to 0x44. When the value of this property is 0x44, the operation speed is as set by the opening speed setting property.

(14) One-time closing speed setting

This property specifies the speed in the closing direction once only and by three levels (Low/Medium/High) and acquires the contents of the setting. The value is 0x41 for low speed, 0x42 for medium speed, 0x43 for high speed, and 0x44 for no setting. After single operation at the speed set by this property, the value changes to 0x44. When the value of this property is 0x44, the operation speed is as set by the closing speed setting property.



© 2000 - 2023 ECHONET Consortium

## 3．3．5 Requirements for electrically operated window class

Class group code : 0x02

Class code : 0x65

Instance code : 0x01–0x7F (0x00: All-instance specification code)

| Property name | EPC | Contents of property<br>Value range (decimal notation) | Data type | Data size | Unit | Access rule | Man-datory | Announcement at status change | Remark |
|---|---|---|---|---|---|---|---|---|---|
| Operation status | 0x80 | This property indicates the ON/OFF status.<br>ON = 0x30, OFF = 0x31 | unsigned char | 1 byte | – | Set<br>Get | <br>○ | ○ | |
| Fault description<br>(Recoverable faults) | 0x89 | Fault description<br>Lower order one byte<br>Restarting the device by performing a reset operation = 0x02<br>Higher-order one byte<br>Obstacle caught = 0x04<br>Recovery from outage = 0x05<br>Time out = 0x06<br>Battery low = 0x07<br>0x45 to 0xFF: Defined by user | unsigned short | 2 bytes | — | Get | | ○ | |
| Timer operation setting | 0x90 | Turns the timer operation ON or OFF.<br>ON = 0x41, OFF = 0x42 | unsigned char | 1 byte | — | Set/Get | | ○ | |
| Registered temperature detection status | 0xC0 | Indicates the detection of a registered temperature.<br>Registered temperature detected = 0x41<br>Registered temperature not detected = 0x42 | unsigned char | 1 byte | — | Get | | | |
| Rain detection status | 0xC1 | Indicates the detection of rain.<br>Rain detected = 0x41, Rain not detected = 0x42 | unsigned char | 1 byte | — | Get | | | |
| Opening speed setting | 0xD0 | Used to specify the normal opening speed by three levels.<br>Low = 0x41, Medium = 0x42,<br>High = 0x43 | unsigned char | 1 byte | — | Set/Get | | | |
| Closing speed setting | 0xD1 | Used to specify the normal closing speed by three levels.<br>Low = 0x41, Medium = 0x42,<br>High = 0x43 | unsigned char | 1 byte | — | Set/Get | | | |
| Operation time setting value | 0xD2 | Used to specify the operation time in seconds.<br>0x00 to 0xFD (0 to 253 seconds) | unsigned char | 1 byte | second | Set/Get | | | |
| Automatic operation setting | 0xD4 | Turns automatic operation ON or OFF.<br>ON = 0x41, OFF = 0x42 | unsigned char | 1 byte | — | Set/Get | | ○ | |
| Opening/closing operation setting | 0xE0 | Open/Close/Stop<br>Open = 0x41, Close = 0x42,<br>Stop = 0x43 | unsigned char | 1 byte | — | Set/Get | ○ | ○ | |



© 2000 - 2023 ECHONET Consortium

| | | | | | | | | | |
|---|---|---|---|---|---|---|---|---|---|
| Degree-of-opening setting | 0xE1 | Used to specify the degree-of-opening in %.<br>0x00 to 0x64 (0 to 100%) | unsigned char | 1 byte | — | Set/Get | | | |
| Opening/closing speed setting | 0xE3 | Low/Medium/High<br>Low = 0x41, Medium = 0x42, High = 0x43 | unsigned char | 1 byte | — | Set/Get | | | |
| Electric lock setting | 0xE5 | Locks or unlocks an electric lock.<br>Lock = 0x41, Unlock = 0x42 | unsigned char | 1 byte | — | Set/Get | | | |
| Remote operation setting status | 0xE8 | Indicates whether remote operation is permitted or prohibited.<br>ON (permitted) = 0x41,<br>OFF (prohibited) = 0x42 | unsigned char | 1 byte | — | Get | | ○ | |
| Selective degree-of-opening setting | 0xE9 | Sets a stop at a specified value.<br>Degree-of-opening setting position: Open = 0x41<br>Operation time setting value: Open = 0x42<br>Operation time setting value: Close = 0x43<br>Local setting position = 0x44<br>Hereinafter, defined by user (Shortcut to degree-of-opening setting, etc.) | unsigned char | 1 byte | — | Set/Get | | ○ | |
| Open/closed status | 0xEA | Indicates the open/closed status.<br>Fully open = 0x41, Fully closed = 0x42, Opening = 0x43, Closing = 0x44, Stopped halfway = 0x45 | unsigned char | 1 byte | — | Get | | ○ | |
| One-time opening speed setting | 0xEE | Used to specify the speed of single opening operation by three levels.<br>Low = 0x41, Medium = 0x42,<br>High = 0x43, None = 0x44 | unsigned char | 1 byte | — | Set/Get | | | |
| One-time closing speed setting | 0xEF | Used to specify the speed of single closing operation by three levels.<br>Low = 0x41, Medium = 0x42,<br>High = 0x43, None = 0x44 | unsigned char | 1 byte | — | Set/Get | | | |

Note: In the "Announcement at status change" column, ○ denotes mandatory processing when the property is implemented.

(1) Operation status (inherited from the super class property)

This property indicates whether an electrically operated window is ready to accept control commands (ON) or not (OFF). The property value is 0x30 for ON and 0x31 for OFF. If the installed electrically operated window becomes ready to accept control requests at the same time of the node starting, this property may have the fixed value 0x30.

(2) Fault description (inherited from the device object super class property)

The description here is limited to what is not defined in the super class. This property acquires the description of recoverable faults about an electrically operated window up to the detailed fault classification. The general fault classification shall be fixed at the lower-order byte, and 0x02 indicates a fault that can be recovered from by restarting the device by performing a reset operation in the super



© 2000 - 2023 ECHONET Consortium

class classification. The detailed fault classification shall be fixed at the higher-order byte.
Obstacle caught = 0x04, Recovery from outage = 0x05, Time out = 0x06, Battery low = 0x07, 0x45 to 0xFF are defined by the user

(3) Timer operation setting
The property value is 0x41 (ON) to enable timer operation that starts opening or closing at a time preset to the device or 0x42 (OFF) to disable timer operation. Then the contents of the setting are acquired.

(4) Registered temperature detection status
This property indicates whether a preregistered temperature has been reached. The property value is 0x41 when the registered temperature is detected and 0x42 when not.

(5) Rain detection status
This property indicates whether rain has been detected. The property value is 0x41 when rain has been detected and 0x42 when not.

(6) Opening speed setting
This property specifies the speed in the opening direction as a repeatedly available value and indicates the speed by three levels (Low/Medium/High).

(7) Closing speed setting
This property specifies the speed in the closing direction as a repeatedly available value and indicates the speed by three levels (Low/Medium/High).

(8) Operation time setting value
When operation is set by the selective degree-of-opening setting property (0xE9), this property sets the operation time of an electrically operated window in seconds and acquires the contents of the setting. The operation time is 0 to 253 seconds (0x00 to 0xFD).

(9) Automatic operation setting
The property value is set to 0x41 (ON) to enable the automatic operation of a device supporting automatic operation or 0x42 (OFF) to disable it. Then the contents of the setting are acquired.

(10) Opening/closing operation setting
This property sets the opening/closing or stop operation of an electrically operated window and acquires the contents of the setting. The property value is 0x41 for opening, 0x42 for closing, and 0x43



© 2000 - 2023 ECHONET Consortium

for stop. The target of operation setting by this property is the fully open position after opening and the fully closed position after closing. For a stop at any other position, stop operation shall be set (0x43) during operation or the selective opening operation setting property (0xE9) shall be used.

(11) Degree-of-opening setting

When "Degree-of-opening setting position: Open" (0x41) is set by the selective degree-of-opening property (0xE9), this property sets the degree-of-opening of an electrically operated window within the range from 0 to 100% and acquires the operation result. The property value is 0x00 (Degree-of-opening: 0%) for a status closest to the closed status (not fully closed) and 0x64 (Degree-of-opening: 100%) for a status of the greatest opening (fully open). When the window reaches the target position, the target degree-of-opening setting position shall be returned.

(12) Opening/closing speed setting

This property indicates the opening/closing speed of an automatically operated window by three levels (Low/Medium/High).

(13) Electric lock setting

This property locks or unlocks an electrically operated window and acquires the lock status. The property value is 0x41 for the locked status and 0x42 for the unlocked status.

(14) Remote operation setting status

This property acquires whether an electrically operated window permits or prohibits remote operation from outside. The value is 0x41 (ON) when remote operation from outside is permitted and 0x42 (OFF) when it is prohibited. The value may be fixed at 0x41 (ON) at installation to use an electrically operated window always by remote operation, not independently.

(15) Selective degree-of-opening setting

This property indicates the setting to operate or stop an electrically operated window as specified by another property or device. The property value is 0x41 for operation by "Degree-of-opening setting" (0xE1), 0x42 for operation in the opening direction by "Operation time setting value" (0xD2), 0x43 for operation in the closing direction by "Operation time setting value" (0xD2), and 0x44 for stop at a position stored independently by the electrically operated window. User definition shall be permitted for a stop by opening level setting using a single signal.

(16) Open/closed status

This property acquires the open/closed status of an electrically operated window. In the fully open



© 2000 - 2023 ECHONET Consortium

status, the window is stopped at the upper limit and the property value is 0x41. In the fully closed status, the window is stopped at the lower limit and the property value is 0x42. In the opening operation status, the window is being operated in the opening direction and the property value is 0x43. In the closing operation status, the window is being operated in the closing direction and the property value is 0x44. When the window is stopped not at the upper or lower limit but halfway, the property value is 0x45.

(17) One-time opening speed setting

This property specifies the speed in the opening direction once only by three levels (Low/Medium/High) and acquires the contents of the setting. The value is 0x41 for low speed, 0x42 for medium speed, 0x43 for high speed, and 0x44 for no setting. After single operation at the speed set by this property, the value changes to 0x44. When the value of this property is 0x44, the operation speed is as set by the opening speed setting property.

(18) One-time closing speed setting

This property specifies the speed in the closing direction once only by three levels (Low/Medium/High) and acquires the contents of the setting. The value is 0x41 for low speed, 0x42 for medium speed, 0x43 for high speed, and 0x44 for no setting. After single operation at the speed set by this property, the value changes to 0x44. When the value of this property is 0x44, the operation speed is as set by the closing speed setting property.



© 2000 - 2023 ECHONET Consortium

## 3．3．6 Requirements for automatically operated entrance door/sliding door class

Class group code : 0x02

Class code : 0x66

Instance code : 0x01–0x7F (0x00: All-instance specification code)

| Property name | EPC | Contents of property<br>Value range (decimal notation) | Data type | Data size | Unit | Access rule | Man-datory | Announce-ment at status change | Remark |
|---|---|---|---|---|---|---|---|---|---|
| Operation status | 0x80 | This property indicates the ON/OFF status.<br>ON = 0x30, OFF = 0x31 | unsigned char | 1 byte | — | Set<br>Get | <br>○ | ○ | |
| Fault description (Recoverable faults) | 0x89 | Fault description<br>Lower order one byte<br>Restarting the device by performing a reset operation = 0x02<br>Higher-order one byte<br>Obstacle caught = 0x04<br>Recovery from outage = 0x05<br>Time out = 0x06<br>Battery low = 0x07<br>0x45 to 0xFF: Defined by user | unsigned short | 2 bytes | — | Get | | ○ | |
| Opening speed setting | 0xD0 | Used to specify the normal opening speed by three levels.<br>Low = 0x41, Medium = 0x42, High = 0x43 | unsigned char | 1 byte | — | Set/Get | | | |
| Closing speed setting | 0xD1 | Used to specify the normal closing speed by three levels.<br>Low = 0x41, Medium = 0x42, High = 0x43 | unsigned char | 1 byte | — | Set/Get | | | |
| Operation time setting value | 0xD2 | Used to specify the operation time in seconds.<br>0x00 to 0xFD (0 to 253 seconds) | unsigned char | 1 byte | second | Set/Get | | | |
| Opening time setting | 0xD5 | Used to specify the opening time. MM:SS<br>0 to 0x3B:0 to 0x3B (= 0 to 59 minutes):(= 0 to 59 seconds)<br>Released = 0xFFFF | unsigned char × 2 | 2 bytes | — | Set/Get | | ○ | |
| Opening/closing operation setting | 0xE0 | Open/Close/Stop<br>Open = 0x41, Close = 0x42, Stop = 0x43 | unsigned char | 1 byte | — | Set/Get | ○ | ○ | |
| Degree-of-opening setting | 0xE1 | Used to specify the degree-of-opening in %.<br>0x00 to 0x64 (0 to 100%) | unsigned char | 1 byte | — | Set/Get | | | |
| Opening/closin | 0xE3 | Low/Medium/High | unsigned | 1 | — | Set/Get | | | |



© 2000 - 2023 ECHONET Consortium

| | | | | | | | | | |
|---|---|---|---|---|---|---|---|---|---|
| g speed setting | | Low = 0x41, Medium = 0x42, High = 0x43 | char | byte | | | | | |
| Remote operation setting status | 0xE8 | Indicates whether remote operation is permitted or prohibited.<br>ON (permitted) = 0x41,<br>OFF (prohibited) = 0x42 | unsigned char | 1 byte | — | Get | | ○ | |
| Selective degree-of-opening setting | 0xE9 | Sets a stop at a specified value.<br>Degree-of-opening setting position: Open = 0x41<br>Operation time setting value: Open = 0x42<br>Operation time setting value: Close = 0x43<br>Local setting position = 0x44<br>Hereinafter, defined by user (Shortcut to degree-of-opening setting, etc.) | unsigned char | 1 byte | — | Set/Get | | ○ | |
| Open/closed status | 0xEA | Indicates the open/closed status.<br>Fully open = 0x41, Fully closed = 0x42, Opening = 0x43, Closing = 0x44, Stopped halfway = 0x45 | unsigned char | 1 byte | — | Get | | ○ | |
| One-time opening speed setting | 0xEE | Used to specify the speed of single opening operation by three levels.<br>Low = 0x41, Medium = 0x42, High = 0x43, None = 0x44 | unsigned char | 1 byte | — | Set/Get | | | |
| One-time closing speed setting | 0xEF | Used to specify the speed of single closing operation by three levels.<br>Low = 0x41, Medium = 0x42, High = 0x43, None = 0x44 | unsigned char | 1 byte | — | Set/Get | | | |

Note: In the "Announcement at status change" column, ○ denotes mandatory processing when the property is implemented.

(1) Operation status (inherited from the super class property)

This property indicates whether an electrically operated entrance door/sliding door is ready to accept control commands (ON) or not (OFF). The property value is 0x30 for ON and 0x31 for OFF. If the installed electrically operated entrance door/sliding door becomes ready to accept control requests at the same time of the node starting, this property may have the fixed value 0x30.

(2) Fault description (inherited from the super class property)

The description here is limited to what is not defined in the super class. This property acquires the description of recoverable faults about an electrically operated entrance door/sliding door up to the detailed fault classification. The general fault classification shall be fixed at the lower-order byte, and 0x02 indicates a fault that can be recovered from by restarting the device by performing a reset operation in the super class classification. The detailed fault classification shall be fixed at the higher-order byte.

Obstacle caught = 0x04, Recovery from outage = 0x05, Time out = 0x06, Battery low = 0x07, 0x45



© 2000 - 2023 ECHONET Consortium

to 0xFF are defined by the user

(3) Opening speed setting

This property specifies the speed in the opening direction as a repeatedly available value and indicates the speed by three levels (Low/Medium/High).

(4) Closing speed setting

This property specifies the speed in the closing direction as a repeatedly available value and indicates the speed by three levels (Low/Medium/High).

(5) Operation time setting value

When operation is set by the selective degree-of-opening setting property (0xE9), this property sets the operation time of an electrically operated entrance door/sliding door in seconds and acquires the contents of the setting. The operation time is 0 to 253 seconds (0x00 to 0xFD).

(6) Opening time setting

This property sets the opening time for an automatically operated entrance door/sliding door that is closed automatically a certain time after opening and acquires the contents of the setting. The data format is MM: 0x00 to 0x3B (0 to 59 min) and SS: 0x00 to 0x3B (0 to 59 s). The property value for no automatic closing (left open) is 0xFFFF.

(7) Opening/closing operation setting

This property sets the opening/closing or stop operation of an electrically operated entrance door/sliding door and acquires the contents of the setting. The property value is 0x41 for opening, 0x42 for closing, and 0x43 for stop. The target of operation setting by this property is the fully open position after opening and the fully closed position after closing. For a stop at any other position, stop operation shall be set (0x43) during operation or the selective degree-of-opening property (0xE9) shall be used.

(8) Degree-of-opening setting

When “Degree-of-opening setting position: Open” (0x41) is set by the selective degree-of-opening property (0xE9), this property sets the degree-of-opening of an electrically operated entrance door/sliding door within the range from 0 to 100% and acquires the operation result. The property value is 0x00 (Degree-of-opening: 0%) for a status closest to the closed status (not fully closed) and 0x64 (Degree-of-opening: 100%) for a status of the greatest opening (fully open). When the entrance door/sliding door reaches the target position, the target degree-of-opening setting position shall be



© 2000 - 2023 ECHONET Consortium

returned.

(9) Opening/closing speed setting

This property indicates the opening/closing speed of an automatically operated entrance door/sliding door by three levels (Low/Medium/High).

(10) Remote operation setting status

This property acquires whether an electrically operated entrance door/sliding door permits or prohibits remote operation from outside. The value is 0x41 (ON) when remote operation from outside is permitted and 0x42 (OFF) when it is prohibited. The value may be fixed at 0x41 (ON) at installation to use an electrically operated entrance door/sliding door always by remote operation, not independently.

(11) Selective degree-of-opening setting

This property indicates the setting to operate or stop an electrically operated entrance door/sliding door as specified by another property or device. The property value is 0x41 for operation by “Degree-of-opening setting” (0xE1), 0x42 for operation in the opening direction by “Operation time setting value” (0xD2), 0x43 for operation in the closing direction by “Operation time setting value” (0xD2), and 0x44 for stop at a position stored independently by the electrically operated entrance door/sliding door. User definition shall be permitted for a stop by opening level setting using a single signal.

(12) Open/closed status

This property acquires the open/closed status of an electrically operated entrance door/sliding door. In the fully open status, the entrance door/sliding door is stopped at the upper limit and the property value is 0x41. In the fully closed status, the entrance door/sliding door is stopped at the lower limit and the property value is 0x42. In the opening operation status, the entrance door/sliding door is being operated in the opening direction and the property value is 0x43. In the closing operation status, the entrance door/sliding door is being operated in the closing direction and the property value is 0x44. When the entrance door/sliding door is stopped not at the upper or lower limit but halfway, the property value is 0x45.

(13) One-time opening speed setting

This property specifies the speed in the opening direction once only by three levels (Low/Medium/High) and acquires the contents of the setting. The value is 0x41 for low speed, 0x42 for medium speed, 0x43 for high speed, and 0x44 for no setting. After single operation at the speed set by this property, the value changes to 0x44. When the value of this property is 0x44, the operation



© 2000 - 2023 ECHONET Consortium

speed is as set by the opening speed setting property.

(14) One-time closing speed setting

This property specifies the speed in the closing direction once only by three levels (Low/Medium/High) and acquires the contents of the setting. The value is 0x41 for low speed, 0x42 for medium speed, 0x43 for high speed, and 0x44 for no setting. After single operation at the speed set by this property, the value changes to 0x44. When the value of this property is 0x44, the operation speed is as set by the closing speed setting property.



© 2000 - 2023 ECHONET Consortium

## 3．3．7 Requirements for sprinkler (for garden) class

Class group code : 0x02

Class code : 0x67

Instance code : 0x01 to 0x7F (0x00: All-instance specification code)

| Property name | EPC | Contents of property<br>Value range (decimal notation) | Data type | Data size | Unit | Access rule | Man-datory | Announce-ment at status change | Remark |
|---|---|---|---|---|---|---|---|---|---|
| Operation status | 0x80 | This property indicates the ON/OFF status.<br>ON=0x30, OFF=0x31 | unsigned char | 1 byte | － | Set<br>Get | <br>○ | ○ | |
| Sprinkle valve open/close setting | 0xE0 | Open/close of sprinkle valve<br>Automatic ON=0x40 manual ON=0x41, manual OFF=0x42 | unsigned char | 1 byte | － | Set/Get | ○ | | |
| Sprinkle interval setting | 0xE1 | OFF/daily/every other day/every 3 days/once a week<br>0x40/0x41/0x42/0x43/0x44 | unsigned long | 1 byte | － | Set/Get | | | |
| Number of sprinkles setting | 0xE2 | Number of sprinkles in a day (up to 2 times)<br>First ON/second ON/both ON<br>0x41/0x42/0x43 | unsigned char | 1 byte | － | Set/Get | | | |
| Sprinkle time setting 1 | 0xE3 | Set timer value HH:MM and get updated time<br>0–0x17 : 0–0x3B (=0–23) : (=0–59) | unsigned char × 2 | 2 bytes | － | Set/Get | | | |
| Sprinkle time setting 2 | 0xE4 | Set timer value HH:MM and get updated time<br>0–0x17 : 0–0x3B (=0–23) : (=0–59) | unsigned char × 2 | 2 bytes | － | Set/Get | | | |
| Sprinkle duration setting | 0xE5 | Set timer value MM<br>0 to 59 minutes<br>0-0x3B (=0–59) | unsigned char | 1 byte | － | Set/Get | | | |

Note: In the “Announcement at status change” column, ○ denotes mandatory processing when the property is implemented.

(1) Operation status (inherited from the super class property)

This property indicates whether the built-in function of the class is active or not (ON/OFF). For the node equipped with the class, it is possible for the property to be implemented with the fixed value 0x30 (operation status ON) if the function of the class begins to work as the node begins to work,.

(2) Sprinkle valve open/close setting

Sets the electromagnetic valve open/close of a sprinkler and gets open/close status. The 3 settings of automatic ON/manual ON/manual OFF are indicated with 0x40/0x41/0x42. Automatic ON maintains sprinkle valve to be open in the sprinkle the duration (0xE5). Manually open /close of



© 2000 - 2023 ECHONET Consortium

sprinkler electromagnetic valve is set by manual ON or manual OFF.

(3) Sprinkle interval setting

This property indicates sprinkle interval of day (OFF/daily/ every other day/every 3 days/once a week) by 5 steps (0x40/0x41/0x42/0x43/0x44). OFF means no sprinkle.

(4) Number of sprinkles setting

This property indicates the number of sprinkles in a day. The number of sprinkles shall be up to 2 times. ON setting for the first sprinkle and ON setting for the second sprinkle are possible. The 3 steps of first ON/the second ON/the both ON are expressed by 0x41/0x42/0x43. The sprinkle time is set by 0xE3 (the first) and 0xE4 (the second).

(5) Sprinkle time setting 1

This property indicates the sprinkle time setting by hours: 0x00 to 0x17 (0 to 23) and minutes 0x00 to 0x3B (0 to 59). The property value shall begin with the high-order byte in the order of hour, minute.

(6) Sprinkle time setting 2

This property indicates the sprinkle time setting by hours: 0x00 to 0x17 (0 to 23) and minutes 0x00 to 0x3B (0 to 59). The property value shall begin with the high-order byte in the order of hour, minute.

(7) Sprinkle duration setting

This property indicates sprinkle duration and by minutes: 0x00 to 0x3B (0 to 59).

(8) Sprinkle time setting

This property indicates the current time setting by hours: 0x00 to 0x17 (0 to 23) and minutes 0x00 to 0x3B (0 to 59). The property value shall begin with the high-order byte in the order of hour, minute. This property is intended to be used for the purpose of setting the current time corresponds to the time set by ON timer and OFF timer.

(9) Current time setting

This property indicates the current time using by hours: 0x00 to 0x17 (0 to 23) and minutes 0x00 to 0x3B (0 to 59), and to acquire the current setting. The property value shall begin with the high-order byte in the order of hour, minute. This property shall be effective even when the value of operation status property (0x80) is OFF (0x31).



© 2000 - 2023 ECHONET Consortium

## 3．3．8 Requirements for electric water heater class

Class group code : 0x02

Class code : 0x6B

Instance code : 0x01 to 0x7F (0x00: All-instance specification code)

| Property name | EPC | Contents of property<br>Value range (decimal notation) | Data type | Data size | Unit | Access rule | Mandatory | Announcement at status change | Remark |
|---|---|---|---|---|---|---|---|---|---|
| Operation status | 0x80 | This property indicates the ON/OFF status.<br>ON = 0x30, OFF = 0x31 | unsigned char | 1 byte | – | Set<br>Get | <br>○ | ○ | |
| Automatic water heating setting | 0xB0 | Used to specify whether or not to use the automatic water heating function, and to acquire the current setting.<br>Automatic water heating function used: 0x41<br>Non-automatic water heating function stopped: 0x43<br>Non-automatic water heating function used: 0x42 | unsigned char | 1 byte | – | Set/Get | ○ | ○ | |
| Automatic water temperature control setting | 0xB1 | Used to specify whether or not to use the automatic water temperature control function, and to acquire the current setting.<br>Automatic water temperature control function used: 0x41<br>Automatic water temperature control function not used: 0x42 | unsigned char | 1 byte | – | Set/Get | | | |
| Water heater status | 0xB2 | This property indicates the current status of the water heater in terms of whether it is heating water or not.<br>Heating = 0x41<br>Not heating = 0x42 | unsigned char | 1 byte | – | Get | ○ | ○ | |
| Water heating temperature setting | 0xB3 | Used to specify (in °C) the temperature of heated water to be achieved, and to acquire the current setting.<br>0x00 to 0x64 (0 to 100°C) | unsigned char | 1 byte | °C | Set/Get | | | |
| Manual water heating stop days setting | 0xB4 | Used to specify manually the number of days to stop “automatic water heating”.<br>0x00 to 0xFC (= 0 to 252 days)<br>No time limit: 0xFD | unsigned char | 1 byte | day | Set/Get | | | |
| Relative time setting value for manual water heating OFF | 0xB5 | Timer value, HH:MM<br>0x00 to 0x17 : 0x00 to 0x3B<br>(= 0 to 23 hours):(= 0 to 59 minutes) | unsigned char × 2 | 2 bytes | – | Set/Get | | | |
| Tank operation mode setting | 0xB6 | Used to specify the setting of operation mode. | unsigned char | 1 byte | – | Set/Get | | | |



© 2000 - 2023 ECHONET Consortium

| | | | | | | | | | |
|---|---|---|---|---|---|---|---|---|---|
| | | Standard = 0x41<br>Saving = 0x42<br>Extra = 0x43 | | | | | | | |
| Daytime reheating permission setting | 0xC0 | Used to specify whether or not to permit daytime reheating, and to acquire the current setting.<br>Daytime reheating permitted: 0x41<br>Daytime reheating not permitted: 0x42 | unsigned char | 1 byte | – | Set/Get | ○ | | |
| Measured temperature of water in water heater | 0xC1 | This property indicates the current temperature of the water in the water heater.<br>0x00 to 0x64 (0 to 100°C) | unsigned char | 1 byte | °C | Get | | | |
| Alarm status | 0xC2 | This property indicates the status of an alarm.<br>First byte:<br>Bit 0: Out of hot water<br>0 Normal<br>1 Alarm<br>Bit 1: Water leaking<br>0 Normal<br>1 Alarm<br>Bit 2: Water frozen<br>0 Normal<br>1 Alarm<br>Bits 3–7: reserved for future use<br>2nd to 4th byte:<br>reserved for future use | unsigned char × 4 | 4 bytes | – | Get | | ○ | |
| Hot water supply status | 0xC3 | This property indicates the status of supplying hot water.<br>Supplying hot water = 0x41<br>Not supplying hot water = 0x42 | unsigned char | 1 byte | – | Get | ○ | ○ | |
| Relative time setting for keeping bath temperature | 0xC4 | Timer value HH:MM<br>0x00 to 0x17 : 0x00 to 0x3B<br>(= 0 to 23 hours):(= 0 to 59 minutes) | unsigned char × 2 | 2 bytes | – | Set/Get | | | |
| Temperature of supplied water setting | 0xD1 | Used to specify the temperature of water supplied from the water heater in °C, and to acquire the current setting.<br>0x00 to 0x64 (0 to 100°C) | unsigned char | 1 byte | °C | Set/Get | | | |
| Bath water temperature setting | 0xD3 | Used to specify (in °C) the temperature up to which the water heater will heat bath water, and to acquire the current setting.<br>0x00 to 0x64 (0 to 100°C) | unsigned char | 1 byte | °C | Set/Get | | | |
| Hot water volume setting | 0xE0 | Used to specify the target volume of hot water in % relative to tank capacity.<br>0x00 to 0x64 (0 to 100%) | unsigned char | 1 byte | % | Set/Get | | | |
| Measured amount of water remaining in tank | 0xE1 | This property indicates the measured amount of water left in the tank in liters.<br>0x0000 to 0xFFFD (0 to 65533 liters) | unsigned short | 2 bytes | liter | Get | | | |
| Tank capacity | 0xE2 | This property indicates the tank capacity in liters. | unsigned short | 2 bytes | liter | Get | | | |



© 2000 - 2023 ECHONET Consortium

| | | | | | | | | | |
|---|---|---|---|---|---|---|---|---|---|
| | | 0x0000 to 0xFFFD (0 to 65533 liters) | | | | | | | |
| Automatic bath water heating mode setting | 0xE3 | Used to specify whether or not to use the "automatic bath water heating" mode, and to acquire the current setting.<br>"Automatic bath water heating" mode ON = 0x41<br>"Automatic bath water heating" mode OFF = 0x42 | unsigned char | 1 byte | – | Set/Get | Ⓜ | | |
| Bathroom priority setting | 0xE9 | Used to specify whether or not to use the function of "priority bathroom."<br>Priority bath ON = 0x41<br>Priority bath OFF = 0x42 | unsigned char | 1 byte | – | Get | | | |
| Bath operation status monitor | 0xEA | This property indicates the status of bath operation.<br>Filling hot water = 0x41<br>Stopped = 0x42<br>Keeping temperature = 0x43 | unsigned char | 1 byte | – | Get | | ○ | |
| Manual bath reheating operation setting | 0xE4 | Used to specify whether or not to use the function to reheat.<br>Bath reheating ON = 0x41<br>Bath reheating OFF = 0x42 | unsigned char | 1 byte | – | Set/Get | | | |
| Manual bath hot water addition function setting | 0xE5 | Used to specify whether or not to use the function to add hot water to the bath water in the bathtub, and to acquire the current setting.<br>"Addition of hot water" function ON = 0x41<br>"Addition of hot water" function OFF = 0x42 | unsigned char | 1 byte | – | Set/Get | | | |
| Manual lukewarm water temperature lowering function setting | 0xE6 | Used to specify whether or not to use the "lukewarm water temperature lowering" function, and to acquire the current setting.<br>"Lukewarm water temperature lowering" function ON = 0x41<br>"Lukewarm water temperature lowering" function OFF = 0x42 | unsigned char | 1 byte | – | Set/Get | | | |
| Bath water volume setting 1 | 0xE7 | Used to specify the bath water volume in liters, and to acquire the current setting.<br>0x00 to 0xFD (0 to 253 liters) | unsigned char | 1 byte | liter | Set/Get | | | |
| Bath water volume setting 2 | 0xE8 | Used to specify the bath water volume by selecting a level from among the eight predefined levels, and to acquire the current setting.<br>0x31 to 0x38 | unsigned char | 1 byte | – | Set/Get | | | |
| Bath water volume setting 3 | 0xEE | Used to specify the bath water volume in liters, and to acquire the current setting.<br>0x0000 to 0xFFFD (0 to 65533 liters) | unsigned short | 2 bytes | liter | Set/Get | | | |
| Bath water volume setting 4 | 0xD4 | The bath hot water volume is specified by a number of steps.<br>0x01 to 0xFF | unsigned char | 1 byte | – | Set/Get | | | |
| Bath water volume setting 4- Maximum settable level | 0xD5 | The maximum settable level is the top step of Bath water volume setting 4.<br>0x01 to 0xFF | unsigned char | 1 byte | – | Get | | | |



© 2000 - 2023 ECHONET Consortium

| | | | | | | | | | |
|---|---|---|---|---|---|---|---|---|---|
| ON timer reservation setting | 0x90 | Reservation ON/OFF<br>Reservation ON = 0x41<br>Reservation OFF = 0x42 | unsigned char | 1 byte | – | Set/Get | | | |
| ON timer setting | 0x91 | ON timer setting (HH:MM)<br>0 to 0x17 : 0 to 0x3B<br>(= 0 to 23):(= 0 to 59) | unsigned char × 2 | 2 bytes | – | Set/Get | | | |
| Sound volume setting | 0xD6 | Used to set the volume of sound output from the operating units and to acquire the setting status.<br>0x00 to 0x64 (0 to 100) | unsigned char | 1 byte | % | Set/Get | | | |
| Mute setting | 0xD7 | Used to set the volume mute status output from the operating units and to acquire the setting status.<br>Mute ON =0x30, Mute OFF = 0x31 | unsigned char | 1 byte | – | Set/Get | | | |
| Remaining hot water volume | 0xD8 | This property indicates the remaining hot water volume in liters.<br>0x0000 to 0xFFFD (0 to 65533l) | unsigned short | 2 bytes | liter | Get | | | |
| Surplus electric energy prediction value | 0xD9 | Indicates a series of predicted surplus electric energy in every 1-hour, for 24-hours starting from a future time. The byte order is big-endian.<br>1st to 3rd byte: Starting date and time<br>MM : DD : hh<br>4th to 51st byte:<br>Predicted surplus electric energy values in every 1-hour slot<br>(24 slots, 2 bytes each)<br>-327,670 to +327,650<br>The value 0x8000 means no value available. | Month, date, hour<br>unsigned char × 3 + short × 24 | 51 bytes | 10 Wh | Set/Get | | | |
| Rated power consumption of H/P unit in wintertime | 0xDB | This property indicates the rated power consumption of the heat pump in wintertime (December to March)<br>0x0000 to 0xFFFD (0 to 65,533) | unsigned short | 2 bytes | W | Get | | | |
| Rated power consumption of H/P unit in in-between seasons | 0xDC | This property indicates the rated power consumption of the heat pump in in-between seasons (April, May, October, November)<br>0x0000 to 0xFFFD (0 to 65,533) | unsigned short | 2 bytes | W | Get | | | |
| Rated power consumption of H/P unit in summertime | 0xDD | This property indicates the rated power consumption of the heat pump in summertime (June to September)<br>0x0000 to 0xFFFD (0 to 65,533) | unsigned short | 2 bytes | W | Get | | | |
| Participation in energy shift | 0xC7 | This property indicates a response in energy shift. The value is set when a value is determined at participation request and cleared at the heating shift time (0x00).<br>Participation/non-participation (0x01/0x00) | unsigned char | 1 byte | – | Set/ Get | ○ | | Note 2 |
| Standard time to start heating | 0xC8 | Time when daytime heating shift time 1 and daytime heating shift time 2 are determined (only for devices that carry out energy shifts twice). | unsigned char | 1 byte | – | Get | ○ | | Note 2 |



© 2000 - 2023 ECHONET Consortium

| | | | | | | | | | |
|---|---|---|---|---|---|---|---|---|---|
| | | 20:00/21:00/22:00/23:00/24:00/01:00 (0x14, 0x15, 0x16, 0x17, 0x18, 0x01) | | | | | | | |
| Number of energy shifts | 0xC9 | Check the number of energy shifts carried out<br>Once/twice (0x01, 0x02) | unsigned char | 1 byte | — | Get | ○ | | Note 2 |
| Daytime heating shift time 1 | 0xCA | This property indicates "daytime heating shift time" for the first time. The value when there are no settings shall be defined as 0x00.<br>0x09: 9:00, 0x0A: 10:00,<br>0x0B: 11:00, 0x0C: 12:00<br>0x0D: 13:00, 0x0E: 14:00,<br>0x0F: 15:00, 0x10: 16:00<br>0x11: 17:00 (this value is nullified if energy shifts occur twice)<br>0x00: cleared | unsigned char | 1 byte | — | Set/ Get | ○ | | Note 2 |
| Expected electric energy at daytime heating shift time 1 | 0xCB | This property indicates the required electric energies for heating at "daytime heating shift time 1", predicted at "standard time to start heating".<br>This property indicates electric energies in Wh according to shift time, corresponding to these times in sequence: 10:00, 13:00, 15:00, and 17:00.<br>The value is set when a value is determined at a time to determine consumption of electric energy at every shift time and a data at every time is cleared (0x00000000) at the daytime heating shift time 1.<br>0x00000000-0xFFFFFFFD (0-4,294,967,293 W)<br>10:00, 13:00, 15:00, 17:00 | unsigned long x 4 | 16 bytes | Wh | Get | ○ | | Note 2 |
| Consumption of electric energy per hour 1 | 0xCC | This property indicates electric energies that the HP water heater consumes per hour when shifting to "daytime heating shift time 1".<br>The value is set when a value is determined at a time to determine consumption of electric energy at every shift time and a data at every time is cleared (0x0000) at the daytime heating shift time 1.<br>0x0000-0xFFFD<br>(0-65,533 W)<br>When shifting at 10:00, 13:00, 15:00, and 17:00<br>0x0000: cleared | unsigned short x 4 | 8 bytes | Wh | Get | ○ | | Note 2 |
| Daytime heating shift time 2 | 0xCD | This property indicates "daytime heating shift time" for the second time.<br>The value when no setting shall be defined as 0x00. | unsigned char | 1 byte | — | Set/ Get | ○ | | Note 2<br>Note 3 |



© 2000 - 2023 ECHONET Consortium

| | | | | | | | | | |
|---|---|---|---|---|---|---|---|---|---|
| | | 0x0A: 10:00,<br>0x0B: 11:00, 0x0C: 12:00<br>0x0D: 13:00, 0x0E: 14:00,<br>0x0F: 15:00, 0x10: 16:00<br>0x11: 17:00, 0x00: cleared | | | | | | | |
| Expected electric energy at daytime heating shift time 2 | 0xCE | This property indicates the required electric energies for heating at "daytime heating shift time 2", predicted at "standard time to start heating".<br>This property indicates electric energies in Wh according to shift time, corresponding to these times in sequence: 13:00, 15:00, and 17:00.<br>The value is set when a value is determined at a time to determine consumption of electric energy at every shift time and a data at every time is cleared (0x00000000) at the daytime heating shift time 2.<br>0x00000000-0xFFFFFFFD (0-4,294,967,293 W)<br>13:00, 15:00, 17:00 | unsigned long x 3 | 12 bytes | Wh | Get | ○ | | Note 2<br>Note 3 |
| Consumption of electric energy per hour 2 | 0xCF | This property indicates electric energies that the HP water heater consumes per hour when shifting to "daytime heating shift time 2".<br>The value is set when a value is determined at a time to determine consumption of electric energy at every shift time and a data at every time is cleared (0x0000) at the daytime heating shift time 2.<br>0x0000-0xFFFD<br>(0-65,533W)<br>When shifting at 13:00, 15:00, and 17:00<br>0x0000: cleared | unsigned short x 3 | 6 bytes | Wh | Get | ○ | | Note 2<br>Note 3 |

Note 1: In the "Announcement at status change" column, ○ denotes mandatory processing when the property is implemented.

Note 2: Use the device on the assumption that an agreement between service provider and user of devices implementing this class is obtained for energy shift (daytime heating). Note that the standard time to start heating may be determined when establishing a contract.

Note 3: Devices with two energy shifts must implement this function.

This class is intended for use with storage-type electric water heaters (including the heat pump type). For instantaneous water heaters that use fossil fuels such as gases and kerosene, it is recommended that the "Instantaneous water heater" class (Class group code 0x02, Class code 0x72) be used.

When electric water heaters include both the functions of a water heater that has the function of mixing cold water from the water supply mains with hot water that has been heated by means of heat exchange using a heat source (such as an electric heater or heat pump and the like) and stored as hot water, and a bath water heater that has the function of circulating hot or cold water filled in



© 2000 - 2023 ECHONET Consortium

the bathtub while heating by means of heat exchange using the bath heat source unit, or the function of adding stored hot water to the bathtub, these two shall be distinguished by using the terms “water heaters” (or water heating) and “bath water heaters (or bath water heating).”

(1) Operation status (inherited from the device object super class property)

This property indicates whether the function native to this class is operating or not (ON/OFF). In the node mounting this class, if the function of this class is started concurrently with the start of node operation, this property may be implemented at a fixed value of 0x30 (Operation status ON).

(2) Automatic water heating setting

Sets whether the water heating operation in the tank using electric power is performed automatically or not. The automatic water heating function shall be 0x41, the non-automatic water heating function shall be 0x42 and the non-automatic water heating function stopped shall be 0x43.

(3) Automatic water temperature control setting

This property indicates as automatic or non-automatic the temperature value of the electric hot water in the tank depending on the algorithm, etc. Automatic shall be 0x41. Non-automatic shall be 0x42.

(4) Water heater status

This property indicates whether the electric hot water in the tank is presently being heated or not. Presently heating shall be 0x41. Not heating shall be 0x42.

(5) Water heating temperature setting

This property indicates the °C setting value for heating water in the tank. The property value range is 0x00 to 0x64 (0 to 100°C). 0xFD shall be returned when the “Water heating temperature setting” is unknown or not fixed because the “Automatic water temperature control” setting has been specified.

(6) Manual water heating stop days setting

This property sets the number of days until return to “Automatic water heating” (= 0x41) when “Automatic water heating setting” (EPC = 0xB0) is “Manual water heating stop” (= 0x43), and acquires the updated number of days. The setting range is 0x00 to 0xFC (0 to 252 days). When the number of days until return to “Automatic water heating” (= 0x41) is infinite, the property value shall be 0xFD. When the property value of the actual device is higher than the upper limit of the value range, the overflow code 0xFF shall be used. When the property value is lower than the lower limit of the value range, the underflow code 0xFE shall be used. This property is valid only when “Automatic water heating setting” (EPC = 0xB0) is “Manual water heating stop” (= 0x43).



© 2000 - 2023 ECHONET Consortium

(7) Relative time setting value for manual water heating OFF

This property indicates the time when “Automatic water heating setting” (EPC = 0xB0) returns from “Manual water heating” (= 0x42) to “Automatic water heating” (= 0x41) as a relative time and acquires the updated time. The data format is HH: 0x00 to 0x17 (0 to 23) and MM: 0x00 to 0x3B (0 to 59). The property value is HHMM in order from the highest-order byte. This property is valid only when “Automatic water heating setting” (EPC = 0xB0) is “Manual water heating” (= 0x42).

(8) Tank operation mode setting

This property indicates the setting of the operation mode for water heating in the tank. This property is valid only when “Automatic water heating setting” (EPC = 0xB0) is “Automatic water heating: 0x41.” The property value is 0x41 for Standard, 0x42 for Saving, and 0x43 for Extra.

Saving: In this mode, less hot water is available than in Standard mode and the power consumption is smaller.

Extra: In this mode, more hot water is available than in Standard mode and the power consumption is greater.

(9) Daytime reheating permission setting

This property indicates permission/prohibition of the permission setting for daytime reheating of the water in the tank. Daytime reheating permitted shall be 0x41. Daytime reheating prohibited shall be 0x42.

(10) Measured temperature of water in water heater

This property indicates the temperature in °C at the present time of hot water inside the tank. The property value range is 0x00 to 0x64 (0 to 100°C).

(11) Alarm status

Out of hot water

If boiling prohibition is set or the possibility of a hot water shortage is detected during boiling control, this alarm is output.

Water leaking

If a continuous hot water outflow longer than usual daily use is detected, this alarm is output.

Water frozen

If a possibility of freezing inside equipment or external piping is detected, this alarm is output.



© 2000 - 2023 ECHONET Consortium

1st byte:

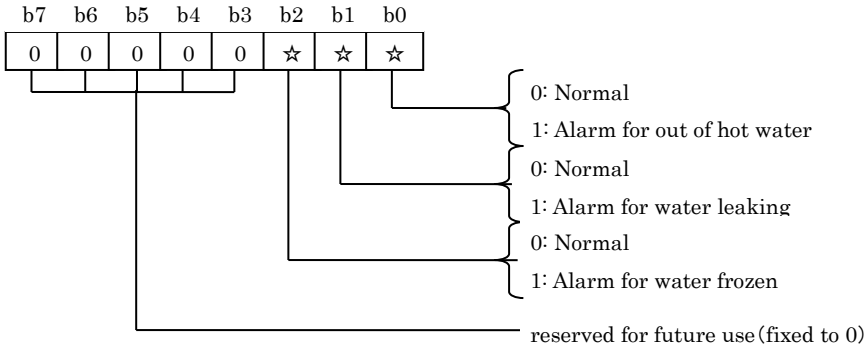


2nd to 4th byte:

reserved for future use (fixed to 0)

| b7 | b6 | b5 | b4 | b3 | b2 | b1 | b0 |
|---|---|---|---|---|---|---|---|
| 0 | 0 | 0 | 0 | 0 | 0 | 0 | 0 |

(12) Hot water supply status

This property indicates whether hot water is supplied from a tap in the kitchen or a shower in the bathroom. The property value is 0x41 for “Supplying hot water” and 0x42 for “Not supplying hot water.” This property does not apply to hot water for a bath.

For “Life watching service,” “Announcement at status change” is mandatory.

(13) Relative time setting for keeping bath temperature

This property sets the hot water keeping time of “Bath operation status monitor” (EPC = 0xEA) as a relative value. The data format is HH: 0x00 to 0x17 (0 to 23) and MM: 0x00 to 0x3B (0 to 59). The property value is HHMM in order from the highest-order byte.

(14) Temperature of supplied water setting

This property indicates the temperature setting in °C for the electric water heater supply to a hot water supply terminal. The property value range is 0x00 to 0x64 (0 to 100°C).

(15) Bath water temperature setting

This property indicates the bath water heating temperature setting in °C. The property value range is 0x00 to 0x64 (0 to 100°C).

This property can double as a property for the bath heat keeping temperature when bath automatic mode is implemented in a water heater.

(16) Hot water volume setting

This property specifies the target volume of hot water in % relative to tank capacity. The



© 2000 - 2023 ECHONET Consortium

property value range is 0x00 to 0x64 (0 to 100%).

(17) Measured amount of water remaining in tank

This property indicates the measured amount of water left in the tank in liters. The property value range is 0x0000 to 0xFFFD (0 to 65,533 liters). When the property value of the actual device is higher than the upper limit of the property value range, the overflow code 0xFFFF shall be used. When the property value is lower than the lower limit of the property value range, the underflow code 0xFFFE shall be used.

(18) Tank capacity

This property indicates the tank capacity in liters. The property value range is 0x0000 to 0xFFFD (0 to 65533 liters). When the property value of the actual device is higher than the upper limit of the property value range, the overflow code 0xFFFF shall be used. When the property value is lower than the lower limit of the property value range, the underflow code 0xFFFE shall be used

(19) Automatic bath water heating mode setting

This property indicates whether the bath automatic mode is ON or OFF. The property value shall be 0x41 (bath automatic mode ON) or 0x42 (bath automatic mode OFF). In the case where a “mobile service” is to be supported, the implementation of this property is mandatory.

Because of specification differences between water heaters, the definition of bath automatic operation mode shall depend on the implementation. In general, the mode refers to a series of operations of “supplying hot water, adding hot water, reheating, and keeping bath temperature” or “unplugging (draining), washing, plugging, supplying hot water, adding hot water, reheating, and keeping bath temperature.”

(20) Bathroom priority setting

This property indicates whether a water heater is controlled or operated with priority to bath. The property value is 0x41 for Priority to bath ON and 0x42 for Priority to bath OFF. For safety, only Get shall be supported. The contents of priority shall depend on the implementation.

Example of device implementation: When Priority to bath is ON, the temperature of hot water can be changed only from the remote controller in the bathroom. It is prohibited to use the water temperature from any other remote controller or HEMS.

(21) Bath operation status monitor

This property monitors the status of a bath tub in bath automatic mode.

When bath automatic mode is set (ON: 0x41), the bath tub status is monitored. The property value is 0x41 for “Filling hot water,” 0x43 for “Keeping temperature,” and 0x42 for “Stopped.”



© 2000 - 2023 ECHONET Consortium

This property indicates the value of "Automatic bath water heating mode setting (EPC=0xE3)" is Automatic ON (0x41).

Filling hot water (0x41): Including reheating up to the target temperature after filling

Keeping temperature (0x43): Including water adding and reheating while keeping the temperature

Bath operation status monitor indicates "Stopped" when bath automatic mode is set to OFF.

(22) Manual bath reheating operation setting

This property indicates whether bath reheating is ON or OFF. The property value is 0x41 for "Bath reheating ON" and 0x42 for "Bath reheating OFF."

(23) Manual bath hot water addition function setting

This property indicates whether the bath hot water adding operation is ON or OFF. The property value shall be 0x41 (bath hot water adding operation ON) or 0x42 (bath hot water adding operation OFF).

(24) Manual Lukewarm water temperature lowering function setting

This property indicates whether the bath hot water temperature lowering operation is ON or OFF. The value 0x41 indicates that the bath hot water temperature lowering operation is ON. The value 0x42 indicates that the bath hot water temperature lowering operation is OFF. When the bath hot water temperature lowering operation is ON, water will be added to the bath to lower the bath hot water temperature.

(22) "Manual bath reheating operation setting," (23) "Manual bath hot water addition function setting," and (24) "Manual Lukewarm water temperature lowering function setting" are possible, irrespective of (19) "Automatic bath water heating mode setting," except when the bath is being filled with hot water.

(25) Bath water volume setting 1

This property indicates the bath hot water volume in liters. The property value range is 0x00 to 0xFD (0 to 253 L). When the property value of the actual device is higher than the property value range, the overflow code 0xFF shall be used. When the property value is lower than the property value range, the underflow code 0xFE shall be used.

(26) Bath water volume setting 2

Sets the bath hot water volume. Eight different levels are available. The values 0x31 and 0x38 represent the minimum and maximum settings, respectively. Specific volume values for the eight different levels are not stipulated.

(27) Bath water volume setting 3



© 2000 - 2023 ECHONET Consortium

Used to specify the bath water volume in liters, and to acquire the current setting. The property value range is 0x0000 to 0xFFFD (0 to 65533 liters). When the property value of the actual device is higher than the upper limit of the property value range, the overflow code 0xFFFF shall be used. When the property value is lower than the lower limit of the property value range, the underflow code 0xFFFE shall be used.

(28) Bath water volume setting 4

This property sets the bath water volume. The minimum value is 0x01 and the maximum value is "Bath water volume setting 4 - Maximum settable level." No actual value is specified for each level. This property is related to "Bath water volume setting 4 - Maximum settable level."

(29) Bath water volume setting 4 - Maximum settable level

This property indicates the maximum settable level of Bath water volume setting 4. The minimum value is 0x01 and the maximum value is 0xFF. No actual value is specified for each level. This property is related to "Bath water volume setting 4."

(30) Rated power consumption of H/P unit in wintertime

This property indicates the rated power consumption of the heat pump in wintertime (to supply hot water at 65°C and water at 9°C) in watts. The property value range is 0x0000 to 0xFFFD (0 to 65,533). When the property value of the actual device is higher than the upper limit of the value range, 0xFFFF (overflow code) shall be used. When the property value of the actual device is lower than the lower limit of the value range, 0xFFFE (underflow code) shall be used.

(31) Rated power consumption of H/P unit in in-between seasons

This property indicates the rated power consumption of the heat pump in in-between seasons (to supply hot water at 65°C and water at 17°C) in watts. The property value range is 0x0000 to 0xFFFD (0 to 65,533). When the property value of the actual device is higher than the upper limit of the value range, 0xFFFF (overflow code) shall be used. When the property value of the actual device is lower than the lower limit of the value range, 0xFFFE (underflow code) shall be used.

(32) Rated power consumption of H/P unit in summertime

This property indicates the rated power consumption of the heat pump in summertime (to supply hot water at 65°C and water at 24°C) in watts. The property value range is 0x0000 to 0xFFFD (0 to 65533). When the property value of the actual device is higher than the upper limit of the value range, 0xFFFF (overflow code) shall be used. When the property value of the actual device is lower than the lower limit of the value range, 0xFFFE (underflow code) shall be used.

(33) ON timer reservation setting



© 2000 - 2023 ECHONET Consortium

This property indicates whether the bath automatic mode reservation is ON or OFF. The property value shall be 0x41 (reservation ON) or 0x42 (reservation OFF). This property is related to the “Set value of ON timer time”.

(34) ON timer setting

When the “ON timer reservation setting” is ON, this property indicates the time at which the bath automatic mode setting (EPC = 0xE3) turns ON (0x41). The time is indicated in hours and minutes (hour: 0x00 to 0x17 (0 to 23); minute: 0x00 to 0x3B (0 to 59)). The property value shall sequentially indicate the hour and minute, beginning with the high-order byte.

(35) Sound volume setting

“Set” of this property is used to set the volume of operating sounds, voice guidance, notification melodies, interphone and others output from remote controllers and other operating units, etc.

“Get” of this property is used to acquire the value of the current volume setting.

This property indicates the volume value by percentage. The value is 0 (0x00) for the minimum volume and 100 (0x64) for the maximum volume of each device.

(36) Mute setting

“Set” of this property is used to set the volume mute output from operating units ON and OFF.

“Get” of this property is used to acquire the value of the current mute status.

Mute ON indicates that voice is not output, mute OFF indicates that voice is output.

Property values 0x30 and 0x31 correspond to mute ON and OFF, respectively.

The correlation between the “mute setting” property and the “volume setting” property shall depend on implementation.

(Example 1: If the value of the volume setting property is 20 when the mute function is OFF, the value of the volume setting property remains unchanged at 20 even after the mute function is turned ON. On the other hand, when the mute function is ON, the value of the volume setting property may be 0 in some cases.)

(Example 2: If the value of the volume setting property is 20 when the mute function is OFF, the value of the volume setting property remains 20 even after the mute function is turned from OFF to ON and back to OFF. On the other hand, the value of the volume setting property may be 0.)

(37) Remaining hot water volume

This property indicates, in units of liters, the volume of hot water that can be supplied by an electric water heater to a tap in the kitchen, a shower in the bathroom or other hot water outlet. The property value range is 0x0000 to 0xFFFD (0 to 65,533 liters). If the property values of actual devices exceed the property value range, the overflow code 0xFFFF shall be used. If the property values of actual devices are lower than the lower limit of the property value range, the underflow code 0xFFFE shall be used.



© 2000 - 2023 ECHONET Consortium

(38) Surplus electric energy prediction value

The “Surplus electric energy prediction value” is the value obtained upon subtracting the predicted electric energy consumption from the predicted electric energy generation amount of an electric power system to which an electric water heater is connected, and indicates a future 24-hour period, including the time that serves as a base point, in units of one hour in time series, beginning with the high-order byte.

The predicted electric energy consumption of an electric water heater that is subject to control is not included.

If there are multiple electric water heaters, there is to be only one electric water heater that is subject to control, which can be set in the controller instance.

Although the time at which to set the surplus electric energy prediction value is not specified, it is recommended for the value to be set before nighttime for night devices.

(39) Participation in energy shift

The controller shall set a response to energy shift for the following day, until time to determine participation request.

Participation/non-participation (0x01/0x00)

Values other than the above are nullified (deemed as 0x00) and not participate in energy shift.

HP water heater shall incorporate and fix values of this property at the time of determining participation request. Values incorporated after the time above are nullified and not to be carried out. The values of this property shall be set as “non-participation: 0x00” to daytime heating shift time 1 (devices with an energy shift) or daytime heating shift time 2 (devices with two energy shifts).

In cases where daytime heating shift time 1 (devices with an energy shift) or daytime heating shift time 2 (devices with two energy shifts) is set, energy shift participation property cannot be changed from the time to determine participation request to the daytime heating shift time 1 (devices with an energy shift), or during the daytime heating shift time 2 (devices with two energy shifts).

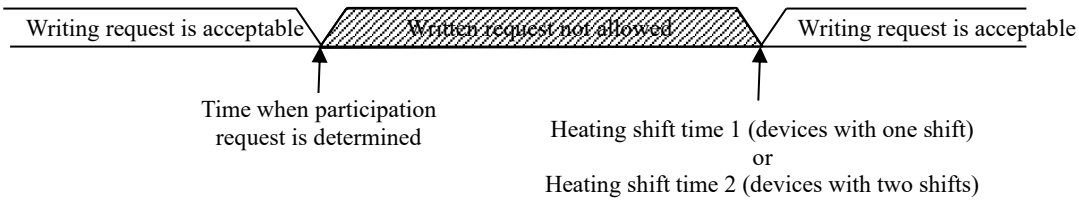


Can participate in energy shifts only when automatic heating setting is set to “automatic”.

This property shall be changed to “non-participation” when the heating automatic setting property is set



© 2000 - 2023 ECHONET Consortium

to “manual” or “manual stop”, when the energy shift participation status property is set to “participation”.

| Event \ Status | | Period that writing request is unacceptable | |
|---|---|---|---|
| | | Participation (0x01) | Non-Participation (0x00) |
| Heating Automatic setting | Automatic | Participation (energy shift) | Non-participation (automatic) |
| | Heating (manual) | Non-participation (manual heating) | Non-participation (manual heating) |
| | Heating manual stop | Non-participation (heating manual stop) | Non-participation (heating manual stop) |

Also refer the detailed sequence described in the application communication interface specifications.
Note: The device operates as a nighttime heat accumulator as usual when it is not participating in energy shifts.

(40) Standard time to start heating

HP water heaters shall return to the standard time to start heating determined at the time of the energy shift contract established between the service provider and user.
The time to return shall be each of the following hours on the hour between 20:00 and 1:00:
20:00, 21:00, 22:00, 23:00, 24:00, 01:00 (0x14, 0x15, 0x16, 0x17, 0x18, 0x01)
Values other than the above are nullified and not implement heating shift.
Also refer the detailed sequence described in application communication interface specification.
This property setting has no meaning if energy shift participation status is set to “non-participation”.

(41) Number of energy shifts

Returns the number of energy shift times (daytime heating) that the device carries out.
The number of energy shifts shall be either one or two.
Also refer the detailed sequence described in application communication interface specification.
This property setting has no meaning if energy shift participation status is set to “non-participation”.

(42) Daytime heating shift time 1 (D1 of Fig. 3-4~~Fig. 3-4~~ and D1 of Fig. 3-5~~Fig. 3-5~~)

Daytime heating shift time 1 is set for HP water heaters when energy shift participation status property is set to participation (0x01). Set value is nullified in case of non-participation (0x00), so that HP water heaters shall not carry out an energy shift.
Property values shall be any one of the following:
No energy shift (daytime heating) shall be carried out when any value other than the ones below is designated.

0x09: 9:00, 0x0A: 10:00, 0x0B: 11:00, 0x0C: 12:00



© 2000 - 2023 ECHONET Consortium

0x0D: 13:00, 0x0E: 14:00, 0x0F: 15:00, 0x10: 16:00

0x11: 17:00 (this value is nullified if number of energy shift is 2)

HEMS controller writes a value of this property after the time to fix the standard time to start heating, while HP water heater takes and fixes a value of this property to the standard time to start heating. HP water heater clears value of this property (0x00) set to the daytime heating shift time 1.

Values incorporated after the time above are nullified and not to be carried out.

No energy shift is carried out if a time other than the one above is written.

This property shall be cleared (0x00) when heating automatic setting property is set to “manual” or “manual stop”, when energy shift participation status property is set to “participation”.

Also refer the detailed sequence described in application communication interface specification.

This property setting has no meaning if energy shift participation status is set to “non-participation”.

(43) Expected electric energy at daytime heating shift time 1 (C1 of Fig. 3-4~~Fig. 3-4~~ and C1 of Fig. 3-5~~Fig. 3-5~~)

Expected electric energy required for heating at every time indicated as daytime heating shift time 1 shall be indicated in Wh. The value is sorted in order of 10:00, 13:00, 15:00, and 17:00.

The property value range at every shift time shall be 0x00000000 to 0xFFFFFFFD (0 to 4,294,967,293W). When the property value of the actual device exceeds this property value range, the overflow code 0xFFFFFFFF shall be used. When said value falls below the property value range, the underflow code 0xFFFFFFFE shall be used.

The value is set when a value is determined at a time to determine consumption power at every shift time and four values of this property are cleared (0x00000000) at the daytime heating shift time 1.

This property shall be cleared (0x00000000) in a similar manner when heating automatic setting property is set to “manual” or “manual stop”, when energy shift participation status property is set to “participation”.

Also refer the detailed sequence described in application communication interface specification.

This property setting has no meaning if energy shift participation status is set to “non-participation”.

(44) Consumption of electric energy per hour 1

This property indicates electric energies that the HP heater consumes per hour when shifting to “daytime heating shift time 1”. The value is sorted in order of 10:00, 13:00, 15:00, and 17:00.

The property value range at every shift time shall be 0x0000 to 0xFFFD (0 to 65,533W). When the property value of the actual device exceeds this property value range, the overflow code 0xFFFF shall be used. When said value falls below the property value range, the underflow code 0xFFFE shall be used.

The value is set when a value is determined at a time to determine consumption of energy at every



© 2000 - 2023 ECHONET Consortium

shift time and cleared (0x0000) at the daytime heating shift time 1.

The four values of this property shall be cleared (0x0000) when heating automatic setting property is set to “manual” or “manual stop”, when energy shift participation status property is set to “participation”.

Also refer the detailed sequence described in application communication interface specification.

This property setting has no meaning if energy shift participation status is set to “non-participation”.

(45) Daytime heating shift time 2 (D2 of Fig. 3-4~~Fig. 3-4~~ and D2 of Fig. 3-5~~Fig. 3-5~~)

Daytime heating shift time 2 is set for HP water heater, when energy shift participation status property is participation (0x01). Set value is nullified in case of non-participation (0x00), so that HP water heater shall not carry out an energy shift.

The time shall be later than the daytime heating shift time 1. Daytime heating shift shall not be carried out when values other than the designated ones or times earlier than or equivalent to the daytime heating shift time 1 are designated.

It is recommended that about three hours are secured between daytime heating shift time 2 and daytime heating shift time 1.

(Note that the HP water heater requires a few hours to complete the energy shift process starting from the time designated as daytime heating shift time 1. Therefore, when daytime heating shift time 2 is set in the vicinity of the daytime heating shift time 1, the process at the daytime heating shift time 1 is suspended and energy shift may not reach the predetermined volume.)

0x0A: 10:00, 0x0B: 11:00, 0x0C: 12:00, 0x0D: 13:00

0x0E: 14:00, 0x0F: 15:00, 0x10: 16:00, 0x11: 17:00

HEMS controller writes a value of this property after the time to fix the standard time to start heating, while HP water heater takes and fixes a value of this property to the standard time to start heating. HP water heater clears value of this property (0x00) set to the daytime heating shift time 2.

Values incorporated after the time above are nullified and not to be carried out.

No energy shift is carried out if time other than the above is written, either.

This property shall be cleared (0x00) when heating automatic setting property is set to “manual” or “manual stop”, when energy shift participation property is set to “participation”. The property is cleared to daytime heating shift time 2 (0x00).

Also refer the detailed sequence described in application communication interface specification.

This property setting has no meaning if energy shift participation status is set to “non-participation”.

(46) Expected electric energy at daytime heating shift time 2 (C2 of Fig. 3-5~~Fig. 3-5~~)

Expected electric energy required for heating in every time indicated as daytime heating shift time 2 shall be indicated in Wh. The value is sorted in order of 13:00, 15:00, and 17:00.



© 2000 - 2023 ECHONET Consortium

The property value range at every shift time shall be 0x00000000 to 0xFFFFFFFD (0 to 4,294,967,293W). When the property value of the actual device exceeds this property value range, the overflow code 0xFFFFFFFF shall be used. When said value falls below the property value range, the underflow code 0xFFFFFFFE shall be used.

The value is set at a time to determine consumption power at every shift time, and cleared (0x00000000) at the daytime heating shift time 2.

The three values (for 13:00, 15:00, and 17:00) of this property shall be cleared (0x00000000) when heating automatic setting property is set to “manual” or “manual stop”, when energy shift participation status property is set to “participation”.

Also refer the detailed sequence described in application communication interface specification.

This property setting has no meaning, if energy shift participation status is in a state of “non-participation”.

(47) Consumption of electric energy per hour 2

This property indicates electric energies that the HP heater consumes per hour when shifting to “daytime heating shift time 2”. The value is sorted in order of 13:00, 15:00, and 17:00 at every shift time 2.

The property value range at every shift time shall be 0x0000 to 0xFFFD (0 to 65,533W). When the property value of the actual device exceeds this property value range, the overflow code 0xFFFF shall be used. When said value falls below the property value range, the underflow code 0xFFFE shall be used.

The value is set when a value is determined at a time to determine consumption of electric energy at every shift time and the three values of this property are cleared (0x0000) at the daytime heating shift time 2.

This property shall be cleared (0x0000) in a similar manner when heating automatic setting property is set to “manual” or “manual stop”, when energy shift participation property is set to “participation”.

Also refer the detailed sequence described in application communication interface specification.

This property setting has no meaning if energy shift participation status is set to “non-participation”.



© 2000 - 2023 ECHONET Consortium

(Ex.) When shifting heating to α hour later or α hour(s) later.

(1) Heat hot water (B) to be used during α time, to be shifted by the time midnight power service is complete.

(2) Heated hot water (C) needs to satisfy the daily volume of hot water after time α.

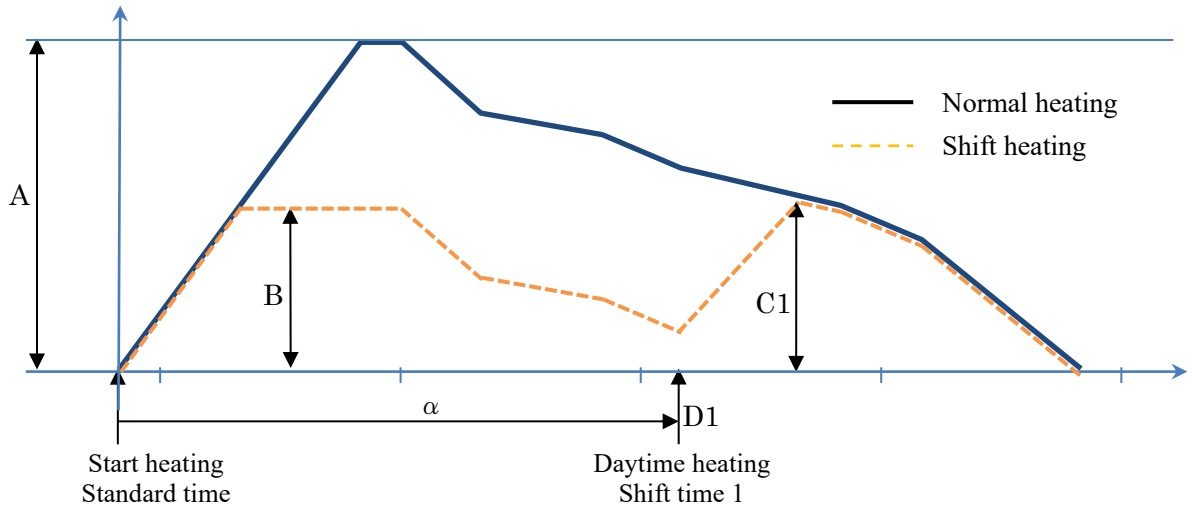


A: Tomorrow's total volume of hot water expected at the standard time to start heating
B: Hot water to be used during time α to be shifted
C1: Volume of hot water needed from the time that heating is completed (after starting heating after time α) to the standard time to start heating
D1: Time to carry out daytime heating 1 (daytime heating shift time 1)
α: Time to shift heating

Energy to heat hot water (C) = Electrical power can be shifted
Hot water (A) = hot water (B) + hot water (C)

Fig. 3-4 Time to start accumulating hot water shift (daytime single shift)



© 2000 - 2023 ECHONET Consortium

(Ex.) When shifting heating to α hour later or α 2 hours later.

(1) Heat hot water (B) to be used during α1 time, to be shifted by the time midnight power service is complete.

(2) Heat hot water (C) and (C2) needs to satisfy daily volume of hot water twice (after time α1 and α2).

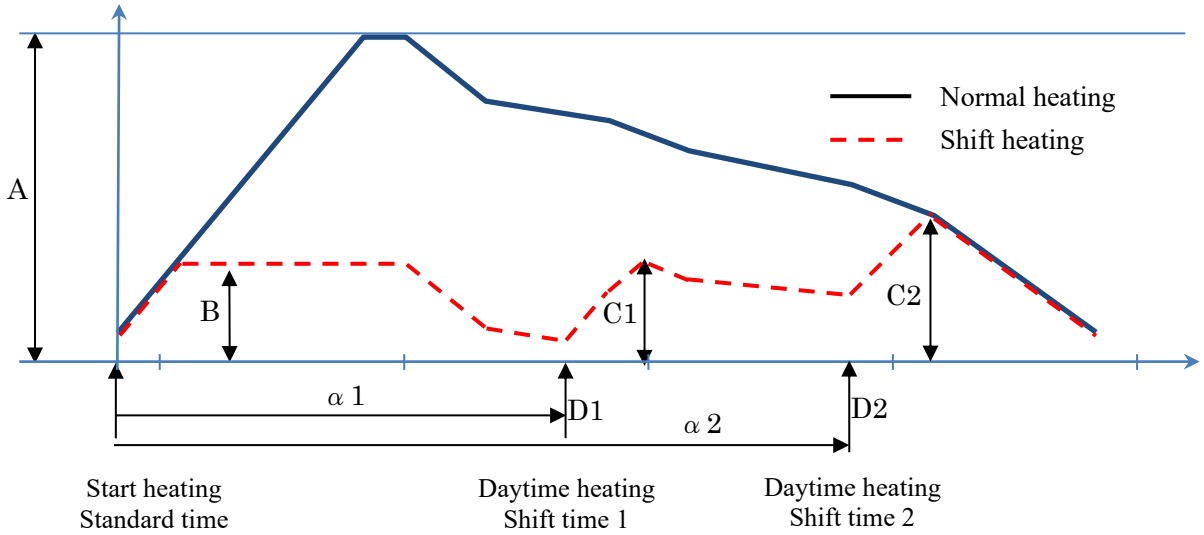


A: Tomorrow's total volume of hot water expected at the standard time to start heating
B: Hot water to be used during time α1 to be shifted
C1+C2: Volume of hot water needed by the standard time to start heating (after completing heating after time α1 shift and α2 shift)
D1: Time to carry out daytime heating 1 (daytime heating shift time 1)
D2: Time to carry out daytime heating 2 (daytime heating shift time 2)
α1: Time to shift heating
α2: Time to shift heating

Energy to heat hot water (C1) ＋ hot water (C2) ＝ Electrical power can be shifted
Hot water (A) = hot water (B) ＋ hot water (C1) ＋ hot water (C2)

Fig. 3-5 Time to start accumulating hot water shift (daytime double shift)



© 2000 - 2023 ECHONET Consortium

## 3．3．9 Requirement for electric toilet seat (warm-water washing toilet seat, heating toilet seat, etc.) class

Class group code : 0x02

Class code : 0x6E

Instance code : 0x01-0x7F (0x00: All-instance specification code)

| Property name | EPC | Contents of property<br>Value range (decimal notation) | Data type | Data size | Unit | Access rule | Man-datory | Announce-ment at status change | Remark |
|---|---|---|---|---|---|---|---|---|---|
| Operation status | 0x80 | This property indicates the ON/OFF status.<br>ON=0x30, OFF=0x31 | unsigned char | 1 byte | — | Set<br>Get | <br>○ | ○ | |
| Temperature level of toilet seat | 0xE0 | Low to high temperature (10 steps) 0x31 for the lowest level, 0x3A for the highest level.<br>0x31 to 0x3A | unsigned char | 1 byte | — | Set/Get | | | |
| Heater setting of toilet seat | 0xE1 | ON/OFF<br>ON=0x41, OFF=0x42 | unsigned char | 1 byte | – | Set/Get | ○ | | |
| Temporal halt setting of toilet seat | 0xE2 | Continuous setting/one time setting/no setting.<br>Continuous setting=0x41, one time setting=0x42, no setting=0x43 | unsigned char | 1 byte | – | Set/Get | | | |
| Temporal halt start time of toilet seat | 0xE3 | Temporal halt start time of toilet seat timer value: HH:MM<br>0–0x17 : 0–0x3B<br>(=0–23) : (=0–59) | unsigned char × 2 | 2 bytes | – | Set/Get | | | |
| Temporal halt time duration of toilet seat | 0xE4 | Temporal stop time duration of toilet seat timer value: HH:MM<br>0–0x17 : 0–0x3B<br>(=0–23) : (=0–59) | unsigned char × 2 | 2 bytes | – | Set/Get | | | |
| Temperature level setting of room heating | 0xE5 | Low/medium/high temperature<br>0x31/0x32/0x33 | unsigned char | 1 byte | – | Set/Get | | | |
| Room heating setting | 0xE6 | Room heating ON/room heating OFF/timer mode setting<br>0x41/0x42/0x43 | unsigned char | 1 byte | – | Set/Get | | | |
| Room heating status | 0xE7 | Room heating ON/room heating OFF<br>ON=0x41, OFF=0x42 | unsigned char | 1 byte | – | Get | | | |
| Start time of room heating | 0xE8 | Timer value HH:MM<br>0 to 0x17 : 0 to 0x3B<br>(=0 to 23) : (=0 to 59) | unsigned char × 2 | 2 bytes | – | Set/Get | | | |
| Duration time of room heating | 0xE9 | Duration time HH:MM<br>0–0x17 : 0–0x3B<br>(=0–23) : (=0–59) | unsigned char × 2 | 2 bytes | – | Set/Get | | | |
| Special operation mode setting | 0xEA | Used to set a special operation mode and get the status | unsigned char | 1 byte | – | Set/Get | | | |



© 2000 - 2023 ECHONET Consortium

| | | | | | | | | | |
|---|---|---|---|---|---|---|---|---|---|
| | | No setting: 0x40,<br>Over-cool prevention: 0x41<br>reserved for future use: 0x42- | | | | | | | |
| Human detection status | 0xEB | Indicate detection of human body<br>Detected = 0x41<br>Not detected = 0x42 | unsigned char | 1 byte | – | Get | | | |
| Seating detection status | 0xEC | This property indicates detection of seating<br>Detected = 0x41<br>Not detected = 0x42 | unsigned char | 1 byte | – | Get | | | |

Note: In the “Announcement at status change” column, ○ denotes mandatory processing when the property is implemented.

(1) Operation status (inherited from super class property)

This property indicates whether the heating toilet seat can accept the control (ON status) or not (OFF status). The ON status corresponds to 0x30, and the OFF status corresponds to 0x31. For the node equipped with the heating toilet seat class, it is also possible for the property to be implemented with the fixed value 0x30 if the heating toilet seat can accept the control as the node begins to work.

(2) Temperature level of toilet seat

This property indicates 0x31 to 0x3A for the 10 steps of low to high temperature of the toilet seat heating. The lowest level is 0x31 and the highest level is 0x3A. This property shall be effective even when the value of operation status property (0x80) is OFF (0x31).

(3) Heater setting of toilet seat

Sets ON/OFF status for the toilet seat heater. The toilet seat heater ON=0x41 and OFF=0x42.

(4) Temporal halt setting of toilet seat

Sets a temporal halt of the toilet seat and gets the status. There is a continuous setting which the setting is valid at any time, and there is a one-time setting which the setting turns to be invalid when the temporal halt is aborted, for the temporal halt setting. The property has relation to “the temporal halt start time of toilet seat” and “the toilet seat temporal halt time duration setting”.

Continuous setting=0x41, one time setting=0x42, no setting=0x43

(5) Temporal halt start time of toilet seat

When the temporal halt setting of toilet seat is continuous or one time setting, The time the toilet seat heater turns OFF is indicated by hours: 0x00 to 0x17(0 to 23) and minutes 0x00 to 0x3B(0 to 59). The property value shall sequentially indicate the hour and minute, beginning with the high-order byte.

(6) Temporal halt time duration of toilet seat



© 2000 - 2023 ECHONET Consortium

Sets the time from when temporal halt start of the toilet seat heater to when the toilet seat heater turns ON, and gets the status. The data format is hours: 0x00 to 0x17(0 to 23) and minutes 0x00 to 0x3B(0 to 59). The property value shall sequentially indicate the hour and minute, beginning with the high-order byte.

(7) Temperature level setting of room heating

This property indicates setting temperature by 0x31/0x32/0x33 for low/medium/high temperature for the room heating. This property shall be effective even when the value of operation status property (0x80) is OFF (0x31).

(8) Room heating setting

Sets ON/OFF/timer mode of the room heating. The property has relation to “room heating start time setting” or “room heating operation start setting”.

Room heating ON=0x41, room heating OFF=0x42, and timer mode setting=0x43.

(9) Room heating status

Gets the status ON/OFF of room heating.

Room heating ON=0x41, room heating OFF=0x42

(10) Start time of room heating

This property indicates when the room heater turns ON using hours: 0x00 to 0x17(0 to 23) and minutes 0x00 to 0x3B(0 to 59), when the room heating timer mode is set. The property value shall sequentially indicate the hour and minute, beginning with the high-order byte.

(11) Duration time of room heating

This property indicates when the room heater turns ON using the operation time from the start time. The data format is hours: 0x00 to 0x17(0 to 23) and minutes 0x00 to 0x3B(0 to 59). The property value shall sequentially indicate the hour and minute, beginning with the high-order byte.

(12) Special operation mode setting

Sets detail operation mode of the room heating and gets the status. The property value is 0x41 for over-cool prevention or 0x40 for no setting. Only possible value may be implemented for this property. This property shall be effective even when the value of operation status property (0x80) is OFF (0x31).

(13) Human detection status

This property indicates the detection of human body, detected/non detected. The property value is maintained until the status changes.

Human body detected=0x41, not detected=0x42



© 2000 - 2023 ECHONET Consortium

(14) Seating detection status

This property indicates the seating detection. The property value is maintained until the status changes.

Seating detected=0x41, not detected=0x42



© 2000 - 2023 ECHONET Consortium

## 3．3．10 Requirement for electric lock class

Class group code : 0x02

Class code : 0x6F

Instance code : 0x01-0x7F (0x00: All-instance specification code)

| Property name | EPC | Contents of property | Data type | Data size | Unit | Access rule | Man-datory | Announce-ment at status change | Remark |
|---|---|---|---|---|---|---|---|---|---|
| | | Value range (decimal notation) | | | | | | | |
| Operation status | 0x80 | This property indicates the ON/OFF status. | unsigned char | 1 byte | — | Set | | ○ | |
| | | ON=0x30, OFF=0x31 | | | | Get | ○ | | |
| Lock setting 1 | 0xE0 | Lock/unlock of main electric lock | unsigned char | 1 byte | — | Set/Get | ○ | ○ | |
| | | lock=0x41, unlock=0x42 | | | | | | | |
| Lock setting 2 | 0xE1 | Lock/unlock of sub electric lock | unsigned char | 1 byte | – | Set/Get | | | |
| | | lock=0x41, unlock=0x42 | | | | | | | |
| Lock status of door guard | 0xE2 | Lock status of door guard. | unsigned char | 1 byte | – | Get | | | |
| | | lock=0x41, unlock=0x42 | | | | | | | |
| Door open/close status | 0xE3 | Open/close status of door | unsigned char | 1 byte | – | Get | | | |
| | | open=0x41, close=0x42 | | | | | | | |
| Occupant/ non-occupant status | 0xE4 | Occupant/ non-occupant status of persons | unsigned char | 1 byte | – | Get | | | |
| | | occupant=0x41, non-occupant=0x42 | | | | | | | |
| Alarm status | 0xE5 | Alarm status of electric lock | unsigned char | 1 byte | – | Get | | ○ | |
| | | normal (no alarm)=0x40, break open=0x41, door open=0x42, manual unlocked=0x43, tampered=0x44 | | | | | | | |
| Automatic lock mode setting | 0xE6 | Sets ON/OFF of automatic lock mode and get the status | unsigned char | 1 byte | – | Set/Get | | | |
| | | ON=0x41, OFF=0x42 | | | | | | | |
| Battery level | 0xE7 | This property indicates the battery level to get the status of a battery level lower and in need of replacement. | unsigned char | 1 byte | – | Set/Get | | ○ | |
| | | Ordinary level=0x40<br>Notification of battery replacement = 0x41 | | | | | | | |

Note: In the “Announcement at status change” column, ○ denotes mandatory processing when the property is implemented.

(1) Operation status (inherited from super class property)

This property indicates whether the electric lock can accept the control (ON status) or not (OFF status). The ON status corresponds to 0x30 and the OFF status corresponds to 0x31. For the node equipped with the electric lock class, it is also possible for the property to be implemented with the fixed value 0x30 if the electric lock can accept the control as the node begins to work.



© 2000 - 2023 ECHONET Consortium

(2) Lock setting 1

Sets lock/unlock of the main electric lock and gets lock status. The locked status corresponds to 0x41 and the unlocked status corresponds to 0x42.

(3) Lock setting 2

Sets lock/unlock of the sub electric lock which is mounted on the same door as the main electric lock and gets lock status. The locked status corresponds to 0x41 and the unlocked status corresponds to 0x42.

(4) Lock status of door guard

Gets the status of whether the electric lock is “door guard” status, in which the door can be opened up to a certain slit, or not. The “door guard” status corresponds to 0x41 and the non “door guard” status corresponds to 0x42.

(5) Door open/close status

Gets open/close status of the door equipped with the main electric lock and the sub electric lock. The open status corresponds to 0x41 and the close status corresponds to 0x42.

(6) Occupant/ non-occupant status

This property indicates occupant/non-occupant status of persons. The occupant status corresponds to 0x41 and the non-occupant status corresponds to 0x42.

(7) Alarm status

This property indicates the alarm status. The normal status (no alarm) corresponds to 0x40, break open status corresponds to 0x41, door open status corresponds to 0x42, manual unlocked status corresponds to 0x43, and tampered status corresponds to 0x44. The meanings of individual alarms are shown as follows:

- Break open: The locked door opened
- Door open: The door remains open in a certain period of time
- Manual unlocked: The door was unlocked manually when the door must be unlocked electrically.
- Tampered: The door was tampered with; such as removal of the cover of the electric lock.

(8) Automatic lock mode setting

Sets ON/OFF of the automatic lock mode of electric lock and gets the status. The ON of the automatic mode is that the door is automatically locked when the door closes after the electric lock is unlocked. The OFF of the automatic mode is that the door remains unlocked when the door closes, in other words, the door keeps the status of the lock setting



© 2000 - 2023 ECHONET Consortium

(9) Battery level

This property indicates the battery level of an electric lock driven on a battery. Depending on the acquired level, the property indicates 0x40 for an ordinary level and 0x41 for a level lower than the threshold for replacement (notification of battery replacement supported). Then the status is acquired.



© 2000 - 2023 ECHONET Consortium

## 3. 3. 11 Requirements for instantaneous water heater class

Class group code : 0x02

Class code : 0x72

Instance code : 0x01-0x7F (0x00: All-instance specification code)

| Property name | EPC | Contents of property | Data type | Data size | Unit | Access rule | Man-datory | Announce-ment at status change | Remark |
|---|---|---|---|---|---|---|---|---|---|
| | | Value range (decimal notation) | | | | | | | |
| Operation status | 0x80 | This property indicates the ON/OFF status. | unsigned char | 1 byte | — | Set | | ○ | |
| | | ON=0x30, OFF=0x31 | | | | Get | ○ | | |
| Hot water heating status | 0xD0 | This property indicates the hot water heating status. | unsigned char | 1 byte | – | Get | ○ | | |
| | | Hot water heating status found = 0x41<br>Hot water heating status not found = 0x42 | | | | | | | |
| Set value of hot water temperature | 0xD1 | This property indicates the set value of the hot water temperature in °C. | unsigned char | 1 byte | °C | Get/Set | | | |
| | | 0x00–0x64 (0–100) | | | | | | | |
| Hot water warmer setting | 0xD2 | Hot water warmer setting | unsigned char | 1 byte | – | Get/Set | | | |
| | | Hot water warmer operation = 0x41<br>Hot water warmer operation resetting = 0x42 | | | | | | | |
| Duration of automatic operation setting | 0xDA | Timer value (HH:MM) | unsigned char × 2 | 2 bytes | – | Get/Set | | | |
| | | 0–0x17: 0–0x3B<br>(= 0–23): (= 0–59)<br>Limitless: 0xFFFF | | | | | | | |
| Remaining automatic operation time | 0xDB | Timer value (HH:MM) | unsigned char × 2 | 2 bytes | – | Get | | | |
| | | 0–0x17: 0–0x3B<br>(= 0–23): (= 0–59)<br>Infinite: 0xFFFF | | | | | | | |
| Set value of bath temperature | 0xE1 | This property indicates the set value of the bath temperature in °C. | unsigned char | 1 byte | °C | Get/Set | | | |
| | | 0x00–0x64 (0–100) | | | | | | | |
| Bath water heater status | 0xE2 | This property indicates whether or not the bath water heater is heating the bath water. | unsigned char | 1 byte | – | Get | ○ | | |
| | | Heating = 0x41Not heating = 0x42 | | | | | | | |
| Bath automatic mode setting | 0xE3 | Bath automatic mode ON/OFF | unsigned char | 1 byte | – | Set/Get | Ⓜ | | |
| | | Automatic ON = 0x41<br>Automatic OFF = 0x42 | | | | | | | |
| Bath additional boil-up operation setting | 0xE4 | Additional boil-up ON/OFF | unsigned char | 1 byte | – | Set/Get | | | |
| | | Additional boil-up ON = 0x41<br>Additional boil-up OFF = 0x42 | | | | | | | |
| Bath hot water adding operation setting | 0xE5 | Hot water addition ON/OFF | unsigned char | 1 byte | – | Set/Get | | | |
| | | Hot water addition ON = 0x41<br>Hot water addition OFF = 0x42 | | | | | | | |



© 2000 - 2023 ECHONET Consortium

| | | | | | | | | | |
|---|---|---|---|---|---|---|---|---|---|
| Bath water temperature lowering operation setting | 0xE6 | Hot water temperature lowering ON/OFF<br>Hot water temperature lowering ON = 0x41<br>Hot water temperature lowering OFF = 0x42 | unsigned char | 1 byte | – | Set/Get | | | |
| Bath hot water volume setting 1 | 0xE7 | This property indicates bath hot water volume in liters.<br>0x00–0xFD (0–253 liters) | unsigned char | 1 byte | liters | Set/Get | | | |
| Bath hot water volume setting 2 | 0xE8 | This property indicates the bath hot water volume (in 8 steps).<br>0x31–0x38 | unsigned char | 1 byte | – | Set/Get | | | |
| Bath hot water volume setting 3 | 0xEE | This property indicates the bath hot water volume in liters.<br>0x0000–0xFFFD (0 to 65533 liters) | unsigned short | 2 bytes | liter | Set/Get | | | |
| Bath hot water volume setting 4 | 0xD4 | The bath hot water volume is specified by the number of steps.<br>0x01-0xFF | unsigned char | 1 byte | – | Set/Get | | | |
| Bath hot water volume setting 4 - Maximum settable level | 0xD5 | The maximum settable level is the top step of Bath hot water volume setting 4.<br>0x01-0xFF | unsigned char | 1 byte | – | Get | | | |
| Bathroom priority setting | 0xE9 | Bathroom priority ON/OFF<br>Bathroom priority ON = 0x41,<br>Bathroom priority OFF = 0x42 | unsigned char | 1 byte | – | Get | | | |
| Shower hot water supply status | 0xEA | Shower hot water supply ON/OFF<br>Shower hot water supply ON = 0x41<br>Shower hot water supply OFF = 0x42 | unsigned char | 1 byte | – | Get | | | |
| Kitchen hot water supply status | 0xEB | Kitchen hot water supply ON/OFF<br>Kitchen hot water supply ON = 0x41<br>Kitchen hot water supply OFF = 0x42 | unsigned char | 1 byte | – | Get | | | |
| Hot water warmer ON timer reservation setting | 0xEC | Reservation ON/OFF<br>Reservation ON = 0x41<br>Reservation OFF = 0x42 | unsigned char | 1 byte | – | Get | | | |
| Set value of hot water warmer ON timer time | 0xED | Timer value (HH:MM)<br>0–0x17:0–0x3B<br>(= 0–23):(= 0–59) | unsigned char × 2 | 2 bytes | – | Set/Get | | | |
| Bath operation status monitor | 0xEF | This property indicates the status of a bath.<br>Supplying hot water = 0x41, keeping bath temperature = 0x43, stopped = 0x42 | unsigned char | 1 byte | – | Get | | ○ | |
| ON timer reservation setting | 0x90 | Reservation ON/Reservation OFF<br>Reservation ON = 0x41<br>Reservation OFF = 0x42 | unsigned char | 1 byte | – | Set/Get | | | |
| Set value of ON timer time | 0x91 | Timer value (HH:MM)<br>0–0x17: 0–0x3B<br>(= 0–23):(= 0–59) | unsigned char × 2 | 2 bytes | – | Set/Get | | | |
| Set value of ON | 0x92 | Timer value (HH:MM) | unsigned | 2 bytes | – | Set/Get | | | |



© 2000 - 2023 ECHONET Consortium

| | | | | | | | | | |
|---|---|---|---|---|---|---|---|---|---|
| timer relative time | | 0–0x17: 0–0x3B<br>(= 0–23):(= 0–59) | char × 2 | | | | | | |
| Sound volume setting | 0xD6 | This property sets the sound volume output from the operating units and acquires the setting status.<br>0x00–0x64 (0–100) | unsigned char | 1 byte | % | Set/Get | | | |
| Mute setting | 0xD7 | This property sets the volume mute status output from the operating units and acquires the setting status.<br>Mute ON = 0x30, Mute OFF = 0x31 | unsigned char | 1 byte | – | Set/Get | | | |

Note: In the “Announcement at status change” column, ○ denotes mandatory processing when the property is implemented.

This class is intended for use with instantaneous water heaters that use fossil fuels such as gases and kerosene and heat pump-based instantaneous water heaters.

For water heaters that heat stored water, it is recommended that the “electric water heater” class (class group code = 0x02, class code = 0x6B) be used. For the purposes of this ECHONET Specification, the term “instantaneous water heaters” shall include both “instantaneous water heaters having a heating unit in which water supplied from a water supply unit is heated by means of heat exchanging” and “instantaneous bath water heaters having a bath water heating unit that heats water or hot water filled in the bathtub by means of heat exchanging by continuously circulating the same water or hot water.” The two types of instantaneous water heaters shall be distinguished by using the terms “water heaters” (or water heating) and “bath water heaters (or bath water heating).” The “addition of hot water” function shall belong to instantaneous water heaters of the former type. If both “water heaters” and “bath water heaters” are indicated, the term “instantaneous water heater” shall be used.

(1) Operation status (inherited from the device object super class property)

This property indicates whether the instantaneous water heater is in the ON state (i.e. the instantaneous water heater responds to user operation) or OFF state. 0x30 and 0x31 shall be used for the ON and OFF states, respectively. In cases where the instantaneous water heater belongs to a node in which the “instantaneous water heater” class is implemented and is ready to respond to user operation as soon as the node starts up, 0x30 may be implemented as the fixed value.

(2) Hot water heating status

This property indicates whether or not the water heater is heating water. 0x41 and 0x42 shall be used for the “heating” and “not heating” states, respectively.

In the case of a heat pump-based water heater, the property value shall be 0x41 (“heating” state) and 0x42 (“not heating” state) when the compressor is in operation and when the compressor is not in operation, respectively.

In cases where the water heater has a separate bath water heater, the “bath water heater status” property (EPC = 0xE2) shall be implemented to indicate whether or not the bath water heater is heating bath water.



© 2000 - 2023 ECHONET Consortium

(3) Set value of hot water temperature

Used to specify the temperature of water supplied from the water heater to the tap (outlet) unit in °C, and to acquire the current setting. The property value range is 0x00 to 0x64 (0 to 100°C).

(4) Hot water warmer setting

Used to specify whether or not to use the water temperature maintenance function, and to acquire the current setting. 0x41 and 0x42 shall be used for the ON and OFF states, respectively. The water temperature maintenance function shall be defined as a function to maintain the temperature of water in the water heater and the tap (outlet) unit as well as in the section(s) in between using a sub tank or a water circulation system.

(5) Duration of automatic operation setting

Used to specify, in terms of a relative time, the period of time between a change in the value of the "Bath automatic mode setting" property (EPC = 0xE3) to 0x41 (ON) and a change back to 0x42 (OFF), and to acquire the current setting. The "hour (0x00 to 0x17 (0 to 23)): minute (0x00 to 0x3B (0 to 59))" format shall be used, with the higher- and lower-order bytes used for the "hour" and "minute" values, respectively.

When the value of this property is "0xFFFF," the water heating status shall remain at 0x41 for an indefinite period of time.

The value of this property shall not change over time. The remaining time of automatic operation shall be acquired with the "remaining automatic operation time" property (EPC = 0xDB).

(6) Remaining automatic operation time

Used to acquire the time remaining before the value of the "Bath automatic mode setting" property (EPC = 0xE3) changes to 0x42 (OFF). The "hour (0x00 to 0x17 (0 to 23)):minute (0x00 to 0x3B (0 to 59))" format shall be used, with the higher- and lower-order bytes used for the "hour" and "minute" values, respectively.

When the value of this property is "0xFFFF," the water heating status shall remain at 0x41 for an indefinite period of time.

(7) Set value of bath temperature

Used to specify (in °C) the temperature up to which the water heater will heat bath water, and to acquire the current setting. The property value range is 0x00 to 0x64 (0 to 100°C). When the water heater has a function to maintain the temperature of bath water by adding hot water, this property may also be used to specify and acquire the bath water temperature to be maintained.

(8) Bath water heater status

This property indicates whether or not the bath water heater is heating bath water. 0x41 and 0x42



© 2000 - 2023 ECHONET Consortium

shall be used for the “heating” and “not heating” states, respectively. The “bath water heater status” property value indicates the status of a separate water heater and is independent of the value of the “hot water heating status” property (EPC = 0xD0).

In the case of a water heater that does not have a bath water heater, the “bath water heater status” property value shall always be 0x42.

In the case of a heat pump-based water heater, the property value shall be 0x41 (“heating” state) and 0x42 (“not heating” state) when the compressor is in operation and when the compressor is not in operation, respectively.

In the case of a water heater with an integrated heat exchanger, this property may be used for the status of the switching valve instead.

(9) Bath automatic mode setting

Used to specify whether or not to use the “automatic bath water heating” mode, and to acquire the current setting. 0x41 and 0x42 shall be used for the ON and OFF states, respectively. Because there are wide differences between water heaters in terms of specifications relating to automatic bath water heating functions, the definition of the “automatic bath water heating” mode shall be implementation-dependent. However, an “automatic bath water heating” mode shall normally be a mode in which a series of processes is executed, such as the processes of “filling the bathtub with the specified volume of water, adding hot water as specified, reheating the water as specified and maintaining the temperature of the water at the specified level” or “unplugging the bathtub (draining the used bath water), cleaning the bathtub, plugging the bathtub, filling the bathtub with the specified volume of water, adding hot water as specified, reheating the water as specified and maintaining the temperature of the water at the specified level.” In the case where a “mobile service” is to be supported, the implementation of this property is mandatory.

(10) Bath additional boil-up operation setting

Used to specify whether or not to use the bath water reheating function, and to acquire the current setting. 0x41 and 0x42 shall be used for the ON and OFF states, respectively.

(11) Bath hot water adding operation setting

Used to specify whether or not to use the function to add hot water to the bath water in the bathtub, and to acquire the current setting. 0x41 and 0x42 shall be used for the ON and OFF states, respectively.

(12) Bath water temperature lowering operation setting

Used to specify whether or not to use the “Bath water temperature lowering operation” function, and to acquire the current setting. 0x41 and 0x42 shall be used for the ON and OFF states, respectively. “Bath water temperature lowering operation” shall mean slightly lowering the temperature of the bath water by adding cold water or by using other appropriate means.



© 2000 - 2023 ECHONET Consortium

(13) Bath hot water volume setting 1

Used to specify the bath water volume in liters, and to acquire the current setting. The property value range is 0x00 to 0xFD (0 to 253 liters). When the property value of the actual piece of equipment is higher than the upper limit of the property value range, the overflow code 0xFF shall be used. When the property value is lower than the lower limit of the property value range, the underflow code 0xFE shall be used.

In cases where implementation of the “Bath hot water volume setting 1” property is accompanied by the implementation of the “Bath hot water volume setting 2” property (EPC = 0xE8) or the “Bath hot water volume setting 3” property (EPC = 0xEE), the values of the properties shall be correlated.

(14) Bath hot water volume setting 2

Used to specify the bath water volume by selecting a level from among the eight predefined levels, and to acquire the current setting. The bath water volume values for the eight levels may be defined freely, as long as 0x31 and 0x38 are used for the minimum and maximum volumes, respectively.

In cases where implementation of the “Bath hot water volume setting 2” property is accompanied by the implementation of the “Bath hot water volume setting 1” property (EPC = 0xE7) or the “Bath hot water volume setting 3” property (EPC = 0xEE), the values of the properties shall be correlated.

(15) Bath hot water volume setting 3

Used to specify the bath water volume in liters, and to acquire the current setting. The property value range is 0x0000 to 0xFFFD (0 to 65533 liters). When the property value of the actual piece of equipment is higher than the upper limit of the property value range, the overflow code 0xFFFF shall be used. When the property value is lower than the lower limit of the property value range, the underflow code 0xFFFE shall be used.

In cases where implementation of the “Bath hot water volume setting 3” property is accompanied by the implementation of the “Bath hot water volume setting 1” property (EPC = 0xE7) or the “Bath hot water volume setting 2” property (EPC = 0xE8), the values of the properties shall be correlated.

(16) Bath hot water volume setting 4

The bath hot water volume is set by level. The minimum value is 0x01 and the maximum value is "Bath hot water volume setting 4 - Maximum settable level." No actual value is specified for each level. This property is related to "Bath hot water volume setting 4 - Maximum settable level."

(17) Bath hot water volume setting 4 - Maximum settable level

This property indicates the maximum settable level of “Bath hot water volume setting 4.” The minimum value is 0x01 and the maximum value is 0xFF. No actual value is specified for each



© 2000 - 2023 ECHONET Consortium

level. This property is related to "Bath hot water volume setting 4."

(18) Bathroom priority setting

Used to specify whether or not to place the water heater in the “Bathroom priority” mode (a mode in which priority is given to bath water heating-related functions, controls and/or user operations), and to acquire the current setting. 0x41 and 0x42 shall be used for the “Bathroom priority” mode and the non-“Bathroom priority” mode, respectively. Determination of the bath water heating-related functions, controls and/or user operations to be given high priority and the manner in which high priority is allocated shall be implementation-dependent.

(19) Shower hot water supply status

This property indicates whether the shower water heating function is used or not (i.e. the shower is being used or not). 0x41 and 0x42 shall be used for the ON and OFF states, respectively.

(20) Kitchen hot water heating status

This property indicates whether the kitchen water heating function is used or not. 0x41 and 0x42 shall be used for the ON and OFF states, respectively.

(21) Hot water warmer ON timer reservation setting

Specifies whether or not to use the water heating/water temperature maintenance reservation function. This property is used in combination with the “Set value of hot water warmer ON timer time” property.

(22) Bath operation status monitor

This property is used to monitor the status of a bath in automatic mode. The status of “Bath automatic mode setting property” (Automatic ON: 0x41) is monitored. This property indicates “supplying hot water: 0x41”, “keeping bath temperature: 0x43”, “stopped: 0x42.”

This property indicates the bath operation status when “Automatic ON” is set in (9) “Bath automatic mode setting.”

Supplying hot water: Including hot water supply and reheating until the target temperature until the completion of hot water supply is achieved

Keeping bath temperature: Including hot water addition and reheating to keep the bath temperature

The bath operation status is “stopped” when “Automatic OFF” is set in (9) “Bath automatic mode setting.”

(23) Set value of hot water warmer ON timer time

When the value of the “Hot water warmer ON timer reservation setting” property is “ON,” this property indicates, in the “hour (0x00 to 0x17 (0 to 23)):minute (0x00 to 0x3B (0 to 59))” format, the time at which the value of the “Hot water warmer setting” property (EPC = 0xD2) will change



© 2000 - 2023 ECHONET Consortium

to 0x41 (ON). The higher- and lower-order bytes shall be used for the “hour” and “minute” values, respectively.

(24) ON timer reservation setting

Specifies whether or not to use the “automatic bath water heating mode” reservation function. This property is used in combination with the “Set value of ON timer time” or “Set value of ON timer relative time” property.

(25) Set value of ON timer time

When the value of the “ON timer reservation setting” property is 0x41 (ON), this property indicates, in the “hour (0x00 to 0x17 (0 to 23)):minute (0x00 to 0x3B (0 to 59))” format, the time at which the value of the “Bath automatic mode setting” property (EPC = 0xE3) will change to 0x41 (ON). The higher- and lower-order bytes shall be used for the “hour” and “minute” values, respectively.

(26) Set value of ON timer relative time

When the value of the “ON timer reservation setting” property is 0x41 (ON), this property indicates, in terms of a time relative to the current time, the time at which the value of the “Bath automatic mode setting” property (EPC = 0xE3) will change to 0x41 (ON). The data format shall be “hour (0x00 to 0x17 (0 to 23)):minute (0x00 to 0x3B (0 to 59)).” The higher- and lower-order bytes shall be used for the “hour” and “minute” values, respectively.

(27) Sound volume setting

“Set” of this property is used to set the volume of operating sounds, voice guidance, notification melodies, interphone and others output from remote controllers and other operating units, etc.

“Get” of this property is used to acquire the value of the current volume setting.

This property indicates the volume value by percentage. The value is 0 (0x00) for the minimum volume and 100 (0x64) for the maximum volume of each device.

(28) Mute setting

“Set” of this property is used to set the volume mute output from operating units ON and OFF.

“Get” of this property is used to acquire the value of the current mute status.

Mute ON indicates that voice is not output, mute OFF indicates that voice is output.

Property values 0x30 and 0x31 correspond to mute ON and OFF, respectively.

The correlation between the “mute setting” property and the “volume setting” property shall depend on implementation.

(Example 1: If the value of the volume setting property is 20 when the mute function is OFF, the value of the volume setting property remains unchanged at 20 even after the mute function is



© 2000 - 2023 ECHONET Consortium

turned ON. On the other hand, when the mute function is ON, the value of the volume setting property may be 0 in some cases.)

(Example 2: If the value of the volume setting property is 20 when the mute function is OFF, the value of the volume setting property remains 20 even after the mute function is turned from OFF to ON and back to OFF. On the other hand, the value of the volume setting property may be 0.)



© 2000 - 2023 ECHONET Consortium

# 3．3．12 Requirements for bathroom heater and dryer class

Class group code : 0x02

Class code : 0x73

Instance code : 0x01–0x7F (0x00: All-instance specification code)

| Property name | EPC | Contents of property<br>Value range (decimal notation) | Data type | Data size | Unit | Access rule | Man-datory | Announce-ment at status change | Remark |
|---|---|---|---|---|---|---|---|---|---|
| Operation status | 0x80 | This property indicates the ON/OFF status.<br>ON : 0x30<br>OFF : 0x31 | unsigned char | 1 byte | — | Set<br>Get | <br>○ | ○ | |
| Operation setting | 0xB0 | Used to set the operation mode (ventilation mode, bathroom pre-warmer mode, bathroom heater mode, bathroom dryer mode, cool air circulation mode, mist sauna mode, water mist mode or “stop”), and to acquire the current setting.<br>Ventilation operation : 0x10<br>Bathroom pre-warmer operation : 0x20<br>Bathroom heater operation : 0x30<br>Bathroom dryer operation : 0x40<br>Cool air circulation operation : 0x50<br>Mist sauna operation : 0x60<br>Water mist operation : 0x61<br>Stop : 0x00 | unsigned char | 1 byte | – | Set/Get | ○ | | |
| Ventilation operation setting | 0xB1 | Used to set the ventilation air flow rate level for the ventilation mode and to acquire the current setting.<br>Automatic : 0x41<br>Standard : 0x42<br>Air flow rate level : 0x31–0x38 | unsigned char | 1 byte | – | Set/Get | | | |
| Bathroom pre-warmer operation setting | 0xB2 | Used to set the bathroom pre-warming level for the bathroom pre-warmer mode and to acquire the current setting.<br>Automatic : 0x41<br>Standard : 0x42<br>Bathroom pre-warming level: 0x31–0x38 | unsigned char | 1 byte | – | Set/Get | | | |
| Bathroom heater operation setting | 0xB3 | Used to set the bathroom heating level for the bathroom heater mode and to acquire the current setting.<br>Automatic : 0x41<br>Standard : 0x42<br>Bathroom heating level : 0x31–0x38 | unsigned char | 1 byte | – | Set/Get | | | |
| Bathroom dryer operation setting | 0xB4 | Used to set the bathroom drying level for the bathroom dryer mode and to acquire the current setting.<br>Automatic : 0x41<br>Standard : 0x42<br>Bathroom drying level: 0x31–0x38 | unsigned char | 1 byte | – | Set/Get | ○ | | |
| Cool air circulation operation setting | 0xB5 | Used to set the cool air circulation level for the cool air circulation mode and to acquire the current setting. | unsigned char | 1 byte | – | Set/Get | | | |



© 2000 - 2023 ECHONET Consortium

| | | | | | | | | | |
|---|---|---|---|---|---|---|---|---|---|
| | | Automatic : 0x41<br>Standard : 0x42<br>Cool air circulation level: 0x31–0x38 | | | | | | | |
| Mist sauna operation setting | 0xB6 | Set operation capacity level of mist sauna and acquire the current setting.<br>Automatic : 0x41<br>Standard : 0x42<br>Performance level : 0x31–38 | unsigned char | 1 byte | — | Set/Get | | | |
| Water mist operation settings | 0xB7 | Set operation capacity level of water mist and acquire the current setting<br>Automatic : 0x41<br>Standard : 0x42<br>Performance level: 0x31–38 | unsigned char | 1 byte | — | Set/Get | | | |
| Measured relative bathroom humidity | 0xBA | Used to acquire the measured relative humidity of the bathroom.<br>0x00–0x64 (0–100%) | unsigned char | 1 byte | % | Get | | | |
| Measured bathroom temperature | 0xBB | Used to acquire the measured temperature of the bathroom.<br>0x81–0x7D (-127–+125°C) | signed char | 1 byte | °C | Get | | | |
| Ventilation air flow rate setting | 0xC2 | Used to set the air flow rate level for the around-the-clock ventilation function and to acquire the current setting.<br>Automatic: 0x41<br>Air flow rate level: 0x31–0x38 | unsigned char | 1 byte | – | Set/Get | | | |
| Filter cleaning reminder sign setting | 0xCF | Used to set the filter cleaning reminder sign status (lit/not lit) and to acquire the current setting.<br>Lit: 0x41<br>Not lit: 0x42 | unsigned char | 1 byte | – | Set/Get | | | |
| Human body detection status | 0xE0 | Used to acquire the human body detection status.<br>Detected: 0x41<br>Not detected: 0x42 | unsigned char | 1 byte | – | Get | | | |
| ON timer-based reservation setting 1 | 0x90 | Used to set the ON/OFF status of the ON timer-based reservation function and to acquire the current setting.<br>Reservation function ON: 0x41<br>Reservation function OFF: 0x42 | unsigned char | 1 byte | – | Set/Get | | | |
| ON timer-based reservation setting 2 | 0xE1 | Used to set the ON/OFF status of the ON timer-based reservation function with the mode in which the device starts operating specified, and to acquire the current setting.<br>Reservation function ON for the ventilation mode : 0x10<br>Reservation function ON for the bathroom pre-warmer mode : 0x20<br>Reservation function ON for the bathroom heater mode : 0x30<br>Reservation function ON for the bathroom dryer mode : 0x40<br>Reservation function ON for the cool air circulation mode : 0x50<br>Mist sauna operation reservation: 0x60<br>Water mist operation reservation: 0x61<br>Reservation function OFF : 0x00 | unsigned char | 1 byte | – | Set/Get | | | |
| ON timer setting (time) | 0x91 | Used to set the time setting for the time-based reservation function for the ON timer (in the HH:MM format) and to acquire the current setting.<br>0–0x17: 0–0x3B<br>(= 0–23): (= 0–59) | unsigned char × 2 | 2 bytes | – | Set/Get | | | |



© 2000 - 2023 ECHONET Consortium

| | | | | | | | | | |
|---|---|---|---|---|---|---|---|---|---|
| ON timer setting (relative time) | 0x92 | Used to set the relative time setting for the relative time-based reservation function for the ON timer (in the HH:MM format) and to acquire the current setting.<br>0–0x17: 0–0x3B<br>(= 0–23): (= 0–59) | unsigned char × 2 | 2 bytes | – | Set/Get | | | |
| OFF timer-based reservation setting | 0x94 | Used to set the ON/OFF status of the OFF timer-based reservation function and to acquire the current setting.<br>Reservation function ON: 0x41<br>Reservation function OFF: 0x42 | unsigned char | 1 byte | – | Set/Get | | | |
| OFF timer setting (time) | 0x95 | Used to set the time setting for the time-based reservation function for the OFF timer (in the HH:MM format) and to acquire the current setting.<br>0–0x17: 0–0x3B<br>(= 0–23): (= 0–59) | unsigned char × 2 | 2 bytes | – | Set/Get | | | |
| OFF timer setting (relative time) | 0x96 | Used to set the relative time setting for the relative time-based reservation function for the OFF timer (in the HH:MM format) and to acquire the current setting.<br>0–0x17: 0–0x3B<br>(= 0–23): (= 0–59) | unsigned char × 2 | 2 bytes | – | Set/Get | | | |

Note: In the “Announcement at status change” column, ○ denotes mandatory processing when the property is implemented.

(1) Operation status (The device object super class property is inherited.)

This property indicates whether the bathroom heater and dryer is ready to accept control commands (ON state) or not (OFF state).

The values “0x30” and “0x31” shall be assigned to the ON and OFF states, respectively.

In the case of a node implemented with the bathroom heater and dryer class whose bathroom heater and dryer becomes ready to accept control commands as soon as the node starts operating, this property may be implemented with the property value fixed at “0x30.”

(2) Operation setting

Used to set the bathroom heater and dryer’s operation mode (ventilation mode, bathroom pre-warmer mode, bathroom heater mode, bathroom dryer mode, cool air circulation mode, mist sauna mode, water mist mode or “stop”), and to acquire the current setting. Each of the operation modes shall be assigned with the respective code value specified below.

| | |
|---|---|
| Ventilation operation | : 0x10 |
| Bathroom pre-warmer operation | : 0x20 |
| Bathroom heater operation | : 0x30 |
| Bathroom dryer operation | : 0x40 |
| Cool air circulation operation | : 0x50 |
| Mist sauna operation | : 0x60 |
| Water mist operation | : 0x61 |
| Stop | : 0x00 |



© 2000 - 2023 ECHONET Consortium

It is only required to implement the property values that correspond to the functions supported by the actual device implemented with this class.

This property shall be effective even when the value of the “operation status” property (“0x80”) is OFF (“0x31”).

(3) Ventilation operation setting

Used to set the ventilation air flow rate level for the ventilation mode and to acquire the current setting.

- The property value for the “automatic” state shall be “0x41.” This ECHONET Specification does not specify requirements regarding the functions to be provided in relation to the “automatic” state.
- The property value for the “standard” state shall be “0x42.” The “standard” state is a state in which the standard ventilation air flow rate level setting of the actual device implemented with this class is used.
- In addition, 8 predefined air flow rate levels shall be provided and the property values “0x31” to “0x38” shall be assigned to the 8 levels. The air flow rates that correspond to the 8 levels may be defined freely, as long as the property values “0x31” and “0x38” are assigned to the lowest and highest air flow rates, respectively.

It is only required to implement the property values that correspond to the functions supported by the actual device implemented with this class.

When this property is implemented, setting/acquisition must be possible even when the current setting of the “operation setting” property (“0xB0”) is other than the ventilation mode.

This property shall be effective even when the value of the “operation status” property (“0x80”) is OFF (“0x31”).

(4) Bathroom pre-warmer operation setting

Used to set the bathroom pre-warming level for the bathroom pre-warmer mode and to acquire the current setting.

- The property value for the “automatic” state shall be “0x41.” This ECHONET Specification does not specify requirements regarding the functions to be provided in relation to the “automatic” state.
- The property value for the “standard” state shall be “0x42.” The “standard” state is a state in which the standard bathroom pre-warming level setting of the actual device implemented with this class is used.
- In addition, 8 predefined bathroom pre-warming levels shall be provided and the property values “0x31” to “0x38” shall be assigned to the 8 levels. The bathroom pre-warming strengths that correspond to the 8 levels may be defined freely, as long as the property values “0x31” and “0x38” are assigned to the lowest and highest bathroom pre-warming strengths, respectively.

It is only required to implement the property values that correspond to the functions supported



© 2000 - 2023 ECHONET Consortium

by the actual device implemented with this class.

When this property is implemented, setting/acquisition must be possible even when the current setting of the "operation setting" property ("0xB0") is other than the bathroom pre-warmer mode.

This property shall be effective even when the value of the "operation status" property ("0x80") is OFF ("0x31").

(5) Bathroom heater operation setting

Used to set the bathroom heating level for the bathroom heater mode and to acquire the current setting.

- The property value for the "automatic" state shall be "0x41." This ECHONET Specification does not specify requirements regarding the functions to be provided in relation to the "automatic" state.
- The property value for the "standard" state shall be "0x42." The "standard" state is a state in which the standard bathroom heating level setting of the actual device implemented with this class is used.
- In addition, 8 predefined bathroom heating levels shall be provided and the property values "0x31" to "0x38" shall be assigned to the 8 levels. The bathroom heating strengths that correspond to the 8 levels may be defined freely, as long as the property values "0x31" and "0x38" are assigned to the lowest and highest bathroom heating strengths, respectively.

It is only required to implement the property values that correspond to the functions supported by the actual device implemented with this class.

When this property is implemented, setting/acquisition must be possible even when the current setting of the "operation setting" property ("0xB0") is other than the bathroom heater mode.

This property shall be effective even when the value of the "operation status" property ("0x80") is OFF ("0x31").

(6) Bathroom dryer operation setting

Used to set the bathroom drying level for the bathroom dryer mode and to acquire the current setting.

- The property value for the "automatic" state shall be "0x41." This ECHONET Specification does not specify requirements regarding the functions to be provided in relation to the "automatic" state.
- The property value for the "standard" state shall be "0x42." The "standard" state is a state in which the standard bathroom drying level setting of the actual device implemented with this class is used.
- In addition, 8 predefined bathroom drying levels shall be provided and the property values "0x31" to "0x38" shall be assigned to the 8 levels. The bathroom drying strengths that correspond to the 8 levels may be defined freely, as long as the property values "0x31" and "0x38" are assigned to the lowest and highest bathroom drying strengths, respectively.



© 2000 - 2023 ECHONET Consortium

It is only required to implement the property values that correspond to the functions supported by the actual device implemented with this class.

When this property is implemented, setting/acquisition must be possible even when the current setting of the "operation setting" property ("0xB0") is other than the bathroom drying mode.

This property shall be effective even when the value of the "operation status" property ("0x80") is OFF ("0x31").

(7) Cool air circulation operation setting

Used to set the cool air circulation level for the cool air circulation mode and to acquire the current setting.

- The property value for the "automatic" state shall be "0x41." This ECHONET Specification does not specify requirements regarding the functions to be provided in relation to the "automatic" state.
- The property value for the "standard" state shall be "0x42." The "standard" state is a state in which the standard cool air circulation level setting of the actual device implemented with this class is used.
- In addition, 8 predefined cool air circulation levels shall be provided and the property values "0x31" to "0x38" shall be assigned to the 8 levels. The cool air circulation strengths that correspond to the 8 levels may be defined freely, as long as the property values "0x31" and "0x38" are assigned to the lowest and highest cool air circulation strengths, respectively.

It is only required to implement the property values that correspond to the functions supported by the actual device implemented with this class.

When this property is implemented, setting/acquisition must be possible even when the current setting of the "operation setting" property ("0xB0") is other than the cool air circulation mode.

This property shall be effective even when the value of the "operation status" property ("0x80") is OFF ("0x31").

(8) Mist sauna operation setting

Set operation capacity level of mist sauna operation mode and acquire the current setting.

- The "automatic" status property value shall be 0x41. The specific functions for "automatic" status are not stipulated here.
- The "standard" status property value shall be 0x42. The "standard" status shall be the standard operation capacity level of an actual device that implements this class.
- Also, capacity levels shall be set at eight levels, and take the property values of 0x31 through 0x38. No specific values for the capacity levels are stipulated. However, the minimum value shall be 0x31 while the maximum shall be 0x38.

As for the property values adopted, actual devices implementing this class need only implement property values that can be adopted as their functions.

In cases where this property is implemented, this property shall be settable or acquirable if the



© 2000 - 2023 ECHONET Consortium

value of the operation setting property (0xB0) is set to modes other than mist sauna operation mode.

This property shall be effective even when the value of the “operation status” property (0x80) is OFF (0x31).

(9) Water mist operation settings

Set operation capacity level of water mist operation mode and acquire the current setting.

- The “automatic” status property value shall be 0x41. The specific functions for “automatic” status are not stipulated here.
- The “standard” status property value shall be 0x42. The “standard” status shall be the standard operation capacity level of an actual device that implements this class.
- Also, capacity levels shall be set at eight levels, and take the property values of 0x31 through 0x38. No specific values for the capacity levels are stipulated. However, the minimum value shall be 0x31 while the maximum shall be 0x38.

As for the property values adopted, actual devices implementing this class need only implement property values that can be adopted as their functions.

In cases where this property is implemented, this property shall be settable or acquirable if the value of the operation setting property (0xB0) is set to modes other than water mist operation mode.

This property shall be effective even when the value of the “Operation status” property (0x80) is OFF (0x31).

(10) Measured relative bathroom humidity

This property indicates the measured relative bathroom humidity in %.

The property value range shall be “0x00” to “0x64” (0 to 100%). When the property value of the actual device is higher than the property value range, the overflow code value “0xFF” shall be used. When the property value of the actual device is lower than the property value range, the underflow code value “0xFE” shall be used. When it is not possible to return a measured value, the value “0xFD” shall be used.

This property shall be effective even when the value of the “operation status” property (“0x80”) is OFF (“0x31”).

(11) Measured bathroom temperature

This property indicates the measured bathroom temperature in °C.

The property value range shall be “0x81” to “0x7D” (−127 to +125°C). When the property value of the actual device is higher than the property value range, the overflow code value “0x7F” shall be used. When the property value of the actual device is lower than the property value range, the underflow code value “0x80” shall be used.

When it is not possible to return a measured value, the value “0x7E” shall be used.



© 2000 - 2023 ECHONET Consortium

This property shall be effective even when the value of the “operation status” property (“0x80”) is OFF (“0x31”).

(12) Human body detection status

This property indicates the human body detection status (human body detection sensor).

Detected : 0x41

Not detected : 0x42

(13) Filter cleaning reminder sign setting

Used to set the filter cleaning reminder sign status (lit/not lit) and to acquire the current setting.

Lit : 0x41

Not lit : 0x42

This property shall be effective even when the value of the “operation status” property (“0x80”) is OFF (“0x31”).

(14) Ventilation air flow rate setting

Used to set the air flow rate level for the around-the-clock ventilation function and to acquire the current setting.

- The property value for the “automatic” state shall be “0x41.”
- In addition, 8 predefined air flow rate levels shall be provided and the property values “0x31” to “0x38” shall be assigned to the 8 levels. The air flow rates that correspond to the 8 levels may be defined freely, as long as the property values “0x31” and “0x38” are assigned to the lowest and highest air flow rates, respectively.

This property shall be effective even when the value of the “operation status” property (“0x80”) is OFF (“0x31”).

(15) ON timer-based reservation setting 1

Used to set the ON/OFF status of the ON timer-based reservation function and to acquire the current setting. The mode in which the device starts operating is not specified. This property works in combination with the “ON timer setting (time)” or “ON timer setting (relative time)” property.

Reservation function ON : 0x41

Reservation function OFF : 0x42

This property shall be effective even when the value of the “operation status” property (“0x80”) is OFF (“0x31”).

(16) ON timer-based reservation setting 2

Used to set the ON/OFF status of the ON timer-based reservation function with the mode in which the device starts operating specified, and to acquire the current setting. This property



© 2000 - 2023 ECHONET Consortium

works in combination with the “ON timer setting (time)” or “ON timer setting (relative time)” property. Each of the operation modes shall be assigned with the respective code value specified below.

| | |
|---|---|
| Reservation function ON for the ventilation mode | : 0x10 |
| Reservation function ON for the bathroom pre-warmer mode | : 0x20 |
| Reservation function ON for the bathroom heater mode | : 0x30 |
| Reservation function ON for the bathroom dryer mode | : 0x40 |
| Reservation function ON for the cool air circulation mode | : 0x50 |
| Reservation function ON for the mist sauna mode | : 0x60 |
| Reservation function ON for the water mist mode | : 0x61 |
| Reservation function OFF | : 0x00 |

It is only required to implement the property values that correspond to the functions supported by the actual device implemented with this class.

This property shall be effective even when the value of the “operation status” property (“0x80”) is OFF (“0x31”).

(17) ON timer setting (time)

This property indicates, when the “‘ON timer-based reservation’ setting 1” or “‘ON timer-based reservation’ setting 2” property value is a value for using the time-based reservation function, the time at which the bathroom heater and dryer will be turned on.

The “hour (0x00 to 0x17 (0 to 23)) : minute (0x00 to 0x3B (0 to 59))” format shall be used, with the higher- and lower-order bytes used for the “hour” and “minute” values, respectively.

This property shall be effective even when the value of the “operation status” property (“0x80”) is OFF (“0x31”).

(18) ON timer setting (relative time)

This property indicates, when the “‘ON timer-based reservation’ setting 1” or “‘ON timer-based reservation’ setting 2” property value is a value for using the relative time-based reservation function, the time at which the bathroom heater and dryer will be turned on as a relative time with respect to the current time.

The “hour (0x00 to 0x17 (0 to 23)) : minute (0x00 to 0x3B (0 to 59))” format shall be used, with the higher- and lower-order bytes used for the “hour” and “minute” values, respectively.

This property shall be effective even when the value of the “operation status” property (“0x80”) is OFF (“0x31”).

(19) OFF timer-based reservation setting

Used to set the ON/OFF status of the OFF timer-based reservation function. This property works in combination with the “OFF timer setting (time)” or “OFF timer setting (relative time)” property.



© 2000 - 2023 ECHONET Consortium

Reservation function ON : 0x41

Reservation function OFF : 0x42

This property shall be effective even when the value of the “operation status” property (“0x80”) is OFF (“0x31”).

(20) OFF timer setting (time)

This property indicates, when the “‘OFF timer-based reservation’ setting” property value is “ON,” the time at which the bathroom heater and dryer will be turned off.

The “hour (0x00 to 0x17 (0 to 23)) : minute (0x00 to 0x3B (0 to 59))” format shall be used, with the higher- and lower-order bytes used for the “hour” and “minute” values, respectively.

This property shall be effective even when the value of the “operation status” property (“0x80”) is OFF (“0x31”).

(21) OFF timer setting (relative time)

This property indicates, when the “‘OFF timer-based reservation’ setting” property value is “ON,” the time at which the bathroom heater and dryer will be turned off as a relative time with respect to the current time.

The “hour (0x00 to 0x17 (0 to 23)) : minute (0x00 to 0x3B (0 to 59))” format shall be used, with the higher- and lower-order bytes used for the “hour” and “minute” values, respectively.

This property shall be effective even when the value of the “operation status” property (“0x80”) is OFF (“0x31”).



© 2000 - 2023 ECHONET Consortium

# 3．3．13 Requirements for household solar power generation class

Class group code : 0x02

Class code : 0x79

Instance code : 0x01–0x7F (0x00: All-instance specification code)

| Property name | EPC | Contents of property<br>Value range (decimal notation) | Data type | Data size | Unit | Access rule | Man-datory | Announce-ment at status change | Remark |
|---|---|---|---|---|---|---|---|---|---|
| Operation status | 0x80 | This property indicates the ON/OFF status.<br>ON=0x30, OFF=0x31 | unsigned char | 1 byte | — | Set<br>Get | <br>○ | ○ | |
| Identification number | 0x83 | A number that allows each object to be uniquely identified.<br>The first byte: Lower-layer communication ID field<br>0x01-0xFD:<br>If a unique number is assigned by the lower-layer communication protocols, an arbitrary ID number is set according to the protocol types. (Not used in ECHONET Lite).<br>0x11-0x1F: Power line Communication Protocol a and d systems<br>0x31-0x3F: Low-Power Radio Communication Protocol<br>0x41-0x4F: Extended HBS<br>0x51-0x5F: IrDA<br>0x61-0x6F: LonTalk<br>0x71-0x7F: Bluetooth<br>0x81-0x8F: Ethernet<br>0x91-0x9F: IEEE802.11/11b<br>0xA1: Power line Communication Protocol c systems<br>0xB1: IPv6/Ethernet<br>0xB2: IPv6/6LoWPAN<br><br>0xFE:<br>2nd-17th bytes are defined by the manufacturer according to the product type. (Refer to the detailed explanation.)<br>0xFF:<br>This ID number is used if 2nd-9th bytes are randomly generated by the lower-layer communication protocols.<br>0x00:<br>Identification number is not set.<br><br>The second and succeeding bytes: unique number field | unsigned char | 9 or 17 bytes | — | Get | ○ | | |
| Fault description | 0x89 | Describes the fault.<br>Lower-order byte of the fault description code.<br>Higher-order byte of the fault description code.<br>See “(3) ‘Fault Description’ Property.” | unsigned short | 2 bytes | - | Get | ○ | | |
| Product code | 0x8C | Identifies the product using ASCII code.<br>(Defined by each manufacturer.) | unsigned char × 12 | 12 bytes | - | Get | ○ | | |
| Current time setting | 0x97 | Current time (HH: MM format) | unsigned | 2 | — | Set | | | |



© 2000 - 2023 ECHONET Consortium

| | | | | | | | | | |
|---|---|---|---|---|---|---|---|---|---|
| | | 0x00-0x17: 0x00-0x3B<br>(=0-23): (=0-59) | char<br>×2 | bytes | | Get | ○<br>*1 | | |
| Current date setting | 0x98 | Current date (YYYY: MM: DD format)<br>1-0x270F: 1-0x0C: 1-0x1F<br>(=1-9999): (=1-12): (=1-31) | unsigned char<br>×4 | 4 bytes | — | Set<br>Get | <br>○<br>*1 | | |
| Output power control setting 1 | 0xA0 | Used to set the output power control setting value in % of capacity approved by the equipment and acquire the current setting.<br>0x00-0x64 (0-100%) | unsigned char | 1 byte | % | Set/ Get | ○<br>*2 | | |
| Output power control setting 2 | 0xA1 | Used to set the output power control setting value in W and acquire the current setting.<br>0x0000-0xFFFD (0-65533) | unsigned short | 2 bytes | W | Set/ Get | ○<br>*2 | | |
| Function to control purchase of excess electricity setting | 0xA2 | Enables/disables function to control the purchase of excess electricity.<br>Valid=0x41, Invalid=0x42 | unsigned char | 1 byte | — | Set<br>Get | <br>○<br>*2 | | |
| Output power controlling schedule | 0xB0 | This property indicates the output power control ratio every 30 minutes for the current date and the day following the current date.<br>Current date (YYYY: MM: DD) + 0x00-0x64 (0-100%) × 96 (values every 30 minutes, for 2 days) | unsigned char<br>×4<br>＋<br>unsigned char<br>×96 | 100 bytes | — | Get | ○<br>*1 | | |
| Next access date and time | 0xB1 | This property indicates the next date and time for updating the output power controlling schedule.<br>YYYYMMDDhhmmss<br>0x01-0x270F: 0x01-0x0C: 0x01-0x1F: 0x00-0x17: 0x00-0x3B: 0x00-0x3B<br>(=1-9999): (=1-12): (=1-31): (=0-23): (=0-59): (=0-59) | unsigned char<br>×7 | 7 bytes | — | Get | ○<br>*1 | ○ | |
| Type for function to control purchase of excess electricity | 0xB2 | This property indicates enabling/disabling the function to control the purchase of excess electricity under the output power control by output power controlling schedule.<br>Valid=0x41, Invalid=0x42 | unsigned char | 1 byte | — | Get | ○<br>*1 | | |
| Output power change time setting value | 0xB3 | This property indicates the time when output power is changed to 100-0% (0-100%) of the rated power generation output (when the system is interconnected) by the output power controlling schedule in units of seconds.<br>0x0000-0xFFFD (0-65533) | unsigned short | 2 bytes | second | Get | | | |
| Upper limit clip setting value | 0xB4 | This property indicates the setting value when controlling the upper clip in units of W.<br>0x0000-0xFFFD (0-65533)<br>0xFFFF means no setting | unsigned short | 2 bytes | W | Get | ○<br>*1 | | |
| Operation power factor setting value | 0xC0 | This property indicates that the operation power factor setting value shall be indicated in units of %.<br>0x00-0x64 (0-100%) | unsigned char | 1 byte | % | Get | | | |
| FIT contract type | 0xC1 | This property indicates the FIT contract type.<br>FIT=0x41<br>Non-FIT=0x42<br>No setting＝0x43 | unsigned char | 1 byte | — | Set/Get | ○ | | |
| Self-consumption type | 0xC2 | This property indicates the self-consumption type.<br>With self-consumption=0x41<br>Without self-consumption=0x42<br>Unknown=0x43 | unsigned char | 1 byte | — | Get | ○ | | |



© 2000 - 2023 ECHONET Consortium

| | | | | | | | | | |
|---|---|---|---|---|---|---|---|---|---|
| Capacity approved by equipment | 0xC3 | This property indicates the capacity approved by equipment in units of W.<br>0x0000-0xFFFD (0-65533)<br>0xFFFF means no setting | unsigned short | 2 bytes | W | Get | ○<br>*3 | | |
| Conversion coefficient | 0xC4 | The ratio that converts the rated power generation output (when the system is interconnected) into the capacity approved by equipment.<br>0x00-0x64 (0-100%)<br>0xFF means no setting | unsigned char | 1 byte | % | Get | ○<br>*3 | | |
| System interconnection status | 0xD0 | This property indicates system interconnection status<br>System interconnected (reverse power flow acceptable) = 0x00<br>Independent = 0x01<br>System interconnected (reverse power flow not acceptable) =0x02<br>Unknown=0x03 | unsigned char | 1 byte | – | Get | ○ | | |
| Output power restraint status | 0xD1 | This property indicates the implementation status of output power restraint.<br>Ongoing restraint ( output power control)=0x41<br>Ongoing restraint (except output power control)=0x42<br>Ongoing restraint (reason for restraint is unknown)=0x43<br>Not restraining =0x44<br>Unknown=0x45 | unsigned char | 1 byte | – | Get | ○ | | |
| Measured instantaneous amount of electricity generated | 0xE0 | This property indicates instantaneous generated power in watts.<br>0x0000–0xFFFD (0–65,533) | unsigned short | 2 bytes | W | Get | ○ | | |
| Measured cumulative amount of electric energy generated | 0xE1 | This property indicates cumulative amount of electric energy in 0.001 kWh.<br>0x00000000–0x3B9AC9FF (0–999,999.999 kWh) | unsigned long | 4 bytes | 0.001 kWh | Get | ○ | | |
| Resetting cumulative amount of electric energy generated | 0xE2 | Resets cumulative amount of electric energy generated by setting 0x00.<br>Reset = 0x00 | unsigned char | 1 byte | – | Set | | | |
| Measured cumulative amount of electric energy sold | 0xE3 | This property indicates cumulative value of sold power in 0.001 kWh.<br>0x00000000–0x3B9AC9FF (0–999,999.999 kWh) | unsigned long | 4 bytes | 0.001 kWh | Get | | | |
| Resetting cumulative amount of electric energy sold | 0xE4 | Resets cumulative amount of electric energy sold by setting 0x00.<br>Reset = 0x00 | unsigned char | 1 byte | – | Set | | | |
| Power generation output limit setting 1 | 0xE5 | Specifies the power generation output as a percentage of the rated power generation output and to acquire the current setting.<br>0x00–0x64 (0–100%) | unsigned char | 1 byte | % | Set/Get | | | |
| Power generation output limit setting 2 | 0xE6 | Specifies the power generation output in watts and to acquire the current setting.<br>0x0000–0xFFFD (0–65,533) | unsigned short | 2 bytes | W | Set/Get | | | |
| Limit setting for the amount of electricity sold | 0xE7 | Specifies, in watts, the amount of electricity sold and to acquire the current setting.<br>0x0000–0xFFFD (0–65,533) | unsigned short | 2 bytes | W | Set/Get | | | |



© 2000 - 2023 ECHONET Consortium

| | | | | | | | | | |
|---|---|---|---|---|---|---|---|---|---|
| Rated power generation output (System-interconnected) | 0xE8 | This property indicates the rated power output in the system-interconnection status in watts. | unsigned short | 2 bytes | W | Set | | | |
| | | 0x0000-0xFFFD (0-65,533)<br>0xFFFF means no setting | | | | Get | ○ | | |
| Rated power generation output (Independent) | 0xE9 | This property indicates the rated power output in the independent status in watts. | unsigned short | 2 bytes | W | Set/Get | | | |
| | | 0x0000-0xFFFD (0-65,533) | | | | | | | |

Note1: In the "Announcement at status change" column, ○ denotes mandatory processing when the property is implemented.

Note 2:

*1: The installation shall be mandatory if output is controlled by the output power controlling schedule that is given to solar power generation.

*2: The installation of either output power control setting 1 or output power control setting 2, and the function to control surplus electricity purchase setting shall be mandatory, if the output power of the solar power generation can be controlled.

*3: The installation of either capacity approved by the equipment or the conversion coefficient shall be mandatory.

In this class, power and electric energy values shall be those of AC. The figure below shows an example configuration.

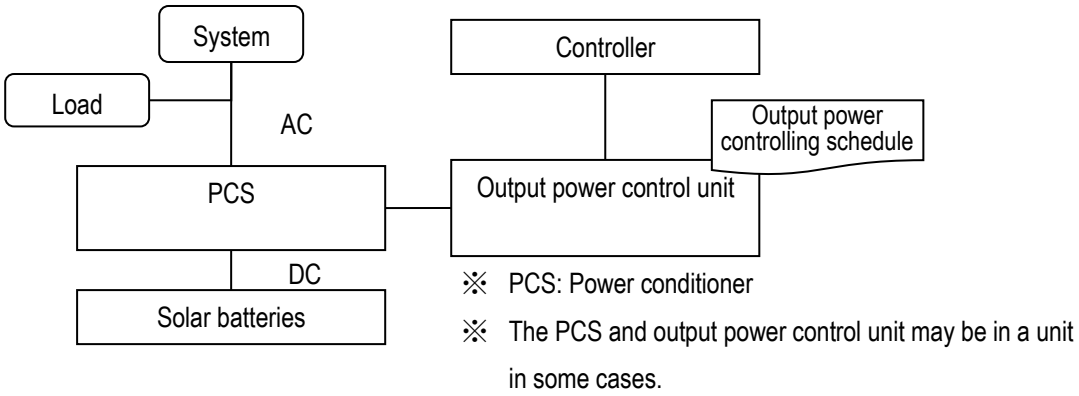


Definitions related to the term "output power control" are as follows.

- Output power control implemented by output power control setting 1 and output power control setting 2.
  Output power control using the values set to output power control setting 1 or output power control setting 2.
- Output power control through the output power controlling schedule
  Output power control implemented by household solar power generation itself using the output power controlling schedule that is given to the household solar power generation



© 2000 - 2023 ECHONET Consortium

- Output power control

  The PCS suppresses the power output from household solar power generation below an upper limit determined by output power control setting 1 or output power control setting 2 or by output power controlling schedule

- Output power restraint

  The PCS suppresses the power output from household solar power generation by any reasons including output power control or fastors such as rise in system voltage or PCS temperature, etc

- Upper limit clip

  This means the upper limit of the capable power output from household solar power generation, regardless to the value in the output power controlling schedule. In Japan, this shall be set only when the household solar power generation becomes a target of the output power control due to a reason such as PCS replacement.

- Function to control the purchase of excess electricity

  A function to allow generating power more than the upper limit determined by the output power control, and to control the power generation less than or equal to the self-consumption.

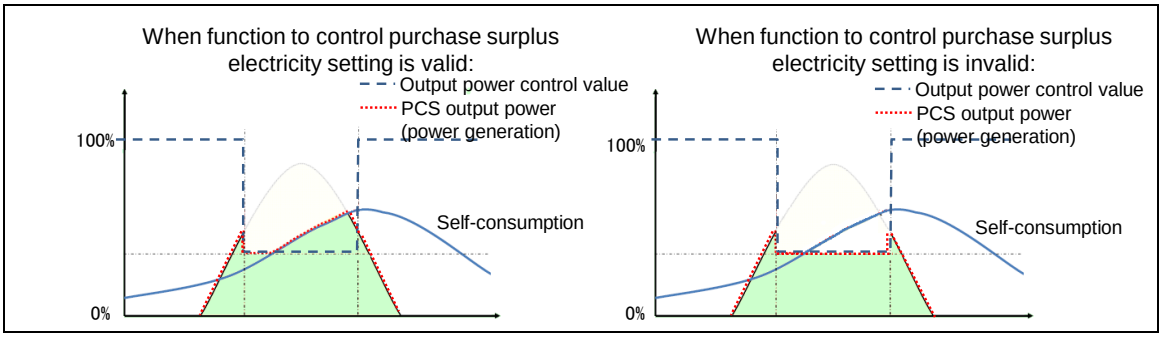


- Function to control purchase of excess electricity setting

  This setting enables/disables the function to control the purchase of excess electricity under the output power control by output power control setting 1 or output power control setting 2

- Type for function to control the purchase of excess electricity

  This type enables/disables the function to control the purchase of excess electricity under the output power control by output power controlling schedule.

(1) Operation status

This property indicates whether the function native to this class is operating or not (ON/OFF). In the node mounting this class, if the function of this class is started concurrently with the start of node operation, this property may be implemented at a fixed value of 0x30 (Operation status ON).

(2) Identification number (inherited from the property of the device object super class)

Definitions in ECHONET and ECHONET Lite are as follows: This property shall be required for



© 2000 - 2023 ECHONET Consortium

the household Solar Power Generations class.

•ECHONET definition

This property indicates a number that allows each node to be uniquely identified in the domain. The property indicates a lower-layer communication software ID field which stores IDs defined for each lower-layer communication software class and a unique number field that stores a unique identification number that is assigned to each product using a specified method for each lower-layer communication software program. The definition of this unique number is given in the specifications for lower-layer communication software programs in Part III. (However, Version3.00 and later versions of the ECHONET Specifications define this unique number for IP/Bluetooth-dependent lower-layer communication software and IP/Ethernet/IEEE802.3dependent lower-layer communication software.)

This unique number indicates the hardware address. If the hardware address is less than 8bytes, it shall be stored in the unique number field from the highest-order byte and the remaining bytes shall be padded with 0.

Each ECHONET node must have at least one device object, but the node identification number property value must be the same as the value of the node identification number property held by the device object.

•ECHONET Lite definition

This property indicates a number that allows each device object to be uniquely identified in the domain. As ECHONET Lite does not define lower-layer communication protocol classes, it only considers 0xFE, 0xFF, and 0x00 as protocol classes of lower-layer communication.

Manufacturer's specific code (0xFE) consists of a manufacturer code field to store the code of each manufacturer and a field defined by each manufacturer. The first to third bytes indicate a 3-byte manufacturer code specified by the ECHONET Consortium. The fourth and succeeding bytes store the unique ID of each vendor. Each vendor shall ensure that the codes will not overlap.

| | |
|---|---|
| Manufacturer code (3 bytes) | Unique ID field (unique identification number specified by the manufacturer) (13 bytes) |

(3) Fault description

The "Fault description" property shall be assigned fault description code values as specified in device object super class Table 2-3.

A "recoverable fault" as defined in the table is an abnormality that hinders the normal functioning of the device, but the cause of the fault can be removed by some action by the user, or the cause of the fault can be removed no action.



© 2000 - 2023 ECHONET Consortium

A “fault that requires repair” as defined in the table is a fault which is currently inhibiting the proper operation of the device or a function of the device and whose cause cannot be removed without repair work by a specialist.
The "Recover operation no required" may be caused by the power grid or by the environment such as temperature.
The "Repair location unknown" is a repair location cannot be specified.
Also, in some cases, such as a fault caused by a disturbance does not require repair.
The values between 0x03EA and 0x03FE, which are values for combinations of higher- and lower-order bytes of the fault description code, are reserved for future use.
When multiple faults occur at the same time, values are set in order of priority: "Faults that require repair", "A fault has occurred, but the recovery method or fault location cannot be determined", "Recoverable faults".
If the “Fault status” property (0x88) of the device object super class indicates that there is a fault (0x41), the lower-order byte of the "Fault Description Code" is 0x01 to 0xE9 or the "Fault Description Code" shall be 0x03FF. If the “Fault status” is no fault, the "Fault Description Code" shall be 0x0000.).

(4) Product code

The “Product code” property identifies the relevant product of the manufacturer using a 12-byte ASCII code. “Product code” property values are not defined by the ECHONET Consortium; they are defined by each manufacturer. When the “Product code” property value is less than 12 bytes, the product code shall be left-justified in the data area and the remainder of the data area shall be padded with NULLs or spaces.

(5) Current time setting

This property indicates the current local time using a value between 0x00 and 0x17 (0-23) for the hour and a value between 0x00 and 0x3B (0-59) for the minute. The first byte of the property value indicates the hour and the second byte indicates the minute.

(6) Current date setting

This property indicates the current date using a value between 0x0001 and 0x270F (1-9999) for the year, a value between 0x01 and 0x0C (1-12) for the month and a value between 0x01 and 0x1F (1-31) for the day. The first and second bytes are treated as one piece of unsigned short data which indicates the year (2 Bytes). The third byte indicates the month (1 Byte) and the fourth byte indicates the day (1 byte). Only Get is required for this class.

(7) Output power control setting 1



© 2000 - 2023 ECHONET Consortium

The output power shall be set with the capacity approved by the equipment in the units of %, and setting status shall be acquired. The property value range shall be from 0 to 100 (0x00-0x64), and the unit is %. When the value of this property is 100, no output power control is required. In the case where it is not possible to limit the output power using the value specified by this property, the output power control shall be limited using a value that is closest to and lower than the value specified by this property.

(8) Output power control setting 2

The output power shall be set in the units of W, and setting status shall be acquired. The property value range is from 0x0000 to 0xFFFD (0-65533). In the case where it is not possible to limit the output power using the value specified by this property, the output power control shall be limited using a value that is closest to and lower than the value specified by this property. Note that if there is no need to restrict the outputs, values greater than those indicated by the rated power generation output (system-interconnected) shall be set.

(9) Function to control purchase of excess electricity setting

This property indicates enabling/disabling the function to control the purchase of excess electricity under the output power control by output power control setting 1 or output power control setting 2.

Valid=0x41, Invalid=0x42

Valid: if the reverse power flow of the interconnection point is zero or below (self-consumption ≧ output power), when generating in excess of output power control setting 1 and output power control setting 2, and if the reverse power flow of the interconnection point is greater than zero (self-consumption ＜ output power), power generation shall be controlled not to exceed output power control setting 1 and output power control setting 2.

Invalid: power generation shall be controlled so as not to exceed output power control setting 1 and output power control setting 2

(10) Output power controlling schedule

The output power controlling schedule that shall be indicated shall be the solar power generation acquired from the system operator. The first four bytes indicate the current date; year: 0x0001-0x270F (1-9999), month: 0x01-0x0C (1-12), day: 0x01-0x1F (1-31), and the remaining 96 bytes shall indicate the output power control rate of the solar power generation (0x00: 0%-0x64: 100%) × 96 (value for every 30 minutes, current date 00:00-00:30, 00:30-01:00, ..., 23:30-00:00, the day following the current date 00:00-00:30, 00:30-01:00, ...,, 23:30-00:00, two days in total) as a property value. In the case of 100%, there is no need to implement output power control. For solar power generation that requires no output power control with the output power controlling



© 2000 - 2023 ECHONET Consortium

schedule and cases where the output power controlling schedule has not been acquired, the first four bytes (current date) shall be: year: 0xFFFF, month: 0xFF, date: 0xFF, and 0xFF for output power control rate. If the output power controlling schedule given to the solar power generation is less than two days, the output power control rate for the time slot with shortage shall be 0xFF.

(11) Next access date and time

This property indicates the next date and time for updating of the output power controlling schedule in : year: 0x0001-0x270F (1-9999), month: 0x01-0x0C (1-12), date: 0x01-0x1F (1-31), hour: 0x00-0x17 (0-23), minute: 0x00-0x3B (0-59), and second: 0x00-0x3B (0-59). Solar power generation that requires no output power control by output power controlling schedule and cases where output power controlling schedule has not been acquired shall be: year: 0xFFFF, month: 0xFF, date: 0xFF, minute: 0xFF, and second: 0xFF.

(12) Type for function to control purchase of excess electricity

This property indicates enabling/disabling the function to control the purchase of excess electricity under the output power control by output power controlling schedule.

Valid=0x41, Invalid=0x42

Valid: if reverse power flow of the interconnection point is zero or below (self-consumption ≧ output power), when generating in excess of output power control schedule and output power control rate, and if reverse power flow of the interconnection point is greater than zero (self-consumption ＜ output power), output power shall be controlled not to exceed output power control rate.

Invalid: output power shall be controlled for not to exceed the output power control schedule and output power control rate.

(13) Output power change time setting value

This property indicates the time to change output power to 100-0% (0-100%) of the rated output power (when the system is interconnected) when the output power is controlled by output power controlling schedule in units of seconds.

The property value range is from 0x0000 to 0xFFFD (0-65533).

(14) Upper limit clip setting value

This property indicates the upper limit clip setting value in units of W, when controlling output power using the output power controlling schedule.

The property value range shall be from 0x0000 to 0xFFFD (0-65533), and 0xFFFF when there is no value set.



© 2000 - 2023 ECHONET Consortium

(15) Operation power factor setting value

This property indicates the setting value of the operation power factor (proportion of effective power against apparent power) in units of %. The property value range shall be from 0x00 to 0x64 (0-100).

(16) FIT contract type

This property sets FIT contract type and indicates setting status.

FIT=0x41, Non-FIT=0x42, No setting=0x43

(17) Self-consumption type

This property indicates the type of self-consumption.

If household solar power generation cannot recognize the existence of self-consumption, the type shall be “unknown”.

With self-consumption=0x41, without self-consumption=0x42, and unknown=0x43

(18) Capacity approved by equipment

This property indicates the capacity approved by equipment in units of W. The capacity approved by equipment shall be whichever is the smaller of the rated power generation output (system-interconnected) and total capacity of the solar batteries, and its property value range shall be from 0x0000 to 0xFFFD (0-65533), and 0xFFFF when there is no value set.

An example of capacity approved by equipment is illustrated below.

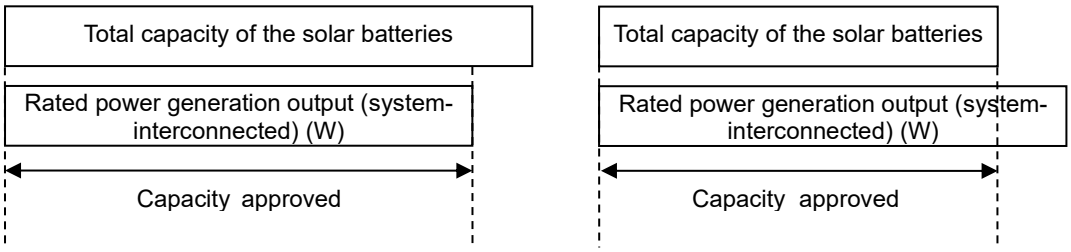


(19) Conversion coefficient

This property indicates the coefficient that converts the rated power generation output (system-interconnected) into the capacity approved by the equipment in units of %. The conversion coefficient is a value that devices the capacity approved by the equipment by the rated power generation output (system-interconnected). The property value range shall be from 0 to 100 (0x00-0x64), and 0xFF when there is no value set.

(20) System interconnection status



© 2000 - 2023 ECHONET Consortium

This property indicates the current status of interconnection with the system (system interconnection). If the output power control unit does not have information related to the system interconnection status, then the value shall be “unknown”.

System interconnected (reverse power flow acceptable) = 0x00, Independent = 0x01,

System interconnected (reverse power flow not acceptable) = 0x02, unknown=0x03.

(21) Output power restraint status

This property indicates the implementation status of the output power restraint . The cases shall be determined that are unable to distinguish controls other than the output power control as “ongoing restraint” (reason of restraint is unknown), and if the output power control units have no information regarding output power restraint status, determine them as “unknown”.

Ongoing restraint (by output power control)＝0x41, ongoing restraint (except output power control)=0x42, ongoing restraint (reason of restraint is unknown)=0x43, not restraining＝0x44, unknown＝0x45

(20) Measured instantaneous amount of electricity generated

This property indicates the instantaneous power generation output in watts. The property value range shall be 0x0000 to 0xFFFD. When the property value of the actual piece of equipment is higher than the upper limit of the property value range, the overflow code 0xFFFF shall be used. When the property value is lower than the lower limit of the property value range, the underflow code 0xFFFE shall be used.

(21) Measured cumulative amount of electric energy generated

This property indicates the cumulative amount of electric energy generated in kWh. The property value range shall be 0x00000000 to 0x3B9AC9FF (0 to 999,999.999 kWh). When the cumulative amount of electric energy overflows, the property value shall be incremented again from 0x00000000.

(22) Resetting cumulative amount of electric energy generated

Resets the cumulative amount of electric energy generated to zero by setting 0x00.

(23) Measured cumulative amount of electric energy sold

This property indicates the cumulative amount of electric energy sold in kWh. The property value range shall be 0x00000000 to 0x3B9AC9FF (0 to 999,999.999 kWh). When the cumulative amount of electric energy overflows, the property value shall be incremented again from 0x00000000.

(24) Resetting cumulative amount of electric energy sold

Resets the cumulative amount of electric energy generated to zero by setting 0x00.

(25) Power generation output limit setting 1

Used to specify the power generation output as a percentage of the rated power generation output and to acquire the current setting. The value range for this property is from 0 to 100 (from 0x00 to 0x64), and the unit is %. When the value of this property is 100, no limit is imposed. In the case where it is not possible to limit the power generation output using the value specified by this property, the power generation output shall be limited using a value that is closest to and lower than the value specified by this property.



© 2000 - 2023 ECHONET Consortium

(26) Power generation output limit setting 2

Used to specify the power generation output in watts and to acquire the current setting. The value range for this property is from 0x0000 to 0xFFFD (from 0 to 65533). In the case where it is not possible to limit the power generation output using the value specified by this property, the power generation output shall be limited using a value that is closest to and lower than the value specified by this property.

(27) Limit setting for the amount of electricity sold

Used to specify, in watts, the amount of electricity sold and to acquire the current setting. The value range for this property is from 0x0000 to 0xFFFD (from 0 to 65533). In the case where it is not possible to limit the amount of electricity sold using the value specified by this property, the amount of electricity sold shall be limited using a value that is closest to and lower than the value specified by this property.

(28) Rated power generation output (System interconnected)

This property indicates the rated power generation output (catalog value) in the system-interconnected status (reverse power flow acceptable or not acceptable) in watts. The value range for this property is from 0x0000 to 0xFFFD (from 0 to 65,533).

(29) Rated power generation output (Independent)

This property indicates the rated power output (catalog value) in the independent status in watts. The property value range shall be from 0x0000 to 0xFFFD (0-65533), and 0xFFFF when there is no value set.



© 2000 - 2023 ECHONET Consortium

# 3．3．14 Requirement for cold or hot water heat source equipment class

Class group code : 0x02

Class code : 0x7A

Instance code : 0x01–0x7F (0x00: All-instance specification code)

| Property name | EPC | Contents of property<br>Value range (decimal notation) | Data type | Data size | Unit | Access rule | Man-datory | Announce-ment at status change | Remark |
|---|---|---|---|---|---|---|---|---|---|
| Operation status | 0x80 | This property indicates the ON/OFF status.<br>ON=0x30, OFF=0x31 | unsigned char | 1 byte | — | Set<br>Get | <br>○ | ○ | |
| Operation mode setting | 0xE0 | Set the operation mode of heating (hot water)/cooling (cold water) and gets the status<br>Heating=0x41, Cooling=0x42 | unsigned char | 1 byte | — | Set/Get | | | |
| Cold water temperature setting 2<br>Maximum allowable setting level | 0xD1 | The maximum number of steps for cooling (cold water) water temperature setting 2<br>0x21–0x2F | unsigned char | 1 byte | — | Set/Get | | ○ | |
| Warm water temperature setting 2<br>Maximum allowable setting level | 0xD2 | The maximum number of steps for heating (warm water) water temperature setting 2<br>0x31–0x3F | unsigned char | 1 byte | — | Set/Get | | ○ | |
| Water temperature setting 1 | 0xE1 | This property indicates water temperature setting。<br>0x00–0x64 (0–100°C)<br>Automatic=0x71 | unsigned char | 1 byte | °C | Set/Get | ○ | | Note1 |
| Water temperature setting 2 | 0xE2 | This property indicates water temperature setting level by 15 steps<br>Cooling (cold water):0x21–0x2F<br>Heating (hot water):0x31–0x3F<br>Indicated the minimum to maximum level respectively<br>Automatic=0x41 | unsigned char | 1 byte | — | Set/Get | ○ | | Note1 |
| Measured temperature of outward water<br>(Exit water Temperature) | 0xE3 | Measured temperature of outward water<br>0x00–0x64 (0–100°C) | unsigned char | 1 byte | °C | Get | | | |
| Measured temperature of inward water<br>(Entrance water temperature) | 0xE4 | Measured temperature of inward water<br>0x00–0x64 (0–100°C) | unsigned char | 1 byte | °C | Get | | | |
| Special operation setting | 0xE5 | Sets Normal Operation/ modest operation/high power operation and gets the status<br>Normal Operation=0x41, modest operation=0x42、high power operation=0x43 | unsigned char | 1 byte | — | Set/Get | | | |



© 2000 - 2023 ECHONET Consortium

| | | | | | | | | | |
|---|---|---|---|---|---|---|---|---|---|
| Daily timer setting | 0xE6 | Daily timer ON/OFF<br>Up to 2 kinds of timers can be used<br>Timer OFF=0x40, timer 1=0x41<br>timer 2=0x42 | unsigned char | 1 byte | — | Set/Get | | | |
| Daily timer setting 1 | 0xE7 | Time set by daily timer<br>Set the time in the unit of 30 minutes, dividing 24 hours by 30 minutes and allocated 6 bytes.<br>Each bit 1: worked 0: stopped | unsigned char × 6 | 6 bytes | — | Set/Get | | | |
| Daily timer setting 2 | 0xE8 | Time set by daily timer<br>Set the time in the unit of 30 minutes, dividing 24 hours by 30 minutes and allocated 6 bytes.<br>Each bit 1: worked 0: stopped | unsigned char × 6 | 6 bytes | — | Set/Get | | | |
| ON timer reservation setting | 0x90 | Reservation ON/OFF<br>ON=0x41, OFF=0x42 | unsigned char | 1 byte | — | Set/Get | | | |
| ON timer setting | 0x91 | Timer value HH:MM<br>0–0x17: 0–0x3B<br>(=0–23):(=0–59) | unsigned char × 2 | 2 bytes | — | Set/Get | | | |
| Relative ON timer setting | 0x92 | Timer value HH:MM<br>0–0x17: 0–0x3B<br>(=0–23):(=0–59) | unsigned char × 2 | 2 byte | — | Set/Get | | | |
| OFF timer reservation setting | 0x94 | Reservation ON/OFF<br>ON=0x41, OFF=0x42 | unsigned char | 1 byte | — | Set/Get | | | |
| Time set by OFF timer | 0x95 | Timer value HH:MM<br>0–0x17: 0-–0x3B<br>(=0–23):(=0–59) | unsigned char × 2 | 2 bytes | — | Set/Get | | | |
| Relative OFF timer setting | 0x96 | Timer value HH:MM<br>0–0x17: 0–0x3B<br>(=0–23):(=0–59) | unsigned char × 2 | 2 bytes | — | Set/Get | | | |
| Measured instantaneous power consumption | 0x84 | This property indicates the instantaneous power consumption of a device in watts<br>0x0000-0xFFFD (0-65533) | unsigned short | 2 bytes | W | Get | | | |
| Measured cumulative electric energy consumption | 0x85 | This property indicates the cumulative electric energy consumption of a device in units of 0.001kWh<br>0x00000000-0x3B9AC9FF<br>(0-999,999.999) | unsigned long | 4 bytes | kWh | Get | | | |
| Rated power consumption | 0xE9 | Rated power consumption of heater (hot water) / cooler (cold water) in watts for each operating mode<br>0x0000-0xFFFD (0-65533W)<br>Heater (hot water) : cooler (cold water) | unsigned short ×2 | 4 bytes | W | Get | | | |
| Power consumption measurement method | 0xEA | This property indicates the method of measuring instantaneous power consumption, cumulative electric energy consumption and rated power consumption | unsigned char | 1 byte | — | Get | | | |



© 2000 - 2023 ECHONET Consortium

| | | | | | | | | | |
|---|---|---|---|---|---|---|---|---|---|
| | | Node unit = 0x41<br>Class unit = 0x42<br>Instance unit = 0x43 | | | | | | | |

Note: In the “Announcement at status change” column, ○ denotes mandatory processing when the property is implemented.

Either “Water temperature setting 1” or “Water temperature setting 2” must be specified.

(1) Operation status (inherited from device object super class property)

This property indicates ON/OFF of the heat source. ON/OFF shall correspond to the property value of 0x30/0x31.

(2) Operation mode setting

Sets operation mode of heating (hot water)/cooling (cold water) and gets the setting status. The mode corresponds to the property value of 0x41/0x42 sequentially. When a heat pump is used as a heat source, the heat source can generate not only hot water for floor heating but also cold water. The property is used for switching of operation mode.

This property shall be effective even when the value of operation status property (0x80) is OFF (0x31).

(3) Maximum allowable level for cold water temperature setting 2

This property indicates the maximum value of acceptable water temperature setting 2 when using cooling (cold water). The property value range shall be 0x21 to 0x2F. Specific values of each level are not specified.

This property changes according to heat source controllers and user operations. The heat source controllers and timing of the change are not stipulated.

This property relates to “water temperature setting 2” property. When “water temperature setting 2” is in Automatic status, contents of the maximum allowable setting level for cold water temperature setting 2 shall become invalid.

(4) Maximum allowable level for warm water temperature setting 2

This property indicates the maximum value of acceptable water temperature setting 2 when using heating (warm water). The property value range shall be 0x31 to 0x3F. Specific values of each level are not specified.

This property changes according to connected heat source controllers and user operations. The heat source controllers and timing of the change are not stipulated.

This property relates to “water temperature setting 2” property. When “water temperature setting 2” is in Automatic status, contents of the maximum allowable setting level for warm water temperature setting 2 shall become invalid.



© 2000 - 2023 ECHONET Consortium

(5) Water temperature setting 1

This property indicates the setting value of water temperature in degrees in Celsius and sets the property values to be 0°C to 100°C (0x00 to 0x64).

When this property indicates an automatic operation worked by an algorithm of automatic temperature setting of the heat source equipment, Automatic=0x71 (automatic temperature) is set.

This property shall be effective even when the value of operation status property (0x80) is OFF (0x31).

Either this property or Water temperature setting 2 (0xE2) must be implemented.

(6) Water temperature setting 2

This property indicates the setting value of water temperature by 15 steps and the property value is 0x21 to 0x2F for cooling (cold water) or 0x31 to 0x3F for heating (hot water). Each temperature level does not specify the figures in Celsius, and shall indicate 0x21 or 0x31 for the minimum temperature and 0x2F or 0x3F for the maximum temperature.

When this property indicates an automatic operation worked by an algorithm of automatic temperature setting of the heat source equipment, Automatic=0x41 (automatic temperature) is set.

This property shall be effective even when the value of operation status property (0x80) is OFF (0x31).

Either this property or Water temperature setting 1 (0xE1) must be implemented.

If implementing “maximum allowable level for cold water temperature setting 2” when using cooling (cold water), the minimum temperature shall be 0x21, while the maximum temperature shall be the maximum allowable setting level for cold water temperature setting 2.

If implementing “maximum allowable level for warm water temperature setting 2” when using heating (warm water), the minimum temperature shall be 0x31, while the maximum temperature shall be the maximum allowable setting level for warm water temperature setting 2.

When “water temperature setting 2” is in an Automatic status, contents of the maximum allowable setting level for cold water temperature setting 2 and the maximum allowable setting level for warm water temperature setting 2 shall become invalid.

(7) Measured temperature of outward water (exit water temperature)

This property indicates the measured temperature of outward water that goes out of the heat source equipment in Celsius. The range of the property value shall be 0x00 to 0x64 (0 to 100°C). The property value shall be used the overflow code 0x7F when the measured property value of the actual equipment is over the range, and shall be used the underflow code 0x80 when the measured property value of the actual equipment is less the range. 0x7E shall be used when the measured value cannot be returned.

This property shall be effective even when the value of operation status property (0x80) is OFF (0x31).



© 2000 - 2023 ECHONET Consortium

(8) Measured temperature of inward water (entrance water temperature)

This property indicates the measured temperature of inward water that comes into the heat source in Celsius. The range of the property value shall be 0x00 to 0x64 (0 to 100°C). The property value shall be used the overflow code 0x7F when the measured property value is over the range, and shall be used the underflow code 0x80 when the measured property value is less the range. 0x7E shall be used when the measured value cannot be returned.

This property shall be effective even when the value of operation status property (0x80) is OFF (0x31).

(9) Special operation setting

Sets normal/modest/high power operation and gets the status. This property corresponds to the property value of 0x41/0x42/0x43.

The modest operation temporarily controls at a lower temperature for the water temperature setting value. The high power operation temporarily controls at a higher temperature for the water temperature setting value.

(10) Daily timer setting

Sets ON/OFF of the daily timer and gets the status.

2 kinds of daily timers can be used (for weekdays or holidays, for example).

Timer OFF: 0x40, timer 1 ON: 0x41, timer 2 ON: 0x42.

This property shall be effective even when the value of operation status property (0x80) is OFF (0x31).

(11) Daily timer setting 1

(12) Daily timer setting 2

Set the setting values of the timer 1 and the timer 2 for “daily time setting” and get the status respectively.

24 hours is divided by 30 minutes .The timer is set in the unit of 30 minutes and allocated 6 bytes. 1: operated or 0: stopped is indicated for each bit.

This property shall be effective even when the value of operation status property (0x80) is OFF (0x31).



© 2000 - 2023 ECHONET Consortium

The 1st byte

| b0 | b1 | b2 | b3 | b4 | b5 | b6 | b7 |
|---|---|---|---|---|---|---|---|
| 0:00<br>-0:29 | 0:30<br>-0:59 | 1:00<br>-1:29 | 1:30<br>-1:59 | 2:00<br>-2:29 | 2:30<br>-2:59 | 3:00<br>-3:29 | 3:30<br>-3:59 |

The 2nd byte

| b0 | b1 | b2 | b3 | b4 | b5 | b6 | b7 |
|---|---|---|---|---|---|---|---|
| 4:00<br>-4:29 | 4:30<br>-4:59 | 5:00<br>-5:29 | 5:30<br>-5:59 | 6:00<br>-6:29 | 6:30<br>-6:59 | 7:00<br>-7:29 | 7:30<br>-7:59 |

The 3rd byte

| b0 | b1 | b2 | b3 | b4 | b5 | b6 | b7 |
|---|---|---|---|---|---|---|---|
| 8:00<br>-8:29 | 8:30<br>-8:59 | 9:00<br>-9:29 | 9:30<br>-9:59 | 10:00<br>-10:29 | 10:30<br>-10:59 | 11:00<br>-11:29 | 11:30<br>-11:59 |

The 4th byte

| b0 | b1 | b2 | b3 | b4 | b5 | b6 | b7 |
|---|---|---|---|---|---|---|---|
| 12:00<br>-12:29 | 12:30<br>-12:59 | 13:00<br>-13:29 | 13:30<br>-13:59 | 14:00<br>-14:29 | 14:30<br>-14:59 | 15:00<br>-15:29 | 15:30<br>-15:59 |

The 5th byte

| b0 | b1 | b2 | b3 | b4 | b5 | b6 | b7 |
|---|---|---|---|---|---|---|---|
| 16:00<br>-16:29 | 16:30<br>-16:59 | 17:00<br>-17:29 | 17:30<br>-17:59 | 18:00<br>-18:29 | 18:30<br>-18:59 | 19:00<br>-19:29 | 19:30<br>-19:59 |

The 6th byte

| b0 | b1 | b2 | b3 | b4 | b5 | b6 | b7 |
|---|---|---|---|---|---|---|---|
| 20:00<br>-20:29 | 20:30<br>-20:59 | 21:00<br>-21:29 | 21:30<br>-21:59 | 22:00<br>-22:29 | 22:30<br>-22:59 | 23:00<br>-23:29 | 23:30<br>-23:59 |

(13) ON timer reservation setting

Sets reservation ON/OFF of the ON timer. This property has relation to “Time set by ON timer” and “Relative ON timer setting”.

Reservation ON=0x41, OFF=0x42.

This property shall be effective even when the value of operation status property (0x80) is OFF (0x31).

(14) Time set by ON timer

This property indicates the ON time of the heat source equipment by hours: 0x00 to 0x17 (0 to 23) and minutes: 0x00 to 0x3B (0 to 59) when “ON timer reservation setting” is ON. The property value shall sequentially indicate the hour and minute, beginning with the high-order byte.

This property shall be effective even when the value of operation status property (0x80) is OFF (0x31).

(15) Relative ON timer setting



© 2000 - 2023 ECHONET Consortium

This property indicates the ON time of the heat source equipment by relative time from the current time. The data format is hours: 0x00 to 0x17 (0 to 23) and minutes: 0x00 to 0x3B (0 to 59) when “ON timer reservation setting” is ON. The property value shall sequentially indicate the hour and minute, beginning with the high-order byte.

This property shall be effective even when the value of operation status property (0x80) is OFF (0x31).

(16) OFF timer reservation setting

Sets reservation ON/OFF of the OFF timer. This property has relation to “Time set by OFF timer” and “Relative OFF timer setting”.

Reservation ON=0x41, OFF=0x42.

This property shall be effective even when the value of operation status property (0x80) is OFF (0x31).

(17) Time set by OFF timer

This property indicates the OFF time of the heat source equipment by hours: 0x00 to 0x17 (0 to 23) and minutes: 0x00 to 0x3B (0 to 59) when “OFF timer reservation setting” is ON. The property value shall sequentially indicate the hour and minute, beginning with the high-order byte.

This property shall be effective even when the value of operation status property (0x80) is OFF (0x31).

(18) Relative OFF timer setting

This property indicates the OFF time of the heat source equipment by relative time from the current time when “OFF timer reservation setting” is ON. The data format is hours: 0x00 to 0x17 (0 to 23) and minutes: 0x00 to 0x3B (0 to 59). The property value shall sequentially indicate the hour and minute, beginning with the high-order byte.

This property shall be effective even when the value of operation status property (0x80) is OFF (0x31).

(19) Measured instantaneous power consumption (property inherited from the device object super class)

This property indicates the instantaneous power consumption of heat source equipment in units of watts. The value range for this property shall be 0x0000-0xFFFD. When the property value of an actual device is higher than the property value range, overflow code 0xFFFF shall be used. When the property value of an actual device is lower than the property value range, underflow code 0xFFFE shall be used.

With heat source equipment, when there is more than one class or instance inside a single node, the measured instantaneous power consumption for the whole node may be returned as a common value for any class or instance.



© 2000 - 2023 ECHONET Consortium

This property is related to “Power consumption measurement method”.

(20) Measured cumulative electric energy consumption (property inherited from the device object super class)

This property indicates the cumulative electric energy consumption of heat source equipment in units of 0.001kWh. The value range for this property shall be 0x00000000-0x3B9AC9FF (0-999,999.999kWh). When the measured cumulative energy consumption overflows, the property value shall be incremented again from 0x00000000.

With heat source equipment, when there is more than one class or instance inside a single node, the measured cumulative electric energy consumption for the whole node may be returned as a common value for any class or instance.

This property is related to “Power consumption measurement method”.

(21) Rated power consumption

This property indicates the rated power consumption (catalog value) of each operating mode of a heater (hot water) / cooler (cold water) in units of watts. Power consumption in each operating mode is 0x0000-0xFFFD (0-65533), and the property value is taken from the upper bytes in the order of heater (hot water) / cooler (cold water).

When the property value of an actual device is higher than the property value range, overflow code 0xFFFF shall be used. When lower than the property value range, underflow code 0xFFFE shall be used.

If the actual device does not support any of the operating modes as a function, underflow code 0XFFFE shall be used.

This property shall be guaranteed effective even when the operation status property (0x80) is OFF (0x31).

When using more than one class or instance inside a single node, the rated power consumption for the whole node may be returned as a common value for any class or instance.

This property is related to “Power consumption measurement method”.

(22) Power consumption measurement method

This property indicates the method of measuring “Measured instantaneous power consumption”, “Measured cumulative electric energy consumption” and “Rated power consumption”.

If returning common values inside the same node (if returning a common value for more than one class or instance inside the node), the node unit shall be 0x41.

If returning common values inside the same class (if returning a common value for more than one instance inside the class), the class unit shall be 0x42. Note that the acquirable value is the value for the class in question, and that the total of values for each class is not necessarily the value for the whole node.

If returning different values for each instance, the instance unit shall be 0x43. Note that the



© 2000 - 2023 ECHONET Consortium

acquirable value is the value for the instance in question, and that the total of values for each instance is not necessarily the value for the whole node.

This property is related to “Measured instantaneous power consumption”, “Measured cumulative electric energy consumption” and “Rated power consumption”.

When this property is not installed, the method of measuring “Measured instantaneous power consumption”, “Measured cumulative electric energy consumption” and “Rated power consumption” shall be based on the instance unit.



© 2000 - 2023 ECHONET Consortium

## 3. 3. 15 Requirement for floor heater class

Class group code : 0x02

Class code : 0x7B

Instance code : 0x01–0x7F (0x00: All-instance specification code)

| Property name | EPC | Contents of property | Data type | Data size | Unit | Access rule | Man-datory | Announce-ment at status change | Remark |
|---|---|---|---|---|---|---|---|---|---|
| | | Value range (decimal notation) | | | | | | | |
| Operation status | 0x80 | This property indicates the ON/OFF status. | unsigned char | 1 byte | — | Set | ○ | ○ | |
| | | ON=0x30, OFF=0x31 | | | | Get | ○ | | |
| Temperature setting 1 | 0xE0 | This property indicates set temperature | unsigned char | 1 byte | °C | Set/Get | ○ | | Note1 |
| | | 0x00-0x32 (0-50°C)<br>Automatic=0x41 | | | | | | | |
| Temperature setting 2 | 0xE1 | This property indicates set temperature level by 15 steps | unsigned char | 1 byte | — | Set/Get | ○ | | Note1 |
| | | 0x31-0x3F<br>0x31 indicates the minimum level,<br>0x3F indicates the maximum level<br>Automatic=0x41 | | | | | | | |
| Temperature setting 2 – Maximum settable level | 0xD1 | The maximum settable level is the top step of temperature setting 2 | unsigned char | 1 byte | — | Get | | ○ | |
| | | 0x31–0x3F | | | | | | | |
| Measured room temperature | 0xE2 | Measured room temperature | signed char | 1 byte | °C | Get | | | |
| | | 0x81–0x7D (-127–125°C) | | | | | | | |
| Measured floor temperature | 0xE3 | Measured floor temperature | signed char | 1 byte | °C | Get | | | |
| | | 0x81–0x7D (-127–125°C) | | | | | | | |
| Zone change setting | 0xE4 | Sets the target zone for control and gets the number of controllable zones | unsigned char | 1 byte | | Set/Get | | | |
| | | b0–b7 is allocated to 0 to 7<br>Each bit 1: with control, 0: without control | | | | | | | |
| Special operation setting | 0xE5 | Sets Normal Operation/modest operation/high power operation and gets the status | unsigned char | 1 byte | — | Set/Get | | | |
| | | Normal Operation=0x41, modest operation=0x42、high power operation=0x43 | | | | | | | |
| Daily timer setting | 0xE6 | Daily timer ON/OFF<br>Up to 2 kinds of timers can be used | unsigned char | 1 byte | — | Set/Get | | | |
| | | Timer OFF=0x40, timer 1=0x41, timer 2=0x42 | | | | | | | |
| Daily timer setting 1 | 0xE7 | Time set by daily timer | unsigned char × 6 | 6 bytes | — | Set/Get | | | |
| | | Set the time in the unit of 30 minutes, dividing 24 hours by 30 minutes and allocated to 6 bytes.<br>Each bit 1: worked 0: stopped | | | | | | | |
| Daily timer | 0xE8 | Time set by daily timer | unsigned | 6 | — | Set/Get | | | |



© 2000 - 2023 ECHONET Consortium

| | | | | | | | | | |
|---|---|---|---|---|---|---|---|---|---|
| setting 2 | | Set the time in the unit of 30 minutes, dividing 24 hours by 30 minutes and allocated to 6 bytes.<br>Each bit 1: worked 0: stopped | char × 6 | bytes | | | | | |
| ON timer reservation setting | 0x90 | Reservation ON/OFF<br>ON=0x41, OFF=0x42 | unsigned char | 1 byte | — | Set/Get | | | |
| Time set by ON timer | 0x91 | Timer value HH:MM<br>0–0x17: 0–0x3B<br>(=0–23):(=0–59) | unsigned char × 2 | 2 bytes | — | Set/Get | | | |
| Relative ON timer setting | 0x92 | Timer value HH:MM<br>0–0x17: 0–0x3B<br>(=0–23):(=0–59) | unsigned char × 2 | 2 byte | — | Set/Get | | | |
| OFF timer reservation setting | 0x94 | Reservation ON/OFF<br>ON=0x41, OFF=0x42 | unsigned char | 1 byte | — | Set/Get | | | |
| Time set by OFF timer | 0x95 | Timer value HH:MM<br>0–0x17: 0–0x3B<br>(=0–23):(=0–59) | unsigned char × 2 | 2 bytes | — | Set/Get | | | |
| Relative OFF timer setting | 0x96 | Timer value HH:MM<br>0–0x17: 0–0x3B<br>(=0–23):(=0–59) | unsigned char × 2 | 2 bytes | — | Set/Get | | | |
| Measured instantaneous power consumption | 0x84 | This property indicates the instantaneous power consumption of a device in watts<br>0x0000-0xFFFD (0-65533) | unsigned short | 2 bytes | W | Get | | | |
| Measured cumulative electric energy consumption | 0x85 | This property indicates the cumulative energy consumption of a device in units of 0.001kWh<br>0x00000000-0x3B9AC9FF<br>(0-999,999.999) | unsigned long | 4 bytes | kWh | Get | | | |
| Rated power consumption | 0xE9 | This property indicates the rated power consumption in watts<br>0x0000-0xFFFD (0-65533W) | unsigned short | 2 bytes | W | Get | | | |
| Power consumption measurement method | 0xEA | This property indicates the method of measuring instantaneous power consumption, cumulative electric energy consumption and rated power consumption<br>Node unit = 0x41<br>Class unit = 0x42<br>Instance unit = 0x43 | unsigned char | 1 byte | — | Get | | | |

Note: In the “Announcement at status change” column, ○ denotes mandatory processing when the property is implemented.

Note1: Either “Temperature setting 1 EPC:0xE0” or “Temperature setting 2 EPC:0xE1” must be specified.

(1) Operation status (inherited from device object super class property)

This property indicates ON/OFF of the floor heater. ON/OFF shall correspond to the property



© 2000 - 2023 ECHONET Consortium

value of 0x030/0x31. The access rule "Set" must be implemented for floor heaters.

(2) Temperature setting 1

This property indicates the setting value of temperature in degrees in Celsius and sets the property values to be 0°C to 50°C (0x00 to 0x32).

When this property indicates an automatic operation worked by an algorithm of automatic temperature setting of the floor heater, Automatic=0x41 (automatic temperature) is set.

The temperature means that is controlled by the floor heater (room temperature, floor temperature, etc.) and either kind of temperature can be controlled here.

This property shall be effective even when the value of operation status property (0x80) is OFF (0x31).

Either this property or Temperature setting 2 (0xE1) must be implemented.

(3) Temperature setting 2

This property indicates the setting value of temperature by 15 steps and the property value is 0x31 to 0x3F. Each temperature level does not specify the figures in Celsius, and shall indicate 0x31 for the minimum temperature and 0x3F for the maximum temperature.

When this property indicates an automatic operation worked by an algorithm of automatic temperature setting of the floor heater, Automatic=0x41 (automatic temperature) is set.

This property shall be effective even when the value of operation status property (0x80) is OFF (0x31).

Either this property or Temperature setting 1 (0xE0) must be implemented.

When implementing "temperature setting 2 - Maximum settable level", the minimum value shall be 0x31 and the maximum value shall be the temperature setting 2 - Maximum settable level. When "temperature setting 2" is in Automatic status, the contents of the temperature setting 2 - Maximum settable level shall become invalid.

(4) Temperature setting 2 – Maximum settable level

This property indicates the maximum value of acceptable water temperature setting 2. Specifies the minimum value as 0x31 and the maximum value as 0x3F. Specific values of each level are not specified.

This property changes according to connected floor heater controllers and user operations. The floor heater controllers and timing of the change are not stipulated.

This property relates to "temperature setting 2" property. When "temperature setting 2" is in Automatic status, the contents of the temperature setting 2 - Maximum settable level shall become invalid.

(5) Measured room temperature



© 2000 - 2023 ECHONET Consortium

This property indicates the measured room temperature in Celsius. The range of the property value shall be -127 to 125°C (0x81 to 0x7D). The property value shall be used the overflow code 0x7F when the measured property value is over the range, and shall be used the underflow code 0x80 when the measured property value is less the range. 0x7E shall be used when the measured value cannot be returned. This property shall be effective even when the value of operation status property (0x80) is OFF (0x31).

(6) Measured floor temperature

This property indicates the measured temperature in Celsius. The range of the property value shall be -127 to 125°C (0x81 to 0x7D). The property value shall be used the overflow code 0x7F when the measured property value is over the range, and shall be used the underflow code 0x80 when the measured property value is less the range. 0x7E shall be used when the measured value cannot be returned.

(7) Zone change setting

Sets the target zone and gets the controllable zone when the target floor is divided into zones. The maximum number of zones for the floor is 8 and each zone is explained by a bit map. The b0 to b7 is allocated to the zone 0 to 7. Each bit shall be 1: with control and 0: without control.

This property shall be effective even when the value of operation status property (0x80) is OFF (0x31).

When setting other properties such as Operation status (0x80) or Temperature setting 1 (0xE0) for each zone or acquiring the setting status, instances may be allocated to each zone.

(8) Special operation setting

Sets normal/modest/high power operation and gets the status. This property corresponds to the property value of 0x41/0x42/0x43.

The modest operation temporarily controls at a lower temperature for the temperature setting value at night or at the time of absent. The high power operation temporarily controls at a higher temperature for the water temperature setting value.

(9) Daily timer setting

Sets ON/OFF of the daily timer and gets the status.

2 kinds of daily timers can be used (for weekdays or holidays, for example).

Timer OFF: 0x40, timer 1 ON: 0x41, timer 2 ON: 0x42.

This property shall be effective even when the value of operation status property (0x80) is OFF (0x31).

(10) Daily timer setting 1



© 2000 - 2023 ECHONET Consortium

(11) Daily timer setting 2

Set the setting values of the timer 1 and the timer 2 for “daily time setting” and get the status respectively.

24 hours is divided by 30 minutes. The timer is set in the unit of 30 minutes and allocated 6 bytes. 1:operated or 0:stopped is indicated for each bit.

This property shall be effective even when the value of operation status property (0x80) is OFF (0x31).

The 1st byte

| b0 | b1 | b2 | b3 | b4 | b5 | b6 | b7 |
|---|---|---|---|---|---|---|---|
| 0:00<br>-0:29 | 0:30<br>-0:59 | 1:00<br>-1:29 | 1:30<br>-1:59 | 2:00<br>-2:29 | 2:30<br>-2:59 | 3:00<br>-3:29 | 3:30<br>-3:59 |

The 2nd byte

| b0 | b1 | b2 | b3 | b4 | b5 | b6 | b7 |
|---|---|---|---|---|---|---|---|
| 4:00<br>-4:29 | 4:30<br>-4:59 | 5:00<br>-5:29 | 5:30<br>-5:59 | 6:00<br>-6:29 | 6:30<br>-6:59 | 7:00<br>-7:29 | 7:30<br>-7:59 |

The 3rd byte

| b0 | b1 | b2 | b3 | b4 | b5 | b6 | b7 |
|---|---|---|---|---|---|---|---|
| 8:00<br>-8:29 | 8:30<br>-8:59 | 9:00<br>-9:29 | 9:30<br>-9:59 | 10:00<br>-10:29 | 10:30<br>-10:59 | 11:00<br>-11:29 | 11:30<br>-11:59 |

The 4th byte

| b0 | b1 | b2 | b3 | b4 | b5 | b6 | b7 |
|---|---|---|---|---|---|---|---|
| 12:00<br>-12:29 | 12:30<br>-12:59 | 13:00<br>-13:29 | 13:30<br>-13:59 | 14:00<br>-14:29 | 14:30<br>-14:59 | 15:00<br>-15:29 | 15:30<br>-15:59 |

The 5th byte

| b0 | b1 | b2 | b3 | b4 | b5 | b6 | b7 |
|---|---|---|---|---|---|---|---|
| 16:00<br>-16:29 | 16:30<br>-16:59 | 17:00<br>-17:29 | 17:30<br>-17:59 | 18:00<br>-18:29 | 18:30<br>-18:59 | 19:00<br>-19:29 | 19:30<br>-19:59 |

The 6th byte

| b0 | b1 | b2 | b3 | b4 | b5 | b6 | b7 |
|---|---|---|---|---|---|---|---|
| 20:00<br>-20:29 | 20:30<br>-20:59 | 21:00<br>-21:29 | 21:30<br>-21:59 | 22:00<br>-22:29 | 22:30<br>-22:59 | 23:00<br>-23:29 | 23:30<br>-23:59 |

(12) ON timer reservation setting

Sets reservation ON/OFF of the ON timer. This property has relation to “Time set by ON timer” and “Relative ON timer setting”.

Reservation ON=0x41, OFF=0x42.

This property shall be effective even when the value of operation status property (0x80) is OFF (0x31).

(13) Time set by ON timer



© 2000 - 2023 ECHONET Consortium

This property indicates the ON time of the floor heater by hours: 0x00 to 0x17 (0 to 23) and minutes: 0x00 to 0x3B (0 to 59) when “ON timer reservation setting” is ON. The property value shall sequentially indicate the hour and minute, beginning with the high-order byte

This property shall be effective even when the value of operation status property (0x80) is OFF (0x31).

(14) Relative ON timer setting

This property indicates the ON time of the floor heater by relative time from the current time. The data format is hours: 0x00 to 0x17 (0 to 23) and minutes: 0x00 to 0x3B (0 to 59) when “ON timer reservation setting” is ON. The property value shall sequentially indicate the hour and minute, beginning with the high-order byte

This property shall be effective even when the value of operation status property (0x80) is OFF (0x31).

(15) OFF timer reservation setting

Sets reservation ON/OFF of the OFF timer. This property has relation to “Time set by OFF timer” and “Relative OFF timer setting”.

Reservation ON=0x41, OFF=0x42.

This property shall be effective even when the value of operation status property (0x80) is OFF (0x31).

(16) Time set by OFF timer

This property indicates the OFF time of the floor heater by hours: 0x00 to 0x17 (0 to 23) and minutes: 0x00 to 0x3B (0 to 59) when “OFF timer reservation setting” is ON. The property value shall sequentially indicate the hour and minute, beginning with the high-order byte

This property shall be effective even when the value of operation status property (0x80) is OFF (0x31).

(17) Relative OFF timer setting

This property indicates the OFF time of the floor heater by relative time from the current time when “OFF timer reservation setting” is ON. The data format is hours: 0x00 to 0x17 (0 to 23) and minutes: 0x00 to 0x3B (0 to 59). The property value shall sequentially indicate the hour and minute, beginning with the high-order byte

This property shall be effective even when the value of operation status property (0x80) is OFF (0x31).

(18) Measured instantaneous power consumption (property inherited from the device object super class)

Expresses the instantaneous power consumption of the floor heater in units of watts. The value



© 2000 - 2023 ECHONET Consortium

range for this property shall be 0x0000-0xFFFD. When the property value of the actual device is higher than the property value range, overflow code 0xFFFF shall be used. When the property value of the actual device is lower than the property value range, underflow code 0xFFFE shall be used.

With floor heaters, if there is more than one class or instance inside a single node, the measured instantaneous power consumption for the whole node may be returned as a common value for any class or instance.

This property is related to “Power consumption measurement method”.

(19) Measured cumulative electric energy consumption (property inherited from the device object super class)

Expresses the cumulative electric energy consumption of the floor heater in units of 0.001kWh. The value range for this property shall be 0x00000000-0x3B9AC9FF (0-999,999.999kWh). When the measured cumulative electric energy consumption overflows, the property value shall be incremented again from 0x00000000.

With floor heaters, if there is more than one class or instance inside a single node, the measured cumulative electric energy consumption for the whole node may be returned as a common value for any class or instance.

This property is related to “Power consumption measurement method”.

(20) Rated power consumption

This property indicates the rated power consumption (catalog value) in watts. The value range for this property shall be 0x0000-0xFFFD (0-65533). When the property value of the actual device is higher than the property value range, overflow code 0xFFFF shall be used. When lower than the property value range, underflow code 0xFFFE shall be used.

This property shall be guaranteed effective even when the operation status property (0x80) is OFF (0x31).

When using more than one class or instance inside a single node (such as when the target floor is divided into zones for control), the rated power consumption for the whole node may be returned as a common value for any class or instance.

This property is related to “Power consumption measurement method”.

(21) Power consumption measurement method

This property indicates the method of measuring “Measured instantaneous power consumption”, “Measured cumulative electric energy consumption” and “Rated power consumption”. If returning common values inside the same node (if returning a common value for more than one class or instance inside the node), the node unit shall be 0x41.

If returning common values inside the same class (if returning a common value for more than one instance inside the class), the class unit shall be 0x42. Note that the acquirable value is the



© 2000 - 2023 ECHONET Consortium

value for the class in question, and that the total of values for each class is not necessarily the value for the whole node.

If returning different values for each instance, the instance unit shall be 0x43. Note that the acquirable value is the value for the instance in question, and that the total of values for each instance is not necessarily the value for the whole node.

This property is related to “Measured instantaneous power consumption”, “Measured cumulative electric energy consumption” and “Rated power consumption”.

When this property is not installed, the method of measuring “Measured instantaneous power consumption”, “Measured cumulative electric energy consumption” and “Rated power consumption” shall be based on the instance unit.



© 2000 - 2023 ECHONET Consortium

# 3. 3. 16 Requirements for fuel cell class

Class group code : 0x02

Class code : 0x7C

Instance code : 0x01–0x7F (0x00: All-instance specification code)

| Property name | EPC | Contents of property<br>Value range (decimal notation) | Data type | Data size | Unit | Access rule | Man-datory | Announcement at status change | Remark |
|---|---|---|---|---|---|---|---|---|---|
| Operation status | 0x80 | This property indicates the ON/OFF status.<br>ON=0x30, OFF=0x31 | unsigned char | 1 byte | – | Set<br>Get | <br>○ | ○ | |
| Measured temperature of water in water heater | 0xC1 | This property indicates the current temperature of the water in the water heater in °C.<br>0x00–0x64 (0–100°C) | unsigned char | 1 byte | °C | Get | | | |
| Rated power generation output | 0xC2 | This property indicates the rated power generation output in watts.<br>0x0000–0xFFFD<br>(0–65,533W) | unsigned short | 2 bytes | W | Get | ○ | | |
| Heating value of hot water storage tank | 0xC3 | This property indicates the heating value of the hot water storage tank in MJ.<br>0x0000–0xFFFD<br>(0–65,533MJ) | unsigned short | 2 bytes | MJ | Get | | | |
| Measured instantaneous power generation output | 0xC4 | This property indicates the instantaneous power generation output in watts.<br>0x0000–0xFFFD<br>(0–65,533W) | unsigned short | 2 bytes | W | Get | ○ | | |
| Measured cumulative energy generation output | 0xC5 | This property indicates the cumulative energy generation output in units of 0.001kWh.<br>0x00000000–0x3B9AC9FF<br>(0–999,999.999kWh) | unsigned long | 4 bytes | 0.001 kWh | Get | ○ | | |
| Cumulative energy generation output reset setting | 0xC6 | Resets the cumulative energy generation output by writing 0x00.<br>Reset=0x00 | unsigned char | 1 byte | — | Set | | | |
| Measured instantaneous gas consumption | 0xC7 | This property indicates the instantaneous gas consumption in units of 0.001$m^3$/h.<br>0x0000–0xFFFD<br>(0–65.533$m^3$/h) | unsigned short | 2 bytes | 0.001 $m^3$/h | Get | | | |
| Measured cumulative gas consumption | 0xC8 | This property indicates the cumulative gas consumption in units of 0.001$m^3$.<br>0x00000000–0x3B9AC9FF<br>(0–999,999.999$m^3$) | unsigned long | 4 bytes | 0.001 $m^3$ | Get | | | |
| Cumulative gas consumption reset setting | 0xC9 | Resets the cumulative gas consumption by writing 0x00.<br>Reset=0x00 | unsigned char | 1 byte | — | Set | | | |



© 2000 - 2023 ECHONET Consortium

| | | | | | | | | | |
|---|---|---|---|---|---|---|---|---|---|
| Power generation setting | 0xCA | This property indicates the setting of start or stop of power generation.<br>Power generation ON=0x41,<br>Power generation OFF=0x42 | unsigned char | 1 byte | — | Set/Get | | | |
| Power generation status | 0xCB | This property indicates the power generation status.<br>generating =0x41, stopped=0x42, starting=0x43, stopping=0x44, idling=0x45 | unsigned char | 1 byte | — | Get | ○ | ○ | |
| Measured in-house instantaneous power consumption | 0xCC | This property indicates the measured in-house instantaneous power consumption in watts.<br>0x0000-0xFFFD (0-65,533W) | unsigned short | 2 bytes | W | Get | | | |
| Measured in-house cumulative energy consumption | 0xCD | This property indicates the measured in-house cumulative energy consumption in units of 0.001kWh.<br>0x00000000-0x3B9AC9FF<br>(0-999,999.999kWh) | unsigned long | 4 bytes | 0.001 kWh | Get | | | |
| In-house cumulative energy consumption reset | 0xCE | By setting 0 to this property, the measured in-house cumulative energy consumption is reset.<br>Reset=0x00 | unsigned char | 1 byte | | Set | | | |
| System interconnection status | 0xD0 | This property indicates the status of interconnection with the system.<br>System interconnected (reverse power flow acceptable)=0x00, Independent=0x01, System interconnected (reverse power flow not acceptable)=0x02 | unsigned char | 1 byte | — | Get | ○ | | |
| Power generation request time setting | 0xD1 | Start times and end times that are requested power generation by fuel cells shall be listed.<br>Start time: End time:<br>0-0x17:0-0x3B:0-0x17: 0–0x3B<br>(=0-23):(=0-59):(=0-23):(=0-59)<br>When not set: 0xFFFFFFFF | unsigned char x 4 | 4 bytes | | Set/Get | ○ | | |
| Designated power generation status | 0xD2 | Used to specify the power generation method when a fuel cell generates power within the power generation requested time.<br>Power generation at the maximum rating: 0x41<br>Load following power generation: 0x42 | unsigned char | 1 byte | | Set/Get | ○ | | |
| Measured remaining hot water amount | 0xE1 | This property indicates the measured amount of remaining hot water in liters.<br>0x0000–0xFFFD (0–65,533 liters) | unsigned short | 2 bytes | liter | Get | | | |
| Tank capacity | 0xE2 | This property indicates the tank capacity in liters.<br>0x0000–0xFFFD (0–65,533 liters) | unsigned short | 2 bytes | liter | Get | | | |

Note: In the “Announcement at status change” column, ○ denotes mandatory processing when the property is implemented.

(1) Operation status (a property inherited from the device object super class)



© 2000 - 2023 ECHONET Consortium

This property indicates whether the functions specific to this class are operating (ON) or not (OFF). In the case of a node in which this class is implemented and the functions specific to this class start operating upon startup of the node, this property may be implemented with the value fixed at 0x30 (operation status ON).

(2) Measured temperature of water in water heater

This property indicates the current hot water temperature in the hot water storage tank in °C. The property value range is 0x00 to 0x64 (0 to 100°C).

(3) Rated power generation output

This property indicates the rated power generation output in watts. The property value range is 0x0000 to 0xFFFD. When the property value of the actual device is higher than the upper bound of the value range, 0xFFFF (overflow code) shall be used. When the property value of the actual device is lower than the lower bound of the value range, 0xFFFE (underflow code) shall be used.

(4) Heating value of hot water storage tank

This property indicates the heating value of the hot water storage tank in MJ. The property value range is 0x0000 to 0xFFFD. When the property value of the actual device is higher than the upper bound of the value range, 0xFFFF (overflow code) shall be used. When the property value of the actual device is lower than the lower bound of the value range, 0xFFFE (underflow code) shall be used.

(5) Measured instantaneous power generation output

This property indicates the instantaneous power generation output in watts. The property value range is 0x0000 to 0xFFFD. When the property value of the actual device is higher than the upper bound of the value range, 0xFFFF (overflow code) shall be used. When the property value of the actual device is lower than the lower bound of the value range, 0xFFFE (underflow code) shall be used.

(6) Measured cumulative energy generation output

This property indicates the cumulative energy generation output in units of 0.001kWh. The property value range is 0x00000000 to 0x3B9AC9FF (0 to 999,999.999 kWh). In case the cumulative energy generation output goes overflow, the measured cumulative energy generation output shall be restarted from 0x00000000.

(7) Cumulative energy generation output reset setting

Resets the cumulative energy generation output to zero by setting 0x00.



© 2000 - 2023 ECHONET Consortium

(8) Measured instantaneous gas consumption

This property indicates the instantaneous gas consumption in units of 0.001m$^3$/h. The property value range is 0x0000 to 0xFFFD (0 to 65.533m$^3$/h). When the property value of the actual device is higher than the upper bound of the value range, 0xFFFF (overflow code) shall be used. When the property value of the actual device is lower than the lower bound of the value range, 0xFFFE (underflow code) shall be used.

(9) Measured cumulative gas consumption

This property indicates the cumulative gas consumption in units of 0.001 m$^3$. The property value range is 0x00000000 to 0x3B9AC9FF (0 to 999,999.999 m$^3$). In the event of a cumulative gas consumption overflow, the counting of the cumulative gas consumption shall be restarted from 0x00000000.

(10) Cumulative gas consumption reset setting

Resets the cumulative gas consumption to zero by setting 0x00.

(11) Power generation setting

This property indicates the setting of power generation by the fuel cell. The property value for power generation ON is 0x41, and the property value for power generation OFF is 0x42.

(12) Power generation status

This property indicates the power generation status of the fuel cell. The property value for generating is 0x41, the property value for stopped is 0x42, the property value for starting is 0x43, the property value for stopping is 0x44 and the property value for idling is 0x45.

(13) Measured in-house instantaneous power consumption

This property indicates the in-house instantaneous power consumption in watts. The property value range is 0x0000 to 0xFFFD. When the property value of the actual device is higher than the value range of this property, the overflow code 0xFFFF shall be used. When the property value is lower than the value range of this property, the underflow code 0xFFFE shall be used.

In-house instantaneous power consumption is the sum of power where an anti-reverse power flow CT is installed and the power output.

(14) Measured in-house cumulative energy consumption

This property indicates the in-house cumulative energy consumption in units of 0.001kWh. The



© 2000 - 2023 ECHONET Consortium

property value range is 0x00000000 to 0x3B9AC9FF (0 to 999,999.999kWh) and increments again from 0x00000000 in case of a cumulative energy consumption overflow.
In-house cumulative energy consumption is a sum of the cumulative energy at the reverse power flow protection CT and the cumulative energy of the generated energy output.

(15) In-house cumulative energy consumption reset

By setting 0x00 to this property, the in-house cumulative energy consumption is reset to zero.

(16) System interconnection status

This property indicates the current status of interconnection with the system.
System interconnected (reverse power flow acceptable) = 0x00, Independent = 0x01,
System interconnected (reverse power flow not acceptable) = 0x02.
Note that “reverse power flow acceptable” shall mean that a fuel cell is set to allow reverse power flow, while “reverse power flow not acceptable” shall mean that a fuel cell is set to not allow reverse power flow.

(17) Power generation request time setting

The time that a fuel cell generates power is determined based on the fuel cell’s control algorithm. However, the time to request power generation (start time and end time) shall be set to fuel cells using this property. Note that power may not be always generated even in during the power generation request time, due to power usage status, the amount of hot water remaining in the tank, or device protection. Especially when the fuel cell has not been started, it is recommended to set a start time after a certain amount of time has elapsed, considering the start-up time of the fuel cell.
This property value shall have a list of start times and end times. When the value of this property has not been set the value shall be set to “0xFFFFFFFF” (not set). The property value for the fuel cell shall be set to “not set” when reaching the end time.
When a start time is set to a time earlier than the current time, the fuel cell shall interpret the start time as being for the following day. When an end time is set to a time earlier than the start time, the fuel cell shall interpret the end time as being for the following day.
Note that the fuel cell shall determine whether to generate or not, for a time other than the power generation request time.

(18) Designated power generation status

When a fuel cell generates power during the time set by “power generation request time setting property”, it shall set whether it generates power at maximum rating or load following. Then, setting status shall be acquired. Note, however, that “power generation at maximum rating” shall



© 2000 - 2023 ECHONET Consortium

be set only when the value of the system interconnection status property is “system interconnected (reverse power flow acceptable)”.

Note that power may not always be generated at maximum rating under certain conditions, since the fuel cell determines the amount of power to be generated (including whether generates power or not). These conditions include the amount of hot water remaining in the tank, reverse power flow acceptable or not, and power usage status of users.

(19) Measured remaining hot water amount

This property indicates the amount of hot water remaining in the tank in liters. The property value range is 0x0000 to 0xFFFD (0 to 65,533 liters). When the property value of the actual device is higher than the upper bound of the value range, 0xFFFF (overflow code) shall be used. When the property value of the actual device is lower than the lower bound of the value range, 0xFFFE (underflow code) shall be used.

(20) Tank capacity

This property indicates the tank capacity in liters. The property value range is 0x0000 to 0xFFFD (0 to 65,533 liters). When the property value of the actual device is higher than the upper bound of the value range, 0xFFFF (overflow code) shall be used. When the property value of the actual device is lower than the lower bound of the value range, 0xFFFE (underflow code) shall be used.



© 2000 - 2023 ECHONET Consortium

# 3. 3. 17 Requirements for storage battery class

Class group code : 0x02

Class code : 0x7D

Instance code : 0x01–0x7F (0x00: All-instance specification code)

| Property name | EPC | Contents of property<br>Value range (decimal notation) | Data type | Data size | Unit | Access rule | Mandatory | Announcement at status change | Remark |
|---|---|---|---|---|---|---|---|---|---|
| Operation status | 0x80 | This property indicates the ON/OFF status.<br>ON = 0x30, OFF = 0x31 | unsigned char | 1 byte | | Set<br>Get | <br>○ | ○ | |
| Identification number | 0x83 | A number that allows each object to be uniquely identified.<br>First byte: lower-layer communication ID field<br>0x01 - 0xFD:<br>If a unique number is assigned by the lower-layer communication protocols, an arbitrary ID number is set according to the protocol types. (not used in ECHONET Lite).<br>0x11 to 0x1F: Power line Communication Protocol a and d systems<br>0x31 to 0x3F: Low-Power Radio Communication Protocol<br>0x41 to 0x4F: Extended HBS<br>0x51 to 0x5F: IrDA<br>0x61 to 0x6F: LonTalk<br>0x71 to 0x7F: Bluetooth<br>0x81 to 0x8F: Ethernet<br>0x91 to 0x9F: IEEE802.11/11b<br>0xA1: Power line Communication Protocol c systems<br>0xB1: IPv6/Ethernet<br>0xB2: IPv6/6LoWPAN<br>0xFE: 2nd-17th bytes are defined by the manufacturer according to the product type. (Refer to the detailed explanation.)<br>0xFF: This ID number is used if 2nd-9th bytes are randomly generated by the lower-layer communication protocols.<br>0x00: Identification number is not set.<br>Second and succeeding bytes: unique number field | unsigned char | 9 or 17 bytes | — | Get | ○ | | |
| Fault description | 0x89 | Describes the fault.<br>ower-order byte of the fault description code<br>igher-order byte of the fault description code<br>See “(3) ‘Fault Description’ Property.” | unsigned short | 2 bytes | - | Get | ○ | | |
| Product code | 0x8C | Identifies the product using ASCII code.<br>(Defined by each manufacturer.) | unsigned char × 12 | 12 bytes | - | Get | ○ | | |



© 2000 - 2023 ECHONET Consortium

| | | | | | | | | | |
|---|---|---|---|---|---|---|---|---|---|
| Current time setting | 0x97 | Current time (HH: MM format)<br>0x00 to 0x17 : 0x00 to 0x3B<br>(0 to 23) : (0 to 59) | unsigned char×2 | 2 bytes | | Set/Get | ○ | | |
| Current date setting | 0x98 | Current date (YYYY: MM: DD format)<br>1 to 0x270F : 1 to 0x0C : 1 to 0x1F<br>(=1 to 9999) : (=1 to 12) : (=1 to 31) | unsigned char×4 | 4 bytes | | Set/Get | ○ | | |
| AC effective capacity (charging) | 0xA0 | This property indicates the electric energy that can be charged from an empty storage battery (AC)<br>0x00000000 to 0x3B9AC9FF (0 to 999,999,999Wh) | unsigned long | 4 bytes | Wh | Get | ○ | | *1 |
| AC effective capacity (discharging) | 0xA1 | This property indicates the electric energy that can be discharged from a fully–charged storage battery (AC)<br>0x00000000 to 0x3B9AC9FF (0 to 999,999,999Wh) | unsigned long | 4 bytes | Wh | Get | ○ | | *1 |
| AC chargeable capacity | 0xA2 | This property indicates the electric energy that can be charged during a normal time (AC)<br>0x00000000 to 0x3B9AC9FF (0 to 999,999,999Wh) | unsigned long | 4 bytes | Wh | Get | ○ | | |
| AC dischargeable capacity | 0xA3 | This property indicates the electric energy that can be discharged during a normal time (AC)<br>0x00000000 to 0x3B9AC9FF (0 to 999,999,999Wh) | unsigned long | 4 bytes | Wh | Get | ○ | | |
| AC chargeable electric energy | 0xA4 | This property indicates the electric energy that can be charged at the present point in time (AC)<br>0x00000000 to 0x3B9AC9FF (0 to 999,999,999Wh) | unsigned long | 4 bytes | Wh | Get | ○ | | |
| AC dischargeable electric energy | 0xA5 | This property indicates the electric energy that can be discharged at the present point in time (AC)<br>0x00000000 to 0x3B9AC9FF (0 to 999,999,999Wh) | unsigned long | 4 bytes | Wh | Get | ○ | | |
| AC charge upper limit setting | 0xA6 | This property sets the upper limit value for charging in relation to chargeable capacity in % (AC)<br>0x00 to 0x64 (0 to 100%) | unsigned char | 1 byte | % | Set/Get | | | |
| AC discharge lower limit setting | 0xA7 | This property sets the lower limit value for discharging in relation to dischargeable capacity in % (AC)<br>0x00 to 0x64 (0 to 100%) | unsigned char | 1 byte | % | Set/Get | | | |
| AC cumulative charging electric energy | 0xA8 | This property indicates the cumulative charging electric energy (AC) in 0.001kW<br>0x00000000 to 0x3B9AC9FF (0 to 999,999.999kWh) | unsigned long | 4 bytes | 0.001 kWh | Get | ○ | | |
| AC cumulative discharging electric energy | 0xA9 | This property indicates the cumulative discharging electric energy (AC) in 0.001kWh<br>0x00000000 to 0x3B9AC9FF (0 to 999,999.999kWh) | unsigned long | 4 bytes | 0.001 kWh | Get | ○ | | |



© 2000 - 2023 ECHONET Consortium

| | | | | | | | | | |
|---|---|---|---|---|---|---|---|---|---|
| AC charge amount target value | 0xAA | This property indicates the electric energy for charging (AC) in Wh<br>0x00000000: Not set<br>0x00000001 to 0x3B9AC9FF (1 to 999,999,999Wh) | unsigned long | 4 bytes | Wh | Set/Get | ○ | ○ | |
| AC discharge amount target value | 0xAB | This property indicates the electric energy for discharging (AC) in Wh<br>0x00000000: Not set<br>0x00000001 to 0x3B9AC9FF (1 to 999,999,999Wh) | unsigned long | 4 bytes | Wh | Set/Get | ○ | ○ | |
| Charging method | 0xC1 | This property indicates charging method when setting charging (0x42) to operation mode setting (EPC = 0xDA). | unsigned char | 1 byte | － | Set | | ○ | |
| | | Maximum charging electric power charging = 0x01,<br>Surplus electric power charging = 0x02,<br>Designated electric power charging = 0x03,<br>Designated electric current charging = 0x04,<br>Others = 0x00 | | | | Get | ○ | | |
| Discharging method | 0xC2 | This property indicates discharging method when setting discharging (0x43) to operation mode setting (EPC = 0xDA). | unsigned char | 1 byte | － | Set | | ○ | |
| | | Maximum discharging electric power discharging = 0x01,<br>Load-following discharging: 0x02,<br>Designated electric power discharging = 0x03,<br>Designated electric current discharging = 0x04,<br>Others = 0x00 | | | | Get | ○ | | |
| Minimum/maximum charging electric power | 0xC8 | This property indicates the minimum/maximum electric power for charging in watts (AC).<br>0x00000000 to 0x3B9AC9FF<br>(0 to 999,999,999W)<br>Minimum : maximum | unsigned long × 2 | 8 bytes | W | Get | ○ | | |
| Minimum/maximum discharging electric power | 0xC9 | This property indicates the minimum/maximum electric power for discharging in watts (AC).<br>0x00000000 to 0x3B9AC9FF<br>(0 to 999,999,999W)<br>Minimum : maximum | unsigned long × 2 | 8 bytes | W | Get | ○ | | |
| Minimum/maximum charging current | 0xCA | This property indicates the minimum/maximum current for charging in units of 0.1A (AC).<br>0x0000 to 0x7FFE (0 to 3,276.6A)<br>Minimum : maximum | unsigned short × 2 | 4 bytes | 0.1A | Get | | | |
| Minimum/maximum discharging current | 0xCB | This property indicates the minimum/maximum current for discharging in units of 0.1A (AC).<br>0x0000 to 0x7FFE (0 to 3,276.6A)<br>Minimum : maximum | unsigned short × 2 | 4 bytes | 0.1A | Get | | | |



© 2000 - 2023 ECHONET Consortium

| | | | | | | | | | |
|---|---|---|---|---|---|---|---|---|---|
| Re-interconnection permission setting | 0xCC | This property sets permission and prohibition for interconnection to system.<br>Permitted = 0x41, Prohibited = 0x42 | unsigned char | 1 byte | — | Set/Get | | | |
| Operation permission setting | 0xCD | This property sets permission and prohibition for storage battery operation.<br>Permitted = 0x41, Prohibited = 0x42 | unsigned char | 1 byte | — | Set/Get | | | |
| Independent operation permission setting | 0xCE | This property sets permission and prohibition for independent operation of the storage battery.<br>Permitted = 0x41, Prohibited = 0x42 | unsigned char | 1 byte | — | Set/Get | | | |
| Working operation status | 0xCF | This property indicates the working operation status. The operation action statuses of charging status, discharging status and standby status are required.<br>Rapid charging = 0x41, Charging = 0x42, Discharging = 0x43, Standby = 0x44, Test = 0x45, Automatic＝0x46, Restart＝0x48, Effective capacity recalculation processing ＝0x49, Other = 0x40 | unsigned char | 1 byte | — | Get | ○ *6 | ○ | |
| AC rated electric energy | 0xC7 | This property indicates the rated electric energy of the storage battery in Wh (AC).<br>0x00000000 to 0x3B9AC9FF<br>(0 to 999,999,999Wh) | unsigned long | 4 bytes | Wh | Get | | | |
| Rated electric energy | 0xD0 | This property indicates the rated electric energy of the battery in Wh (DC).<br>0x00000000 to 0x3B9AC9FF<br>(0 to 999,999,999Wh) | unsigned long | 4 bytes | Wh | Get | | | |
| Rated capacity | 0xD1 | This property indicates the rated charging capacity of the battery in units of 0.1Ah (DC).<br>0x0000 to 0x7FFE (0 to 3,276.6Ah) | unsigned short | 2 bytes | 0.1Ah | Get | | | |
| Rated voltage | 0xD2 | This property indicates the rated voltage of the battery in volts (DC).<br>0x0000 to 0x7FFE (0 to 32,766V) | unsigned short | 2 bytes | V | Get | | | |
| Measured instantaneous charging/discharging electric power | 0xD3 | This property indicates the measured instantaneous charging/discharging electric power in watts (AC) (positive/negative).<br>0x00000001 to 0x3B9AC9FF (1 to 999,999,999W): during charging (positive value), 0xFFFFFFFF to 0xC4653601 (-1 to -999,999,999W): during discharging (negative value) | signed long | 4 bytes | W | Get | | | |
| Measured instantaneous charging/discharging current | 0xD4 | This property indicates the measured instantaneous charging/discharging current in units of 0.1A (AC) (positive/negative).<br>0x0001 to 0x7FFE (0.1 to 3,276.6A): during charging (positive value), 0xFFFF to 0x8001 (-0.1 to -3,276.7A): during discharging (negative value) | signed short | 2 bytes | 0.1A | Get | | | |
| Measured instantaneous charging/discharging voltage | 0xD5 | This property indicates the measured instantaneous charging/discharging voltage in volts (AC) (positive/negative).<br>0x0001 to 0x7FFE (1 to 32,766V): during charging (positive value), 0xFFFF to 0x8001 (-1 to -32,767V): during discharging (negative value) | signed short | 2 bytes | V | Get | | | |



© 2000 - 2023 ECHONET Consortium

| | | | | | | | | | |
|---|---|---|---|---|---|---|---|---|---|
| Measured cumulative discharging electric energy | 0xD6 | This property indicates the measured cumulative discharging electric energy in units of 0.001kWh.<br>0x00000000 to 0x3B9AC9FF<br>(0 to 999,999.999kWh) | unsigned long | 4 bytes | 0.001 kWh | Get | | | |
| Measured cumulative discharging electric energy reset setting | 0xD7 | Resets “Measured cumulative discharging electric energy” to zero.<br>Reset = 0x00 | unsigned char | 1 byte | — | Set | | | |
| Measured cumulative charging electric energy | 0xD8 | This property indicates the measured cumulative charging electric energy in units of 0.001kWh.<br>0x00000000 to 0x3B9AC9FF<br>(0 to 999,999.999kWh) | unsigned long | 4 bytes | 0.001 kWh | Get | | | |
| Measured cumulative charging electric energy reset setting | 0xD9 | Resets “Measured cumulative charging electric energy” to zero.<br>Reset = 0x00 | unsigned char | 1 byte | — | Set | | | |
| Operation mode setting | 0xDA | Sets the battery to one of the following operation modes: “Rapid charging,” “Charging,” “Discharging,” “Standby,” “Test,” “Automatic” or “Others.” The operation modes of charging, discharging and standby are required.<br>Rapid charging = 0x41, Charging = 0x42, Discharging = 0x43, Standby = 0x44, Test = 0x45, Automatic = 0x46, Restart＝0x48, Effective capacity recalculation processing ＝0x49, Others = 0x40 | unsigned char | 1 byte | — | Set/Get | ○<br>*6 | ○ | |
| System interconnection status | 0xDB | This property indicates the status of system interconnection.<br>System interconnected (reverse power flow acceptable) = 0x00, Independent = 0x01, System interconnected (reverse power flow not acceptable) = 0x02 | unsigned char | 1 byte | — | Get | ○ | | |
| Minimum/maximum charging electric power (Independent) | 0xDC | This property indicates the minimum and maximum values of charging power battery in watts (AC) in the dependent status.<br>0x00000000 to 0x3B9AC9FF<br>(0 to 999,999,999W)<br>Minimum charging power: Maximum charging power | unsigned long × 2 | 8 bytes | W | Get | | | |
| Minimum/maximum discharging electric power (Independent) | 0xDD | This property indicates the minimum and maximum values of discharging power from the battery in the independent status in watts (AC).<br>0x00000000 to 0x3B9AC9FF<br>(0 to 999,999,999W)<br>Minimum discharging power: Maximum discharging power | unsigned long × 2 | 8 bytes | W | Get | | | |
| Minimum/maximum charging current (Independent) | 0xDE | This property indicates the minimum and maximum values of a charging current to the battery in the independent status in units of 0.1A (AC). | unsigned short × 2 | 4 bytes | 0.1A | Get | | | |



© 2000 - 2023 ECHONET Consortium

| | | | | | | | | | |
|---|---|---|---|---|---|---|---|---|---|
| | | 0x0000 to 0x7FFE (0 to 3,276.6A)<br>Minimum charging current: Maximum charging current | | | | | | | |
| Minimum/maximum discharging current (Independent) | 0xDF | This property indicates the minimum and maximum values of a discharging current in the independent status in units of 0.1A (AC). | unsigned short × 2 | 4 bytes | 0.1A | Get | | | |
| | | 0x0000 to 0x7FFE (0 to 3,276.6A)<br>Minimum discharging current: Maximum discharging current | | | | | | | |
| Charging/discharging amount setting 1 | 0xE0 | Used to specify the charging/discharging electric energy in Wh (DC) (positive/negative). | signed long | 4 bytes | Wh | Set/Get | | | *3 |
| | | 0x00000001 to 0x3B9AC9FF (1 to 999,999,999Wh): during charging (positive value), 0xFFFFFFFF to 0xC4653601 (-1 to -999,999,999Wh): during discharging (negative value) | | | | | | | |
| Charging/discharging amount setting 2 | 0xE1 | Used to specify the charging/discharging capacity in units of 0.1Ah (DC) (positive/negative). | signed short | 2 bytes | 0.1Ah | Set/Get | | | *3 |
| | | 0x0001 to 0x7FFD (0.1 to 3,276.6Ah): during charging (positive value), 0xFFFF to 0x8001 (-0.1 to -3,276.7Ah): during discharging (negative value) | | | | | | | |
| Remaining stored electricity 1 | 0xE2 | This property indicates the remaining stored electric energy in Wh (DC). | unsigned long | 4 bytes | Wh | Get | ○ | | *2 |
| | | 0x00000000 to 0x3B9AC9FF<br>(0 to 999,999,999Wh) | | | | | | | |
| Remaining stored electricity 2 | 0xE3 | This property indicates the remaining capacity in units of 0.1Ah (DC). | unsigned short | 2 bytes | 0.1Ah | Get | ○ | | *2 |
| | | 0x0000 to 0x7FFE (0 to 3,276.6Ah) | | | | | | | |
| Remaining stored electricity 3 | 0xE4 | This property indicates the charging rate of the battery in %. | unsigned char | 1 byte | % | Get | ○ | | *2 |
| | | 0x00 to 0x64 (0 to 100%) | | | | | | | |
| Battery state of health | 0xE5 | This property indicates the battery state of health in %. | unsigned char | 1 byte | % | Get | | | |
| | | 0x00 to 0x64 (0 to 100%) | | | | | | | |
| Battery type | 0xE6 | This property indicates the battery type. | unsigned char | 1 byte | | Get | ○ | | |
| | | Type = 0x00 to 0xFF | | | | | | | |
| Charging amount setting 1 | 0xE7 | This property specifies the charging electric energy in Wh (DC). | unsigned long | 4 bytes | Wh | Set/Get | | | *4 |
| | | 0x00000000 to 0x3B9AC9FF<br>(0 to 999,999,999Wh) | | | | | | | |
| Discharging amount setting 1 | 0xE8 | This property specifies the discharging electric energy in Wh (DC). | unsigned long | 4 bytes | Wh | Set/Get | | | *5 |
| | | 0x00000000 to 0x3B9AC9FF<br>(0 to 999,999,999Wh) | | | | | | | |
| Charging amount setting 2 | 0xE9 | This property specifies the charging capacity in units of 0.1Ah (DC). | unsigned short | 2 bytes | 0.1Ah | Set/Get | | | *4 |
| | | 0x0000 to 0x7FFE (0 to 3,276.6Ah) | | | | | | | |
| Discharging amount setting 2 | 0xEA | This property specifies the discharging capacity in units of 0.1Ah (DC). | unsigned short | 2 bytes | 0.1Ah | Set/Get | | | *5 |



© 2000 - 2023 ECHONET Consortium

| | | | | | | | | | |
|---|---|---|---|---|---|---|---|---|---|
| | | 0x0000 to 0x7FFE (0 to 3,276.6Ah) | | | | | | | |
| Charging electric power setting | 0xEB | This property specifies the charging electric power in watts (AC).<br>0x00000000 to 0x3B9AC9FF<br>(0 to 999,999,999Wh) | unsigned long | 4 bytes | W | Set/Get | | | |
| Discharging electric power setting | 0xEC | This property specifies the discharging electric power in watts (AC).<br>0x00000000 to 0x3B9AC9FF (0 to 999,999,999Wh) | unsigned long | 4 bytes | W | Set/Get | | | |
| Charging current setting | 0xED | This property specifies the charging current in units of 0.1A (AC).<br>0x0000 to 0xFFFD (0 to 6,553.3A) | unsigned short | 2 bytes | 0.1A | Set/Get | | | |
| Discharging current setting | 0xEE | This property specifies the discharging current in units of 0.1A (AC).<br>0x0000 to 0xFFFD (0 to 6,553.3A) | unsigned short | 2 bytes | 0.1A | Set/Get | | | |
| Rated voltage (Independent) | 0xEF | This property indicates the rated voltage of a battery in the independent status in volts (AC).<br>0x0000 to 0x7FFE (0 to 32,766V) | unsigned short | 2 bytes | V | Get | | | |

Note: In the "Announcement at status change" column, ○ denotes mandatory processing when the property is implemented.

*1: The definition of effective capacity is effective capacity as of the present point in time. Calculation of effective capacity has not been standardized as of the point in time of creation of these specifications due to differences in calculation specifications for each device. It is recommended that users of this property obtain information separately for each device.

*2: It is mandatory to install Remaining stored electricity 1, Remaining stored electricity 2, or Remaining stored electricity 3.

*3: When Charging/discharging amount setting 1 (or 2) is used, Charging/discharging amount setting 2 (or 1), Charging amount setting 1, Discharging amount setting 1, Charging amount setting 2 and Discharging amount setting 2 shall not be used.

*4: When Charging amount setting 1 (or 2) is used, Charging amount setting 2 (or 1) and Charging/discharging amount setting 1 and 2 shall not be used.

*5: When Discharging amount setting 1 (or 2) is used, Discharging amount setting 2 (or 1) and Charging/discharging amount setting 1 and 2 shall not be used.

*6: Among the property contents, incorporation of the operation modes of Charging, Discharging and Standby are required.

In this class, electric current, voltage, and energy values shall be those of AC. The figure below shows an example configuration.



© 2000 - 2023 ECHONET Consortium

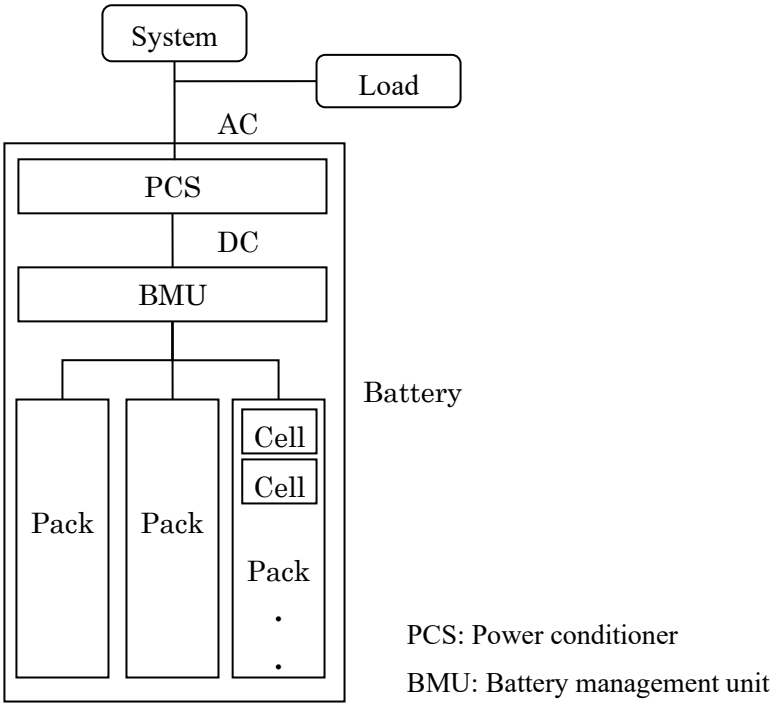


A relational image of various properties related to electric energy that are handled in this class is shown below. The actual chargeable/dischargeable amounts, upper limit for dischargeable amount, and lower limit for dischargeable amount (areas used) are based on specifications for the storage battery.

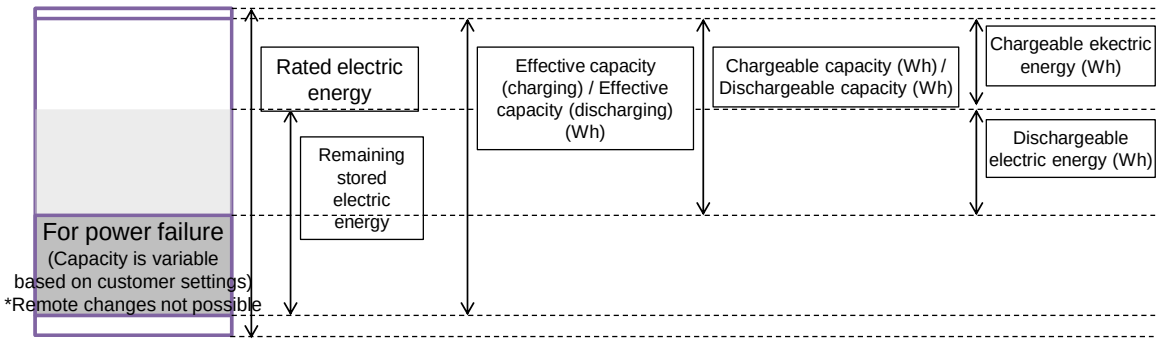


To be exact, there are cases where the values for chargeable capacity and dischargeable capacity differ. There are also cases where effective capacity differs for charging and discharging.

(1) Operation status (a property inherited from the device object super class)

This property indicates whether the functions specific to this class are operating (ON) or not (OFF). In the case of a node in which this class is implemented and the functions specific to this class start operating upon startup of the node, this property may be implemented with the value fixed at 0x30 (operation status ON).



© 2000 - 2023 ECHONET Consortium

(2) Identification number (a property inherited from the device object super class)

Definitions in ECHONET and ECHONET Lite are as follows. This property is required for the storage battery class.

- ECHONET definition

  This property indicates a number that allows each node to be uniquely identified in the domain. The property indicates a lower-layer communication software ID field which stores IDs defined for each lower-layer communication software class and a unique number field that stores a unique identification number that is assigned to each product using a specified method for each lower-layer communication software program. The definition of this unique number is given in the specifications for lower-layer communication software programs in Part III. (However, Version3.00 and later versions of the ECHONET Specifications define this unique number for IP/Bluetooth-dependent lower-layer communication software and IP/Ethernet/IEEE802.3dependent lower-layer communication software.)

  This unique number indicates the hardware address. If the hardware address is less than 8bytes, it shall be stored in the unique number field from the highest-order byte and the remaining bytes shall be padded with 0.

  Each ECHONET node must have at least one device object, but the node identification number property value must be the same as the value of the node identification number property held by the device object.

- ECHONET Lite definition

  This property indicates a number that allows each device object to be uniquely identified in the domain. As ECHONET Lite does not define lower-layer communication protocol classes, it only considers 0xFE, 0xFF, and 0x00 as protocol classes of lower-layer communication.

  Manufacturer's specific code (0xFE) consists of a manufacturer code field to store the code of each manufacturer and a field defined by each manufacturer. The first to third bytes indicate a 3-byte manufacturer code specified by the ECHONET Consortium. Byte 4 and later stores the unique ID of each vendor. Each vendor shall ensure that the codes will not overlap.

| Manufacturer code (3 bytes) | Unique ID field (unique identification number specified by the manufacturer) (13 bytes) |
|---|---|

(3) Fault description

The "Fault description" property shall be assigned fault description code values as specified in device object super class Table 2-3.



© 2000 - 2023 ECHONET Consortium

A “recoverable fault” as defined in the table is an abnormality that hinders the normal functioning of the device, but the cause of the fault can be removed by some action by the user, or the cause of the fault can be removed no action.

A “fault that requires repair” as defined in the table is a fault which is currently inhibiting the proper operation of the device or a function of the device and whose cause cannot be removed without repair work by a specialist.

The "Recover operation no required" may be caused by the power grid or by the environment such as temperature.

The "Repair location unknown" is a repair location cannot be specified.

Also, in some cases, such as a fault caused by a disturbance does not require repair.

The values between 0x03EA and 0x03FE, which are values for combinations of higher- and lower-order bytes of the fault description code, are reserved for future use.

When multiple faults occur at the same time, values are set in order of priority: "Faults that require repair", "A fault has occurred, but the recovery method or fault location cannot be determined", "Recoverable faults".

If the “Fault status” property (0x88) of the device object super class indicates that there is a fault (0x41), the lower-order byte of the "Fault Description Code" is 0x01 to 0xE9 or the "Fault Description Code" shall be 0x03FF. If the “Fault status” is no fault, the "Fault Description Code" shall be 0x0000.

(4) Product code

The “Product code” property identifies the relevant product of the manufacturer using a 12-byte ASCII code. “Product code” property values are not defined by the ECHONET Consortium; they are defined by each manufacturer. When the “Product code” property value is less than 12 bytes, the product code shall be left-justified in the data area and the remainder of the data area shall be padded with NULLs or spaces.

(5) Current time setting

This property indicates the current local time using a value between 0x00 and 0x17 (0 and 23) for the hour and a value between 0x00 and 0x3B (0 and 59) for the minute. The first byte of the property value indicates the hour and the second byte indicates the minute. Only Get is required for this class.

(6) Current date setting

This property indicates the current date using a value between 0x0001 and 0x270F (1 and 9999) for the year, a value between 0x01 and 0x0C (1 and 12) for the month and a value between 0x01 and 0x1F (1 and 31) for the day. The first and second bytes are treated as one piece of unsigned short data which indicates the year (2 bytes). The third byte indicates the month (1 byte) and the fourth byte



© 2000 - 2023 ECHONET Consortium

indicates the day (1 byte). Only Get is required for this class.

(7) AC effective capacity (charging)

This property expresses the electric energy that can be charged to an empty storage battery in units of Wh. The effective capacity indicated in this property is the AC value. The property value range is 0x00000000 to 0x3B9AC9FF (0 to 999,999,999Wh). With regard to the relationship between the effective capacity defined in this property and other properties related to electric energy, such as rated electric energy, etc., refer to the diagram above. The effective capacity may change due to degradation over time. The method for calculating effective capacity of a storage battery and the timing at which to perform recalculations are not specified in these specifications.

(8) AC effective capacity (discharging)

This property expresses the dischargeable electric energy from a storage battery in a state where it is fully charged in units of Wh. The effective capacity indicated in this property is the AC value. The property value range is 0x00000000 to 0x3B9AC9FF (0 to 999,999,999Wh). With regard to the relationship between the effective capacity defined in this property and other properties related to electric energy, such as rated electric energy, etc., refer to the diagram above. The effective capacity may change due to degradation over time. The method for calculating effective capacity of a storage battery and the timing at which to perform recalculations are not specified in these specifications.

(9) AC chargeable capacity

This property indicates the capacity that can be used charging normally, which means the AC effective capacity (charging) excluding the energy always stored in preparation for power failure. The chargeable capacity indicated in this property is the AC value. With regard to the relationship between the chargeable capacity defined in this property and other properties related to electric energy, such as rated electric energy, etc., refer to the diagram above. The chargeable capacity may change due to degradation over time. The method for calculating chargeable capacity of a storage battery and the timing at which to perform recalculations are not specified in these specifications.

(10) AC dischargeable capacity

This property indicates the capacity that can be used for discharging normally, which means the AC effective capacity (discharging) excluding the energy always stored in preparation for power failure. The dischargeable capacity indicated in this property is the AC value. With regard to the relationship between the dischargeable capacity defined in this property and other properties related to electric energy, such as rated electric energy, etc., refer to the diagram above. The dischargeable capacity may change due to degradation over time. The method for calculating dischargeable capacity of a storage



© 2000 - 2023 ECHONET Consortium

battery and the timing at which to perform recalculations are not specified in these specifications.

(11) AC chargeable electric energy

This property indicates the electric energy that is actually chargeable. The chargeable electric energy indicated in this property is the AC value. With regard to the relationship between the chargeable electric energy defined in this property and other properties related to electric energy, such as rated energy, etc., refer to the diagram above.

(12) AC dischargeable electric energy

This property indicates the electric energy that is actually dischargeable. The dischargeable electric energy indicated in this property is the AC value. With regard to the relationship between the dischargeable electric energy defined in this property and other properties related to electric energy, such as rated energy, etc. refer to the diagram above.

(13) AC charge upper limit setting

This property sets the upper limit for the charge amount within the AC chargeable capacity. If the entire chargeable capacity is to be charged, the value for this property shall be set to 100.

(14) AC discharge lower limit setting

This property sets the lower limit for the discharge amount within the AC dischargeable capacity. If the entire dischargeable capacity is to be discharged, the value for this property shall be set to 0.

(15) AC cumulative charging electric energy

This property indicates the cumulative amount of electric energy when charging in units of 0.001kWh. The property value range is 0x00000000 to 0x3B9AC9FF (0 to 999,999.999kWh). When the cumulative amount of electric energy overflows, the property value shall be incremented again from 0x00000000. The cumulative amount of charging electric energy indicated in this property is the AC value.

(16) AC cumulative discharging electric energy

This property indicates the cumulative amount of electric energy when discharging in units of 0.001kWh. The property value range is 0x00000000 to 0x3B9AC9FF (0 to 999,999.999kWh). When the cumulative amount of electric energy overflows, the property value shall be incremented again from 0x00000000. The cumulative amount of discharging electric energy indicated in this property is the AC value.



© 2000 - 2023 ECHONET Consortium

(17) AC charge amount target value

This property designates the amount of electric energy charged in units of Wh (this property does not designate the residual quantity of a storage battery after charging). When the operation mode is set to Charging, this target value is reflected in discharging operation without having to set the operation mode again; when the operation mode is set to something other than Charging, this target value is reflected in Charging operation when the operation mode is set to Charging. The property value range when the charging amount is set is 0x00000001 to 0x3B9AC9FF (1 to 999,999,999Wh). The property value is 0x00000000 when there is no value set, and the charge amount during charging is determined by the storage battery itself. During charging operation based on this target value, there is no change in the value based on the charging energy (there is no successive change corresponding to actual performance of charging energy). Since there are cases where status change announcements are not made if the same value is set, it is recommended that the same value not be set for this target value. When charging operation based on this target value is completed, the operating status of the storage battery becomes “Standby”, and this target value becomes 0. However, the value of the operation mode setting does not change. There are also cases where charging ends without the electric energy set for this target value being charged. If charging until the AC chargeable amount becomes 0, specify a value greater than the AC chargeable capacity for this target value. The charging amount indicated in this property is the AC value.

(18) AC discharge amount target value

This property designates the amount of electric energy discharged in units of Wh (this property does not designate the residual quantity of a storage battery after discharging). When the operation mode is set to Discharging, this target value is reflected in discharging operation without having to set the operation mode again; when the operation mode is set to something other than Discharging, this target value is reflected in discharging operation when the operation mode is set to Discharging. The property value range when the discharging amount is set is 0x00000001 to 0x3B9AC9FF (1 to 999,999,999Wh). The property value is 0x00000000 when there is no value set, and the discharge amount during discharging is determined by the storage battery itself. During discharging operation based on this target value, there is no change in the value based on the discharging energy (there is no successive change corresponding to actual performance of discharging energy). Since there are cases where status change announcements are not made if the same value is set, it is recommended that the same value not be set for this target value. When discharging operation based on this target value is completed, the operating status of the storage battery becomes “Standby”, and this target value becomes 0. However, the value of the operation mode setting does not change. There are also cases where discharging ends without the electric energy set for this target value being discharged. If discharging until the AC dischargeable amount becomes 0, specify a value greater than the AC dischargeable capacity for this target value. The discharging amount indicated



© 2000 - 2023 ECHONET Consortium

in this property is the AC value.

(19) Charging method

This property indicates the charging method when setting charging (0x42) to the operation mode setting (EPC = 0xDA). Charging methods include: charging (0x01) with maximum electric charging power (EPC = 0xC8), charging (0x02) with surplus electric power of solar power generation, charging (0x03) with designated electric power indicated by charging electric power setting (EPC = 0xEB), charging (0x04) with designated electric current indicated by charging electric current setting (EPC = 0xED), and others (0x00). “Others” mean the charging methods that do not fall into any of these charging methods. Note that there are some storage batteries for which this property value changes to designated electric power charging (0x03) by setting the charging electric power setting (EPC = 0xEB), or this property value changes to designated electric current charging (0x04) by setting charging electric current setting (EPC = 0xED).



© 2000 - 2023 ECHONET Consortium

An overview of charging methods handled by the storage battery class is shown below.

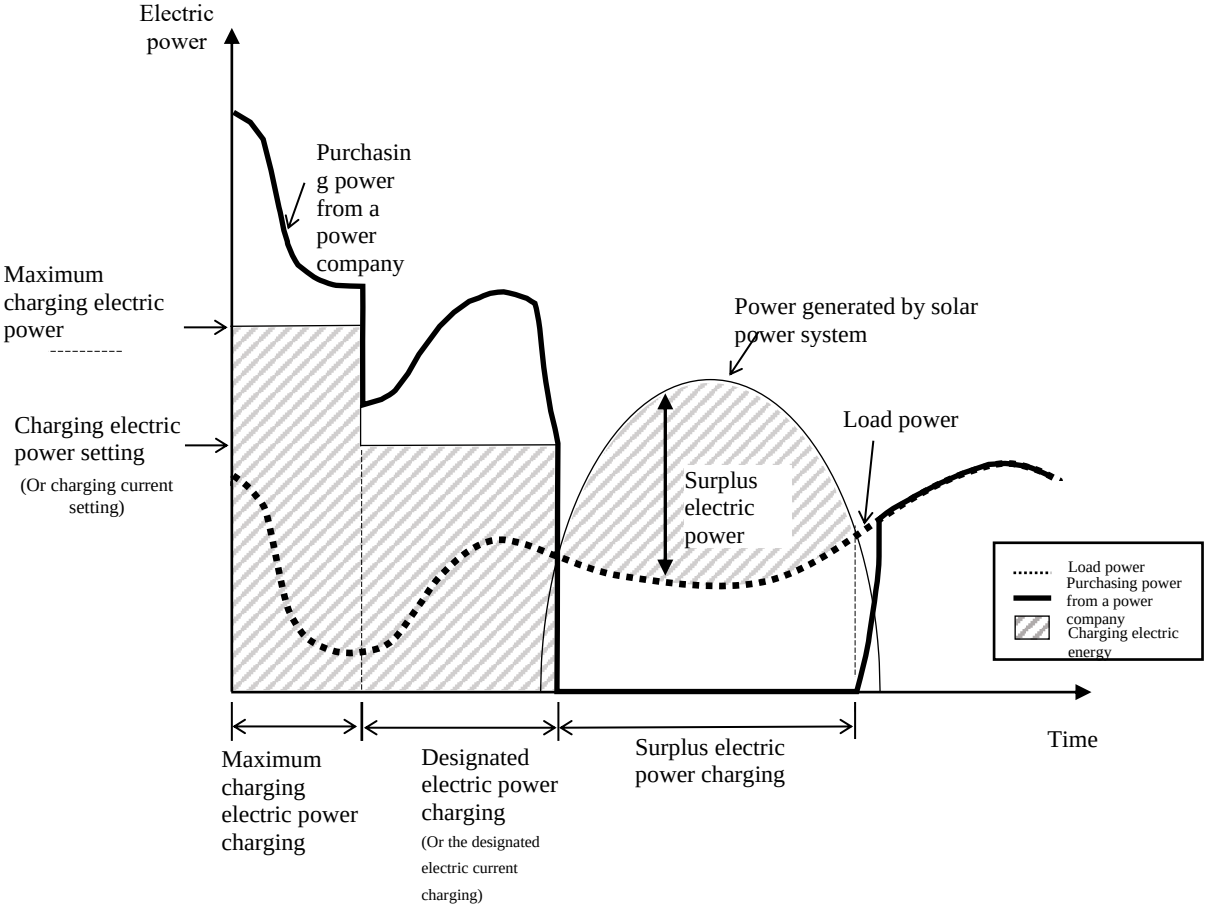


(20) Discharging method

This property indicates discharging method when setting discharging (0x43) to operation mode setting (EPC = 0xDA). Discharging methods include: discharging (0x01) with maximum discharging electric power (EPC = 0xC9), discharging (0x02) following to household load power, discharging (0x03) with designated electric power indicated by discharging electric power setting (EPC = 0xEC), discharging (0x04) with designated electric current indicated by discharging electric current setting (EPC = 0xEE), and others (0x00). “Others” mean the discharging methods that do not fall into any of these discharging methods. If the storage batteries are not allowed for reverse power flow and when the maximum discharging electric power or designated discharging electric power setting exceeds the household load, the batteries perform load-following discharging but the property value remains same.

Note that there are some storage batteries for which this property value changes to designated electric power discharging (0x03) by setting discharging electric power setting (EPC = 0xEC), or this property value changes to designated electric current discharging (0x04) by setting discharging current setting (EPC = 0xEE).



© 2000 - 2023 ECHONET Consortium

An overview of discharging methods handled by the storage battery class are shown below.

The first figure shows an overview of discharging methods for storage batteries that are not allowed reverse power flow.

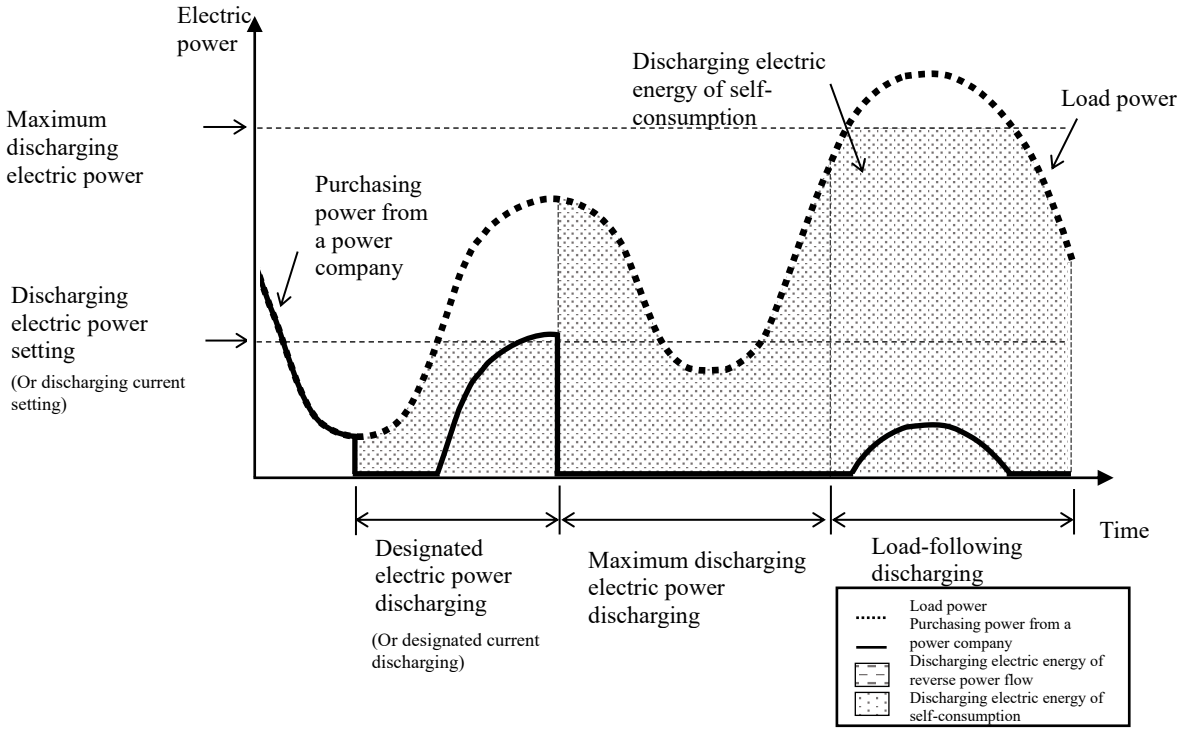




© 2000 - 2023 ECHONET Consortium

The second figure shows an overview of discharging methods for storage batteries that are allowed reverse power flow.

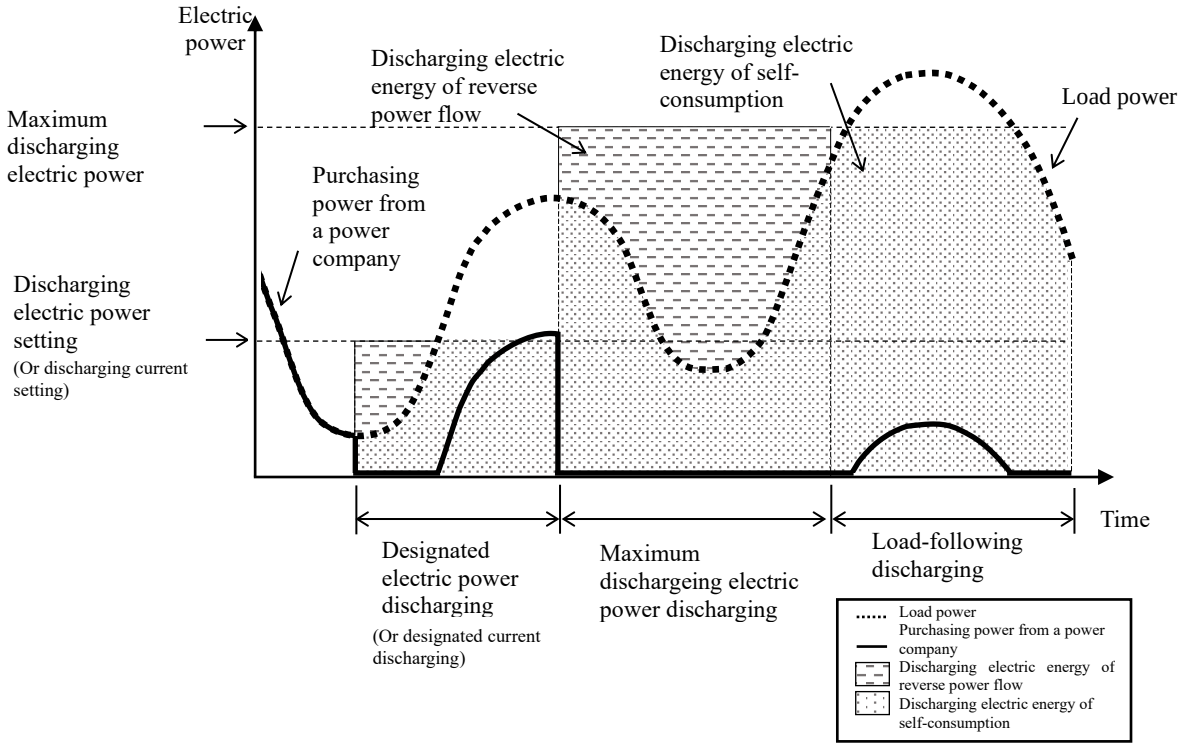


(21) Minimum/maximum charging electric power

This property indicates the minimum/maximum electric power for charging in watts when the system interconnection status is system-interconnected (reverse power flow acceptable) or system-interconnected (reverse power flow not acceptable). The property value range is 0x00000000 to 0x3B9AC9FF (0 to 999,999,999W) and the property value shall be derived from the high-order bytes in order of minimum and maximum. When the property value of the actual device is higher than the upper limit of the value range, 0xFFFFFFFF (overflow code) shall be used. If the charging function is not supported, the value shall be 0. When the “Minimum/maximum charging electric power (independent)” property (EPC = 0xDC) is not used, the value of this property may also be used as the value in the independent status.

(22) Minimum/maximum discharging electric power

This property indicates the minimum/maximum electric power for discharging in watts when the system interconnection status is system-interconnected (reverse power flow acceptable) or system-interconnected (reverse power flow not acceptable). The value range of the property shall be from 0x00000000 to 0x3B9AC9FF (0 to 999,999,999W) and the property value shall be derived from the high-order bytes in order of minimum and maximum. When the property value of the actual device is higher than the upper limit of the value range, 0xFFFFFFFF (overflow code) shall be used. If the discharging function is not supported, the value shall be 0. When the “Minimum/maximum



© 2000 - 2023 ECHONET Consortium

discharging electric power (independent)" property (EPC = 0xDD) is not used, the value of this property may also be used as the value in the independent status.

(23) Minimum/maximum charging current

This property indicates the minimum/maximum current for charging in units of 0.1A when the system interconnection status is system-interconnected (reverse power flow acceptable) or system-interconnected (reverse power flow not acceptable). The property value range is 0x0000 to 0x7FFE (0 to 3,276.6A) and the property value shall be derived from the high-order bytes in order of minimum and maximum. When the property value of the actual device is higher than the upper limit of the value range, 0xFFFF (overflow code) shall be used. If the charging function is not supported, the value shall be 0. When the "Minimum/maximum charging current (independent)" property (EPC = 0xDE) is not used, the value of this property may also be used as the value in the independent status.

(24) Minimum/maximum discharging current

This property indicates the minimum/maximum current for discharging in units of 0.1A when the system interconnecion status is system-interconnected (reverse power flow acceptable) or system-interconnected (reverse power flow not acceptable). The property value range is from 0x0000 to 0x7FFE (0 to 3,276.6A) and the property value shall be derived from the high-order bytes in order of minimum and maximum. When the property value of the actual device is higher than the upper limit of the value range, 0xFFFF (overflow code) shall be used. If the discharging function is not supported, the value shall be 0. When the "Minimum/maximum discharging current (independent)" property (EPC = 0xDF) is not used, the value of this property may also be used as the value in the independent status.

(25) Re-interconnection permission setting

After system splitting of a storage battery due to power failure, there are cases where prior consultation with the power company is necessary regarding system interconnection (re-interconnection) after restoration of power. If system interconnection after restoration of power is not possible automatically, set the value for this property to (0x42) at the point in time when a splitting system occurs in the storage battery due to power failure, etc., and wait to receive a write request for re-interconnection permission (0x41) after restoration of power.

(26) Operation permission setting

In a case where a condition such that the storage battery must not be operated arises due to some kind of requirement (contract, connection to a system, etc.), this property makes the storage battery function disabled (Prohibited = 0x42). In cases where the condition is such that operation as a storage battery is acceptable, set the value for this property to 0x41 (Permitted).



© 2000 - 2023 ECHONET Consortium

(27) Independent operation permission setting

This property sets permission (0x41) or prohibition (0x42) for independent operation of the storage battery when there is power failure due to disaster, etc.

(28) Working operation status

This property indicates the storage battery working operation status as Rapid charging (0x41), Charging (0x42), Discharging (0x43), Standby (0x44), Test (0x45), Automatic (0x46), Restart (0x48), Effective capacity recalculation processing (0x49), or Other (0x40). The Charging, Discharging, and Standby operation status are mandatory.

(29) AC rated electric energy

This property indicates the rated electric energy in Wh. The property value range is 0x00000000 to 0x3B9AC9FF (0 to 999,999,999Wh). The rated electric energy indicated in this property is the AC value.

(30) Rated electric energy

This property indicates the rated electric energy (catalog value) in Wh. The property value range is 0x00000000 to 0x3B9AC9FF (0 to 999,999,999Wh). The rated electric energy indicated in this property is the DC value.

(31) Rated capacity

This property indicates the rated capacity (catalog value) in increments of 0.1Ah. The property value range is 0x0000 to 0x7FFE (0 to 3,276.6Ah). Note that the capacity usable as a system can be smaller than the rated capacity, depending on the life of the battery, the provision of emergency backup, and other factors.

(32) Rated voltage

This property indicates the rated voltage (catalog value) in volts when the system interconnection status is system interconnected (reverse power flow acceptable) or system interconnected (reverse power flow not acceptable). The property value range is 0x0000 to 0x7FFE (0 to 32,766V). When the “Rated voltage (independent)” property (EPC = 0xEF) is not used, the value of this property may also be used as the value in the independent status.

(33) Measured instantaneous charging/discharging electric power

This property indicates the measured instantaneous charging/discharging electric power in watts. The property value range is 0x00000001 to 0x3B9AC9FF (1 to 999,999,999W) for charging and 0xFFFFFFFF to 0xC4653601 (-1 to -999,999,999W) for discharging. When the property value of the



© 2000 - 2023 ECHONET Consortium

actual device is higher than the upper limit of the value range, 0x7FFFFFFF (overflow code) shall be used. When the property value of the actual device is lower than the lower limit of the value range, 0x80000000 (underflow code) shall be used. When neither charging nor discharging is being performed, the property value shall be 0.

(34) Measured instantaneous charging/discharging current

This property indicates the measured instantaneous charging/discharging current in units of 0.1A. The property value range is 0x0001 to 0x7FFE (0.1 to 3,276.6A) for charging and 0xFFFF to 0x8001 (-0.1 to -3,276.7A) for discharging. When the property value of the actual device is higher than the upper limit of the value range, 0x7FFF (overflow code) shall be used. When the property value of the actual device is lower than the lower limit of the value range, 0x8000 (underflow code) shall be used. When neither charging nor discharging is being performed, the property value shall be 0.

(35) Measured instantaneous charging/discharging voltage

This property indicates the measured instantaneous charging/discharging voltage in volts. The property value range is 0x0001 to 0x7FFE (1 to 32,766V) for charging and 0xFFFF to 0x8001 (-1 to -32,767V) for discharging. When the property value of the actual device is higher than the upper limit of the value range, 0x7FFF (overflow code) shall be used. When the property value of the actual device is lower than the lower limit of the value range, 0x8000 (underflow code) shall be used. When neither charging nor discharging is being performed, the property value shall be 0.

(36) Measured cumulative discharging electric energy

This property indicates the measured cumulative discharging electric energy in units of 0.001kWh. The property value range is 0x00000000 to 0x3B9AC9FF (0 to 999,999.999kWh). In the event of a cumulative discharging electric energy overflow, the counting of the cumulative discharging electric energy shall be restarted from 0x00000000. The DC value is recommended for the measured cumulative discharging electric energy value indicated in this property. Note that there are products which implement this property in AC values.

(37) Measured cumulative discharging electric energy resetting

This property resets “Measured cumulative discharging electric energy” to zero by setting 0x00.

(38) Measured cumulative charging electric energy

This property indicates the measured cumulative charging electric energy in units of 0.001kWh. The property value range is 0x00000000 to 0x3B9AC9FF (0 to 999,999.999kWh). In the event of a cumulative charging electric energy overflow, the counting of the cumulative charging electric energy shall be restarted from 0x00000000. The DC value is recommended for the measured cumulative charging electric energy value indicated in this property. Note that there are products which implement this property in AC values.



© 2000 - 2023 ECHONET Consortium

(39) Measured cumulative charging electric energy resetting

This property resets “Measured cumulative charging electric energy” to zero by setting 0x00.

(40) Operation mode setting

This property indicates the operation mode. The property value shall be 0x41 (Rapid charging), 0x42 (Charging), 0x43 (Discharging), 0x44 (Standby), 0x45 (Test), 0x46 (Automatic), 0x48 (Restart), Effective capacity recalculation processing (0x49), or 0x40 (Others). “Automatic” is the mode where the storage battery is assumed to operate autonomously. The various operating modes (charging, discharging, and standby) are mandatory. Depending on the system status, it may not always be possible to operate according to the operating mode setting. The actual status of storage battery charging or discharging, etc., is indicated by the working operation status. Even when operation according to the operating mode setting is not possible, it is recommended that the operating mode setting be kept.

(41) System interconnection status

This property indicates the status of interconnection with the system.

This property indicates either one of the System interconnected (reverse power flow acceptable) = 0x00, Independent type = 0x01, System interconnected (reverse power flow not acceptable) = 0x02.

Note that “reverse power flow acceptable” shall mean that a storage battery is set to allow reverse power flow, while “reverse power flow not acceptable” shall mean that a storage battery is set to not allow reverse power flow.

(42) Minimum/maximum charging electric power (Independent)

This property indicates the minimum and maximum values of charging electric power in watts when the system interconnection status is independent. The range of each value is 0x00000000 to 0x3B9AC9FF (0 to 999,999,999W). From the higher-order bytes, the property value shall be in order of minimum and maximum values. When the property value of the actual device is higher than the value range of this property, the overflow code 0xFFFFFFFF shall be used. If no charging function is supported, the value shall be 0. When this property is not used, the “Minimum/maximum charging electric power” property (EPC = 0xC8) may be used.

(43) Minimum/maximum discharging electric power (Independent)

This property indicates the minimum and maximum values of charging electric power in watts when the system interconnection status is independent. The range of each value is 0x00000000 to 0x3B9AC9FF (0 to 999,999,999W). From the higher-order bytes, the property value shall be in order of minimum and maximum values. When the property value of the actual device is higher than the value range of this property, the overflow code 0xFFFFFFFF shall be used. If no discharging function is supported, the value shall be 0. When this property is not used, the “Minimum/maximum



© 2000 - 2023 ECHONET Consortium

discharging electric power" property (EPC = 0xC9) may be used.

(44) Minimum/maximum charging current (Independent)

This property indicates the minimum and maximum values of charging current in units of 0.1A when the system interconnection status is independent. The range of each value is 0x0000 to 0x7FFE (0 to 3,276.6A). From the higher-order bytes, the property value shall be in order of minimum and maximum values. When the property value of the actual device is higher than the value range of this property, the overflow code 0xFFFF shall be used. If no charging function is supported, the value shall be 0. When this property is not used, the "Minimum/maximum charging current" property (EPC = 0xCA) may be used.

(45) Minimum/maximum discharging current (Independent)

This property indicates the minimum and maximum values of discharging current in units of 0.1A when the system interconnection status is independent. The range of each value is 0x0000 to 0x7FFE (0 to 3,276.6A). From the higher-order bytes, the property value shall be in order of minimum and maximum values. When the property value of the actual device is higher than the value range of this property, the overflow code 0xFFFF shall be used. If no discharging function is supported, the value shall be 0. When this property is not used, the "Minimum/maximum discharging current" property (EPC = 0xCB) may be used.

(46) Charging/discharging amount setting 1

Specifies the charging/discharging electric energy in Wh (positive/negative). (Note that this property does not specify the battery level after charging or discharging.) The property value range is 0x00000001 to 0x3B9AC9FF (1 to 999,999,999Wh) for charging and 0xFFFFFFFF to 0xC4653601 (-1 to -999,999,999Wh) for discharging. The charging/discharging status will not affect the value. When charging/discharging is completed, the operation status changes to Standby (however, cases where the operation mode setting changes to "Standby" are also permitted). For complete charging, this value shall be set equal to or greater than the rated electric energy. For complete discharging, this value shall be set equal to or greater than the rated electric energy with the negative sign. The Charging/discharging amount setting 1 indicated in this property is the DC value.

(47) Charging/discharging amount setting 2

Specifies the charging/discharging capacity in units of 0.1Ah (positive/negative). (Note that this property does not specify the battery level after charging or discharging.) The property value range is 0x0001 to 0x7FFE (0.1 to 3,276.6Ah) for charging and 0xFFFF to 0x8001 (-0.1 to -3,276.7Ah) for discharging. The charging/discharging status will not affect the value. When charging/discharging is completed, the operation mode changes to Standby (however, cases where the operation mode setting changes to "Standby" are also permitted). For complete charging, this value shall be set equal



© 2000 - 2023 ECHONET Consortium

to or greater than the rated electric energy. For complete discharging, this value shall be set equal to or greater than the rated electric energy with the negative sign.

(48) Remaining stored electricity 1

This property indicates the remaining stored electric energy during discharging at the rated discharging current in Wh. The property value range is 0x00000000 to 0x3B9AC9FF (0 to 999,999,999Wh). When the remaining stored electricity in Wh is calculated from the values of other remaining stored electricity properties, if the value of this object is provided when indicating the Wh units of remaining stored electricity in terminals, etc., the provided value shall be indicated. This is to avoid situations such as a discrepancy compared to the Wh indicated for the main unit. The Remaining stored electricity 1 indicated in this property is the DC value.

(49) Remaining stored electricity 2

This property indicates the remaining capacity during discharging at the rated discharging current in units of 0.1Ah. The property value range is 0x0000 to 0x7FFE (0 to 3,276.6Ah). When the remaining stored electricity in Ah is calculated from the values of other remaining stored electricity properties, if the value of this object is provided when indicating the Ah units of remaining stored electricity in terminals, etc., the provided value shall be indicated. This is to avoid situations such as a discrepancy compared to the Ah indicated for the main unit.

(50) Remaining stored electricity 3

This property indicates the charging rate of the battery in % ((remaining stored electricity)/(full charging capacity) ×100). The property value range is 0x00 to 0x64 (0 to 100). When the remaining stored electricity in % is calculated from the values of other remaining stored electricity properties, if the value of this object is provided when indicating the % units of remaining stored electricity in terminals, etc., the provided value shall be indicated. This is to avoid situations such as a discrepancy compared to the % indicated for the main unit.

(51) Battery state of health

This property indicates the deterioration (soundness) status of the battery in %. The property value range is 0x00 to 0x64 (0 to 100).

For example: ((full charging capacity after deterioration)/(initial full charging capacity) ×100).

(52) Battery type

This property indicates the battery type. The property value shall be 0x00 (unknown), 0x01 (lead), 0x02 (nickel-metal hydride), 0x03 (nickel-cadmium), 0x04 (lithium ion), 0x05 (zinc) or 0x06 (rechargeable alkaline). The values from 0x07 to 0xFF are reserved for future use.

(53) Charging amount setting 1



© 2000 - 2023 ECHONET Consortium

This property specifies the charging electric energy in Wh. (Note that this property does not specify the battery level after charging.) The property value range is 0x00000000 to 0x3B9AC9FF (0 to 999,999,999Wh). The charging status will not affect the value. When charging is completed, the operation mode changes to Standby (however, cases where the operation mode setting changes to “Standby” are also permitted). For complete charging, this value shall be set equal to or greater than the rated electric energy. The Charging amount setting 1 indicated in this property is the DC value.

(54) Discharging amount setting 1

This property specifies the discharging electric energy in Wh. (Note that this property does not specify the battery level after discharging.) The property value range is 0x00000000 to 0x3B9AC9FF (0 to 999,999,999Wh). The discharging status will not affect the value. When discharging is completed, the operation status changes to Standby (however, cases where the operation mode setting changes to “Standby” are also permitted). For complete discharging, this value shall be set equal to or greater than the rated electric energy. The Discharging amount setting 1 indicated in this property is the DC value.

(55) Charging amount setting 2

This property specifies the charging capacity in units of 0.1Ah. (Note that this property does not specify the battery level after charging.) The property value range is 0x0000 to 0x7FFE (0 to 3,276.6Ah). The charging status will not affect the value. When charging is completed, the operation status changes to Standby (however, cases where the operation mode setting changes to “Standby” are also permitted). For complete charging, this value shall be set equal to or greater than the rated capacity.

(56) Discharging amount setting 2

This property specifies the discharging capacity in units of 0.1Ah. (Note that this property does not specify the battery level after discharging.) The property value range is 0x0000 to 0x7FFE (0 to 3,276.6Ah). The discharging status will not affect the value. When discharging is completed, the operation status changes to Standby (however, cases where the operation mode setting changes to “Standby” are also permitted). For complete discharging, this value shall be set equal to or greater than the rated capacity.

(57) Charging electric power setting

This property specifies the charging electric power in watts. The property value range is 0x00000000 to 0x3B9AC9FF (0 to 999,999,999W).

This property value shall be effective when the charging method (EPC = 0xC1) is “designated electric power charging (0x03)” (however, note that setting this property may automatically set the value of the charging method (EPC = 0xC1) to designated electric power charging (0x03)).

(58) Discharging electric power setting



© 2000 - 2023 ECHONET Consortium

This property specifies the discharging electric power in watts. The property value range is 0x00000000 to 0x3B9AC9FF (0 to 999,999,999W).

This property value shall be effective when discharging method (EPC = 0xC2) is “designated electric power discharging (0x03)” (however, note that setting this property may automatically set the value of discharging method (EPC = 0xC2) to designated electric power discharging (0x03).

(59) Charging current setting

This property specifies the charging current in units of 0.1A. The property value range is 0x0000 to 0xFFFD (0 to 6,553.3A).

This property value shall be valid when charging method (EPC = 0xC1) is “designated electric current charging (0x04)” (however, note that setting this property may automatically set the value of charging method (EPC = 0xC1) to designated electric current charging (0x04).

(60) Discharging current setting

This property specifies the discharging current in units of 0.1A. The property value range is 0x0000 to 0xFFFD (0 to 6,553.3A).

This property value shall be effective when discharging method (EPC = 0xC2) is “designated electric current discharging (0x04)” (however, note that setting this property may automatically set the value of discharging method (EPC = 0xC2) to designated electric current discharging (0x04).

(61) Rated voltage (Independent)

This property indicates the rated voltage (catalog value) in volts when the system interconnection status is independent. The property value range is 0x0000 to 0x7FFE (0 to 32,766V). When this property is not used, the “Rated voltage” property (EPC = 0xD2) may be used.



© 2000 - 2023 ECHONET Consortium

## 3．3．18 Requirements for electric vehicle charger/discharger class

Class group code : 0x02

Class code : 0x7E

Instance code : 0x01–0x7F (0x00: All-instance specification code)

| Property name | EPC | Contents of property<br>Value range (decimal notation) | Data type | Data size | Unit | Access rule | Mandatory | Announcement at status change | Remarks |
|---|---|---|---|---|---|---|---|---|---|
| Operation status | 0x80 | This property indicates the ON/OFF status.<br>ON = 0x30, OFF = 0x31 | unsigned char | 1 byte | — | Set<br>Get | <br>○ | ○ | |
| Fault description | 0x89 | Describes the fault.<br>Lower-order byte of the fault description code. Higher-order byte of the fault description code. See “(3) ‘Fault Description’ Property.” | unsigned short | 2 bytes | - | Get | ○ | | |
| Product code | 0x8C | Identifies the product using ASCII code.<br>(Defined by each manufacturer.) | unsigned char × 12 | 12 bytes | - | Get | ○ | | |
| Dischargeable capacity of vehicle mounted battery 1 | 0xC0 | This property indicates the dischargeable capacity of a vehicle battery connected to an electric vehicle charger/discharger in Wh.<br>0x00000000–0x3B9AC9FF (0–999,999,999Wh) | unsigned long | 4 bytes | Wh | Get | ○ | | Note 1 |
| Dischargeable capacity of vehicle mounted battery 2 | 0xC1 | This property indicates the dischargeable capacity of a vehicle battery connected to an electric vehicle charger/discharger in units of 0.1Ah.<br>0x0000–0x7FFE (0–3,276.6Ah) | unsigned short | 2 bytes | 0.1Ah | Get | | | |
| Remaining dischargeable capacity of vehicle mounted battery 1 | 0xC2 | This property indicates the remaining dischargeable capacity of a vehicle battery connected to an electric vehicle charger/discharger in Wh.<br>0x00000000–0x3B9AC9FF (0–999,999,999Wh) | unsigned long | 4 bytes | Wh | Get | ○ | | Note 2 |
| Remaining dischargeable capacity of vehicle mounted battery 2 | 0xC3 | This property indicates the remaining dischargeable capacity of a vehicle battery connected to an electric vehicle charger/discharger in units of 0.1Ah.<br>0x0000–0x7FFE (0–3,276.6Ah) | unsigned short | 2 bytes | 0.1Ah | Get | | | |
| Remaining dischargeable capacity of vehicle mounted battery 3 | 0xC4 | This property indicates the remaining dischargeable capacity of a vehicle battery connected to an electric vehicle charger/discharger in %.<br>0x00–0x64 (0–100%) | unsigned char | 1 byte | % | Get | ○ | | Note 2 |
| Rated charge capacity | 0xC5 | This property indicates the rated charge capacity of an electric vehicle charger/discharger in W.<br>0x00000000–0x3B9AC9FF (0–999,999,999W) | unsigned long | 4 bytes | W | Get | ○ | | |
| Rated discharge capacity | 0xC6 | This property indicates the rated discharge capacity of an electric vehicle charger/discharger in W.<br>0x00000000–0x3B9AC9FF (0–999,999,999W) | unsigned long | 4 bytes | W | Get | ○ | | |



© 2000 - 2023 ECHONET Consortium

| | | | | | | | | | |
|---|---|---|---|---|---|---|---|---|---|
| Vehicle connection and chargeable/dischargeable status | 0xC7 | This property indicates whether an electric vehicle charger/discharger can be charged or discharged.<br>Undetermined = 0xFF<br>Vehicle not connected = 0x30<br>Connected to vehicle, Not chargeable, Not dischargeable = 0x40<br>Connected to vehicle, Chargeable, Not dischargeable = 0x41<br>Connected to vehicle, Not chargeable, Dischargeable = 0x42<br>Connected to vehicle, Chargeable, Dischargeable = 0x43<br>Connected to vehicle, chargeable/dischargeable status unknown=0x44 | unsigned char | 1 byte | — | Get | ○ | ○ | |
| Minimum/maximum charging electric power | 0xC8 | This property indicates the minimum and maximum values of charging electric power to an electric vehicle charger/discharger in W.<br>0x00000000–0x3B9AC9FF (0–999,999,999W)<br>Minimum charging electric power: Maximum charging electric power | unsigned long × 2 | 8 bytes | W | Get | ○ | | |
| Minimum/maximum discharging electric power | 0xC9 | This property indicates the minimum and maximum values of discharging electric power from a vehicle charger/discharger in W.<br>0x00000000–0x3B9AC9FF (0–999,999,999W)<br>Minimum discharging electric power: Maximum discharging electric power | unsigned long × 2 | 8 bytes | W | Get | ○ | | |
| Minimum/maximum charging current | 0xCA | This property indicates the minimum and maximum values of charging electric current to an electric vehicle charger/discharger in units of 0.1A.<br>0x0000–0x7FFE (0–3,276.6A)<br>Minimum charging current: Maximum charging current | unsigned short × 2 | 4 bytes | 0.1A | Get | ○ | | |
| Minimum/maximum discharging current | 0xCB | This property indicates the minimum and maximum values of discharging electric current from an electric vehicle charger/discharger in units of 0.1A.<br>0x0000–0x7FFE (0–3,276.6A)<br>Minimum discharging current: Maximum discharging current | unsigned short × 2 | 4 bytes | 0.1A | Get | ○ | | |
| Charger/discharger type | 0xCC | This property indicates the type of electric vehicle charger/discharger<br>AC_CPLT = 0x11<br>AC_HLC (charging only) = 0x12<br>AC_HLC (Charging/Discharging possible) = 0x13<br>DC_type AA(charging only)=0x21<br>DC_type AA(Charging/Discharging possible)=0x22<br>DC_type AA(discharging only)=0x23<br>DC_type BB(charging only)=0x31<br>DC_type BB(Charging/Discharging possible)=0x32<br>DC_type BB(discharging only)=0x33<br>DC_type EE(charging only)=0x41<br>DC_type EE(Charging/Discharging possible)=0x42<br>DC_type EE(discharging only)=0x43<br>DC_type FF(charging only)=0x51<br>DC_type FF(Charging/Discharging possible)=0x52<br>DC_type FF(discharging only)=0x53 | unsigned char | 1 byte | — | Get | ○ | | Note 6 |
| Vehicle connection confirmation | 0xCD | Confirms the connection status between an electric vehicle charger/discharger and a vehicle | unsigned char | 1 byte | — | Set | ○ | | Note 7 |



© 2000 - 2023 ECHONET Consortium

| | | | | | | | | | |
|---|---|---|---|---|---|---|---|---|---|
| | | Connection confirmation = 0x10 | | | | | | | |
| Chargeable capacity of vehicle mounted battery | 0xCE | This property indicates the chargeable capacity of a vehicle battery connected to an electric vehicle charger/discharger in “Wh”.<br>0x00000000 to 0x3B9AC9FF (0 to 999,999,999 Wh) | unsigned long | 4 bytes | Wh | Get | ○ | | Note 8 |
| Remaining chargeable capacity of vehicle mounted battery | 0xCF | This property indicates the remaining chargeable capacity of a vehicle battery connected to an electric vehicle charger/discharger in “Wh”.<br>0x00000000 to 0x3B9AC9FF (0 to 999,999,999 Wh) | unsigned long | 4 bytes | Wh | Get | ○ | | Note 8 |
| Used capacity of vehicle mounted battery 1 | 0xD0 | This property indicates the capacity of a vehicle battery connected to an electric vehicle charger/discharger in Wh.<br>0x00000000–0x3B9AC9FF (0–999,999,999Wh) | unsigned long | 4 bytes | Wh | Get | ○ | | Note 3 |
| Used capacity of vehicle mounted battery 2 | 0xD1 | This property indicates the capacity of a vehicle battery connected to an electric vehicle charger/discharger in units of 0.1Ah.<br>0x0000–0x7FFE (0–3,276.6Ah) | unsigned short | 2 bytes | 0.1Ah | Get | | | |
| Rated voltage | 0xD2 | This property indicates the normal rated voltage of an electric vehicle charger/discharger in V.<br>0x0000–0x7FFE (0–32,766V) | unsigned short | 2 bytes | V | Get | | | |
| Measured instantaneous charging/discharging electric power | 0xD3 | This property indicates the measured instantaneous charging/discharging electric power in ±W.<br>0x00000001–0x3B9AC9FF (1–999,999,999W): charging (positive), 0xFFFFFFFF–0xC4653601 (-1–-999,999,999W): discharging (negative) | signed long | 4 bytes | W | Get | | | |
| Measured instantaneous charging/discharging current | 0xD4 | This property indicates the instantaneous charging/discharging current in units of ±0.1A.<br>0x0001–0x7FFE (0.1–3,276.6A): charging (positive), 0xFFFF–0x8001 (-0.1–- -3,276.7A): discharging (negative) | signed short | 2 bytes | 0.1A | Get | | | |
| Measured instantaneous charging/discharging voltage | 0xD5 | This property indicates the instantaneous charging/discharging voltage in ±V.<br>0x0001–0x7FFE (1–32,766V): charging (positive), 0xFFFF–0x8001 (-1–- -32,767V): discharging (negative) | signed short | 2 bytes | V | Get | | | |
| Measured cumulative amount of discharging electric energy | 0xD6 | This property indicates the cumulative amount of discharging electric energy in units of 0.001kWh.<br>0x00000000–0x3B9AC9FF (0–999,999.999kWh | unsigned long | 4 bytes | 0.001 kWh | Get | | | |
| Cumulative amount of discharging electric energy reset setting | 0xD7 | This property resets the cumulative amount of discharging electric energy.<br>Reset = 0x00 | unsigned char | 1 byte | — | Set | | | |
| Measured cumulative amount of charging electric energy | 0xD8 | This property indicates the cumulative amount of charging electric energy in units of 0.001kWh.<br>0x00000000–0x3B9AC9FF (0–999,999.999kWh) | unsigned long | 4 bytes | 0.001 kWh | Get | | | |
| Cumulative amount of charging electric energy reset setting | 0xD9 | This property resets the cumulative amount of charging electricity energy.<br>Reset = 0x00 | unsigned char | 1 byte | — | Set | | | |
| Operation mode | 0xDA | This property sets the operation mode. | unsigned | 1 | — | Set | ○ | ○ | |



© 2000 - 2023 ECHONET Consortium

| | | | | | | | | | |
|---|---|---|---|---|---|---|---|---|---|
| setting | | Charging = 0x42, Discharging = 0x43, Standby = 0x44, Charging/Discharging = 0x46, Idle = 0x47, Preparation = 0x48, Automatic=0x49, Other = 0x40 | char | byte | | /Get | | | |
| System interconnection status | 0xDB | This property indicates the system interconnection status of an electric vehicle charger/discharger.<br>System interconnected (reverse power flow acceptable) = 0x00<br>Independent = 0x01<br>System interconnected (reverse power flow not acceptable) = 0x02 | unsigned char | 1 byte | — | Get | | | |
| Charging method | 0xDC | This property indicates the charging method when the operation mode setting (EPC=0xDA) is set to charging (0x42), Standby (0x44), or Charging/Discharging (0x46). | unsigned char | 1 Byte | — | Set | | ○ | |
| | | Maximum charging electric power charging=0x01,<br>Surplus electric power charging=0x02,<br>Designated electric power charging=0x03,<br>Designated electric current charging=0x04,<br>Designated purchasing electric power charging=0x05, V2G=0x06,<br>Others=0x00 | | | | Get | ○ | | |
| Discharging method | 0xDD | This property indicates discharging method when the operation mode setting (EPC=0xDA) is set to discharging (0x43), Standby (0x44), or Charging/Discharging (0x46) | unsigned char | 1 Byte | — | Set | | ○ | |
| | | Maximum discharging electric power discharging=0x01,<br>Load-following discharging=0x02,<br>Designated electric power discharging=0x03,<br>Designated electric current discharging=0x04,<br>Designated purchasing electric power discharging=0x05, V2G=0x06,<br>Others=0x00 | | | | Get | ○ | | |
| Purchasing electric power setting | 0xDE | This property specifies the upper limit of the purchasing electric power in W.<br>This shall be effective when charging method is designated purchasing electric power charging (0x05), or discharging method is designated purchasing electric power discharging (0x05). | unsigned long | 4 Byte | W | Set/ Get | | | |
| | | 0x00000000 to 0x3B9AC9FF (0 to 999,999,999W) | | | | | | | |
| Re-interconnection permission setting | 0xDF | This property sets permission and prohibition for interconnection to system. | unsigned char | 1 Byte | — | Set/ Get | | | |
| | | Permitted = 0x41, Prohibited = 0x42 | | | | | | | |
| Charging/discharging electric power setting | 0xE0 | This property specifies charging or discharging electric power in "W" when the value of charging method property or discharging method property is/are V2G (0x06) | signed long | 4 Byte | W | Set/ Get | | | |
| | | 0x00000001 to 0x3B9AC9FF (1 to 999,999,999): during charging (positive value)<br>0xFFFFFFFF to 0xC4653601 (-1 to -999,999,999): during discharging (negative value) | | | | | | | |
| Working operation status | 0xE1 | This property indicates the operating status of an electric vehicle charger/discharger. If this property is implemented, the operating statuses of charging status, discharging status, and standby/idle status are required. | unsigned char | 1 Byte | | Get | | ○ | |



© 2000 - 2023 ECHONET Consortium

| | | | | | | | | | |
|---|---|---|---|---|---|---|---|---|---|
| | | Charging = 0x42, Discharging = 0x43, Standby = 0x44, Idle = 0x47, Preparation = 0x48, Automatic = 0x49,Other = 0x40 | | | | | | | |
| Remaining stored electric energy of vehicle mounted battery 1 | 0xE2 | This property indicates the remaining stored capacity of a vehicle battery connected to an electric vehicle charger/discharger in Wh.<br>0x00000000–0x3B9AC9FF (0–999,999,999Wh) | unsigned long | 4 bytes | Wh | Get | ○ | | Note 4 |
| Remaining stored electric energy of vehicle mounted battery 2 | 0xE3 | This property indicates the remaining stored capacity of a vehicle battery connected to an electric vehicle charger/discharger in units of 0.1Ah.<br>0x0000–0x7FFE (0–3,276.6Ah) | unsigned short | 2 bytes | 0.1Ah | Get | | | |
| Remaining stored electric energy of vehicle mounted battery 3 | 0xE4 | This property indicates the remaining stored capacity of the electric vehicle mounted battery connected to an electric vehicle charger/discharger in %.<br>0x00–0x64 (0–100%) | unsigned char | 1 byte | % | Get | ○ | | Note 4 |
| Maintenance status | 0xE5 | This indicates a need for some kind of maintenance.<br>Occurrence = 0x41,<br>No occurrence = 0x42 | unsigned char | 1 byte | — | Get | | ○ | |
| Vehicle ID | 0xE6 | This property indicates the vehicle ID information of an electric vehicle connected to an electric vehicle charger/discharger.<br>First byte (data size for vehicle ID information): 0x01 through 0x18 (1-24), 0x00 if no vehicle ID is available.<br>Second and succeeding bytes (vehicle ID information): data specified for each vehicle.<br>No second and succeeding bytes exist if no vehicle ID information is available. | unsigned char | MAX 25 bytes | — | Get | ○ | | |
| Charging amount setting 1 | 0xE7 | This property specifies the charging electric energy in Wh.<br>0x00000000–0x3B9AC9FF (0–999,999,999Wh) | unsigned long | 4 bytes | Wh | Set/ Get | | | Note 5 |
| Charging amount setting 2 | 0xE9 | This property specifies the charging capacity in units of 0.1Ah.<br>0x0000–0x7FFE (0–3,276.6Ah) | unsigned short | 2 bytes | 0.1Ah | Set/ Get | | | Note 5 |
| Discharging amount setting | 0xEA | This property specifies the discharging electric energy in Wh.<br>0x00000000 to 0x3B9AC9FF (0 to 999,999,999 Wh) | unsigned long | 4 bytes | Wh | Set/Get | | | |
| Charging electric power setting | 0xEB | This property specifies the charging electric power in W.<br>0x00000000–0x3B9AC9FF (0–999,999,999W) | unsigned long | 4 bytes | W | Set/ Get | | | |
| Discharging electric power setting | 0xEC | This property specifies the discharging electric power in W.<br>0x00000000–0x3B9AC9FF (0–999,999,999W) | unsigned long | 4 bytes | W | Set/ Get | | | |
| Charging current setting | 0xED | This property specifies the charging current in units of 0.1A.<br>0x0000–0xFFFD (0–6,553.3A) | unsigned short | 2 bytes | 0.1A | Set/ Get | | | |
| Discharging current setting | 0xEE | This property specifies the discharging current in units of 0.1A.<br>0x0000–0xFFFD (0–6,553.3A) | unsigned short | 2 bytes | 0.1A | Set/ Get | | | |
| Rated voltage (in independent status) | 0xEF | Indicates the rated voltage of an electric vehicle charger/discharger in V when system interconnection status is independent. | unsigned short | 2 bytes | V | Get | | | |



© 2000 - 2023 ECHONET Consortium

| | | | | | | | | | |
|---|---|---|---|---|---|---|---|---|---|
| | | 0x0000–0x7FFE (0–32,766V) | | | | | | | |

Note: In the "Announcement at status change" column, ○ denotes mandatory processing when the property is implemented.

Note 1: The installation of "Dischargeable capacity of vehicle mounted battery 1" is mandatory in case of output from an electric vehicle connected to an electric vehicle charger/discharger. Where no response can be returned, "Response impossible" is returned.

Note 2: The installation of "Remaining dischargeable capacity of vehicle mounted battery 1" or "Remaining dischargeable capacity of vehicle mounted battery 3" is mandatory in case of output from an electric vehicle connected to an electric vehicle charger/discharger. Where no response can be returned, "Response impossible" is returned.

Note 3: The installation of "Used capacity of vehicle mounted battery 1" is mandatory in case of output from an electric vehicle connected to an electric vehicle charger/discharger. Where no response can be returned, "Response impossible" is returned.

Note 4: The installation of "Remaining stored electricity of vehicle mounted battery 1" or "Remaining stored electricity of vehicle mounted battery 3" is mandatory in case of output from an electric vehicle connected to an electric vehicle charger/discharger. Where no response can be returned, "Response impossible" is returned.

Note 5: When "Charging amount setting 1 (or 2)" is used, "Charging amount setting 2 (or 1)" shall not be used.

Note 6: DC_type AA, DC_type BB, DC_type EE and DC_type FF chargers/dischargers shall be electric vehicle chargers/dischargers with connectors of the shape specified in Configuration AA, Configuration BB, Configuration EE and Configuration FF as defined in IEC 62196-3.

Note 7: Vehicle connection confirmation is only mandatory when the charger/discharger type is DC_type AA.

Note 8: The installation of "chargeable capacity of vehicle mounted battery" and "chargeable capacity of vehicle mounted battery" is mandatory in case of output from an electric vehicle connected to an electric vehicle charger/discharger.

Electric vehicle charger/discharger includes Electric Vehicle Power System (EVPS) connected to an electric vehicle. Since an electric vehicle connected to an electric vehicle charger/discharger can be changed, the property values of the electric vehicle charger/discharger vary in accordance with the electric vehicle connected to the electric vehicle charger/discharger. When the status (Connected to vehicle, Chargeable/Dischargeable) changes from "Not connected to vehicle" to "Connected to vehicle," the connected electric vehicle may be different. Therefore, it is preferable to acquire property values again for specifications that are determined by the electric vehicle and EVPS.

For example: Used capacity of vehicle mounted battery 1, Dischargeable capacity of vehicle mounted battery 1, Remaining dischargeable capacity of vehicle mounted battery 1, and Remaining dischargeable capacity of vehicle mounted battery 3



© 2000 - 2023 ECHONET Consortium

AC shall be assumed for currents, voltages, and electric energies handled in this class.

A relationship between the properties related to electric energy that are handled in this class is shown below. Actual capacities shall be determined based on information from the electric vehicle connected to a charger/discharger, considering the efficiency of the chargers/dischargers.

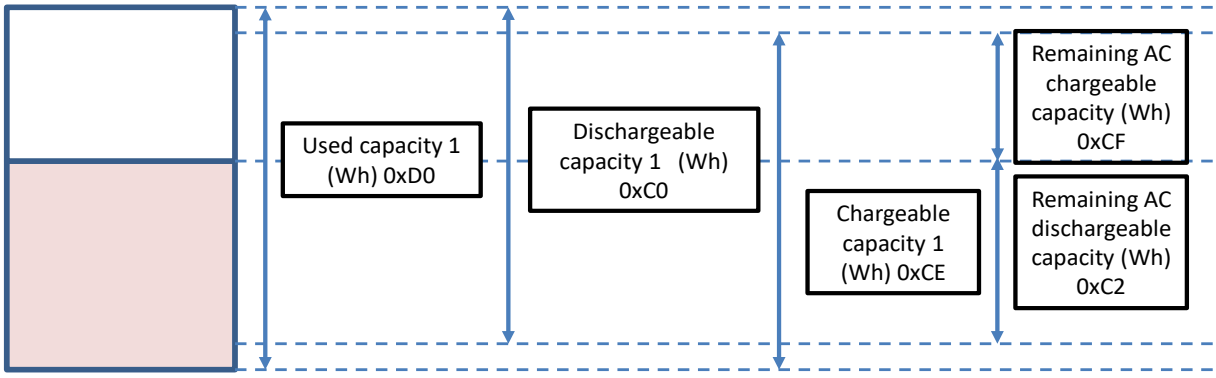


The following properties are output as information of electric vehicle chargers/dischargers, instead of information acquired from the electric vehicles.

- 0x80: Operation status
- 0xC5: Rated charge capacity
- 0xC6: Rated discharge capacity
- 0xC8: Minimum/maximum charging electric power
- 0xC9: Minimum/maximum discharging electric power
- 0xCA: Minimum/maximum charging current
- 0xCB: Minimum/maximum discharging current
- 0xCC: Charger/discharger type
- 0xD2: Rated voltage
- 0xD3: Measured instantaneous charging/discharging electric power
- 0xD4: Measured instantaneous charging/discharging current
- 0xD5: Measured instantaneous charging/discharging voltage
- 0xD6: Measured cumulative amount of discharging electric energy
- 0xD8: Measured cumulative amount of charging electric energy
- 0xDA: Operation mode setting
- 0xDB: System interconnection status
- 0xDC: Charging method
- 0xDD: Discharging method
- 0xE0: Charging/discharging electric power setting



© 2000 - 2023 ECHONET Consortium

- 0xEB Charging electric power setting
- 0xEC: Discharging electric power setting
- 0xED: Charging current setting
- 0xEE: Discharging current setting
- 0xEF: Rated voltage (Independent)

For properties based on the information acquired from electric vehicles connected to the electric vehicle chargers/dischargers, an example of the conversion calculation is shown in each property description. The examples are based on DC-type AA vehicles and assume the maximum charge/discharge efficiency of the chargers/dischargers as 1.

The terms to be used in following detailed descriptions shall be defined as follows.

- Total battery capacity: “used capacity of vehicle mounted battery 1” property
- Charging rate of the battery: “remaining stored electricity of vehicle mounted battery 3” property
- Constant number for charging rate indication: a fixed number to indicate charging rate (100% (0x64))
- Discharge lower limit for charging rate: the lower limit value that a vehicle can allow discharging.
- Charge upper limit for charging rate: the upper limit value that a vehicle can allow charging.
- Charger/discharger discharge efficiency: conversion efficiency between direct current and alternating current when discharged from the electric vehicle charger/discharger
- Charger/discharger charge efficiency: conversion efficiency between direct current and alternating current when charged from the electric vehicle charger/discharger

(1) Operation status (inherited from the property of the device object super class)

This property indicates whether an electric vehicle charger/discharger is ready to acquire status and accept settings (ON) or not (OFF). The property value is 0x30 for ON and 0x31 for OFF.

(2) Fault description

The “Fault description” property shall be assigned fault description code values as specified in device object super class Table 2-3.

A “recoverable fault” as defined in the table is an abnormality that hinders the normal functioning of the device, but the cause of the fault can be removed by some action by the user, or the cause of the fault can be removed no action.

A “fault that requires repair” as defined in the table is a fault which is currently inhibiting the proper operation of the device or a function of the device and whose cause cannot be removed without repair work by a specialist.

The "Recover operation no required" may be caused by the power grid or by the environment such as temperature.



© 2000 - 2023 ECHONET Consortium

The "Repair location unknown" is a repair location cannot be specified.

Also, in some cases, such as a fault caused by a disturbance does not require repair.

The values between 0x03EA and 0x03FE, which are values for combinations of higher- and lower-order bytes of the fault description code, are reserved for future use.

When multiple faults occur at the same time, values are set in order of priority: "Faults that require repair", "A fault has occurred, but the recovery method or fault location cannot be determined", "Recoverable faults".

If the “Fault status” property (0x88) of the device object super class indicates that there is a fault (0x41), the lower-order byte of the "Fault Description Code" is 0x01 to 0xE9 or the "Fault Description Code" shall be 0x03FF. If the “Fault status” is no fault, the "Fault Description Code" shall be 0x0000.

(3) Product code

The “Product code” property identifies the relevant product of the manufacturer using a 12-byte ASCII code. “Product code” property values are not defined by the ECHONET Consortium; they are defined by each manufacturer. When the “Product code” property value is less than 12 bytes, the product code shall be left-justified in the data area and the remainder of the data area shall be padded with NULLs or spaces.

(4) Dischargeable capacity of vehicle mounted battery 1

This property indicates the dischargeable capacity of a vehicle battery connected to an electric vehicle charger/discharger in Wh. The property value range is 0x00000000 to 0x3B9AC9FF (0 to 999,999,999Wh).

Based on information obtained from the vehicle, calculation can be implemented using following formula (example):

(Total battery capacity × (constant number for charging rate indication－discharge lower limit for charging rate) ÷100) × electric vehicle charger/discharger discharge efficiency

(5) Dischargeable capacity of vehicle mounted battery 2

This property indicates the dischargeable capacity of a vehicle battery connected to an electric vehicle charger/discharger in units of 0.1Ah. The property value range is 0x0000 to 0x7FFE (0 to 3,276.6Ah).

(6) Remaining dischargeable capacity of vehicle mounted battery 1

This property indicates the remaining dischargeable capacity of a vehicle battery connected to an electric vehicle charger/discharger in Wh. The property value range is 0x00000000 to 0x3B9AC9FF (0 to 999,999,999Wh).



© 2000 - 2023 ECHONET Consortium

Based on information obtained from the vehicle, calculation can be implemented using following formula (example):

(Total battery capacity × (charging rate of the battery - discharge lower limit for charging rate) ÷ 100) × charger/discharger discharge efficiency

(7) Remaining dischargeable capacity of vehicle mounted battery 2

This property indicates the remaining dischargeable capacity of a vehicle battery connected to an electric vehicle charger/discharger in units of 0.1Ah. The property value range is 0x0000 to 0x7FFE (0 to 3,276.6Ah).

(8) Remaining dischargeable capacity of vehicle mounted battery 3

This property indicates the remaining dischargeable capacity of a vehicle battery connected to an electric vehicle charger/discharger in %. The property value range is 0x00 to 0x64 (0 to 100%).

Based on information obtained from the vehicle, calculation can be implemented using following formula (example):

(Charging rate of the battery - discharge lower limit for charging rate) × charger/discharger discharge efficiency

(9) Rated charge capacity

This property indicates the rated charge capacity of an electric vehicle charger/discharger in W. The property value range is 0x00000000 to 0x3B9AC9FF (0 to 999,999,999W). When no charging function is supported, the value shall be 0 W.

(10) Rated discharge capacity

This property indicates the rated discharge capacity of an electric vehicle charger/discharger in W. The property value range is 0x00000000 to 0x3B9AC9FF (0 to 999,999,999W). When no discharging function is supported, the value shall be 0 W.

(11) Vehicle connection and chargeable/dischargeable status

This property indicates whether a vehicle is connected to an electric vehicle charger/discharger or not and whether it is chargeable or dischargeable. The property value is 0x30 when no vehicle is connected, 0x40 when a vehicle is connected but not chargeable and not dischargeable, 0x41 when the vehicle is chargeable but not dischargeable, 0x42 when the vehicle is not chargeable but dischargeable, 0x43 when the vehicle is chargeable and dischargeable, and 0x44 when chargeable/dischargeable status is unknown.

“0x44” shall be used also, if the vehicle status is unknown until charging or discharging is started,



© 2000 - 2023 ECHONET Consortium

the chargeable/dischargeable status shall be output when a charging or discharging start instruction is given. If the connection status of a vehicle cannot be determined, this property indicates “0xFF” as an undetermined status.

Vehicle connection and chargeable/dischargeable status shall be determined according to the combination of following information.

・Vehicle connection/disconnection confirmation

Vehicles shall be considered “connected” when a charger/discharger connector is locked and/or a signal line between the charger/discharger and the vehicle is connected. Vehicles shall be considered “not connected” (0x30) when a charger/discharger connector is not locked and/or a signal line between the charger/discharger and the vehicle is not connected.

・Dischargeable/not dischargeable determination

Shall be determined based on vehicle connection status.

When a vehicle does not support a discharging, the vehicle shall not be dischargeable.

When a vehicle supports a discharging, and a charging rate is higher than the discharge lower limit for the charging rate, the vehicle shall be dischargeable.

When a vehicle supports a discharging, and a charging rate is lower or equal to the discharge lower limit for charging rate, the vehicle shall not be dischargeable.

When a vehicle supports a discharging, and the vehicle and the charger/discharger are in a dischargeable state, the vehicle shall be dischargeable. When the vehicle and the charger/discharger are in other state, the vehicle shall not be dischargeable.

・Chargeable/not chargeable determination

Shall be determined based on vehicle connection status.

When a charge upper limit for charging rate is not 0, and charging rate is lower than charge upper limit for charging rate, the vehicle shall be chargeable.

When a charge upper limit for charging rate is 0, the vehicle shall be chargeable.

When a vehicle supports a charging, and the vehicle and the charger/discharger are in a chargeable state, the vehicle shall be chargeable. When the vehicle and the charger/discharger are in other state, the vehicle shall not be dischargeable.

When a vehicle does not support charging, the vehicle shall not be chargeable.

(12) Minimum/maximum charging electric power

This property indicates the minimum and maximum charging electric powers to an electric vehicle charger/discharger in W. Each value range is 0x00000000 to 0x3B9AC9FF (0 to 999,999,999W). The property value represents minimum and maximum in order from the highest-order byte. When the property value of the actual device is higher than the upper limit of the value range, the overflow code 0xFFFFFFFF shall be used. When no charging function is supported, the value



© 2000 - 2023 ECHONET Consortium

shall be 0.

(13) Minimum/maximum discharging electric power

This property indicates the minimum and maximum discharging electric powers to an electric vehicle charger/discharger in W. Each value range is 0x00000000 to 0x3B9AC9FF (0 to 999,999,999W). The property value represents minimum and maximum in order from the highest-order byte. When the property value of the actual device is higher than the upper limit of the value range, the overflow code 0xFFFFFFFF shall be used. When no discharging function is supported, the value shall be 0.

(14) Minimum/maximum charging current

This property indicates the minimum and maximum charging currents of an electric vehicle charger/discharger in units of 0.1A. Each value range is 0x0000 to 0x7FFE (0 to 3,276.6A). The property value represents minimum and maximum in order from the highest-order byte. When the property value of the actual device is higher than the upper limit of the value range, the overflow code 0xFFFF shall be used. When no charging function is supported, the value shall be 0.

(15) Minimum/maximum discharging current

This property indicates the minimum and maximum discharging currents of an electric vehicle charger/discharger in units of 0.1A. Each value range is 0x0000 to 0x7FFE (0 to 3,276.6A). The property value represents minimum and maximum in order from the highest-order byte. When the property value of the actual device is higher than the upper limit of the value range, the overflow code 0xFFFF shall be used. When no discharging function is supported, the value shall be 0.

(16) Charger/discharger type

This property indicates the type of electric vehicle charger/discharger. As the type of electric vehicle charger/discharger, it indicates one of AC_CPLT (0x11), AC_HLC (charging only) (0x12), AC_HLC (charging/discharging) (0x13), DC_type AA (charging only) (0x21), DC_type AA (charging/discharging) (0x22), DC_type AA (discharging only) (0x23), DC_type BB (charging only) (0x31), DC_type BB (charging/discharging) (0x32), DC_type BB (discharging only) (0x33), DC_type EE (charging only) (0x41), DC_type EE (charging/discharging) (0x42), DC_type EE (discharging only) (0x43), DC_type FF (charging only) (0x51), DC_type FF (charging/discharging) (0x52), and DC_type FF (discharging only) (0x53).

Explanation of charger/discharger types

- AC_CPLT (0x11): Uses alternating current to charge the electric vehicle and CPLT signals to



© 2000 - 2023 ECHONET Consortium

communicate with the electric vehicle.

- AC_HLC (charging only) (0x12): Uses alternating current to charge the electric vehicle and both CPLT and HLC signals to communicate with the electric vehicle.
- AC_HLC (charging/discharging) (0x13): Uses alternating current to charge the electric vehicle and to discharge from the electric vehicle to the charger/discharger, and uses both CPLT and HLC signals to communicate with the electric vehicle.
- DC_type AA (charging only) (0x21): Uses direct current to charge the electric vehicle and type AA signals to communicate with the electric vehicle.
- DC_type AA (charging/discharging) (0x22): Uses direct current to charge the electric vehicle and to discharge from the electric vehicle to the charger/discharger, and uses type AA signals to communicate with the electric vehicle.
- DC_type AA (discharging only) (0x23): Uses direct current to discharge from the electric vehicle to the charger/discharger and type AA signals to communicate with the electric vehicle.
- DC_type BB (charging only) (0x31): Uses direct current to charge the electric vehicle and type BB signals to communicate with the electric vehicle.
- DC_type BB (charging/discharging) (0x32): Uses direct current to charge the electric vehicle and to discharge from the electric vehicle to the charger/discharger, and uses type BB signals to communicate with the electric vehicle.
- DC_type BB (discharging only) (0x33): Uses direct current to discharge from the electric vehicle to the charger/discharger and type BB signals to communicate with the electric vehicle.
- DC_type EE (charging only) (0x41): Uses direct current to charge the electric vehicle and type EE signals to communicate with the electric vehicle.
- DC_type EE (charging/discharging) (0x42): Uses direct current to charge the electric vehicle and to discharge from the electric vehicle to the charger/discharger, and uses type EE signals to communicate with the electric vehicle.
- DC_type EE (discharging only) (0x43): Uses direct current to discharge from the electric vehicle to the charger/discharger and type EE signals to communicate with the electric vehicle.
- DC_type FF (charging only) (0x51): Uses direct current to charge the electric vehicle and type FF signals to communicate with the electric vehicle.
- DC_type FF (charging/discharging) (0x52): Uses direct current to charge the electric vehicle and to discharge from the electric vehicle to the charger/discharger and type FF signals to communicate with the electric vehicle.
- DC_type FF (discharging only) (0x53): Uses direct current to discharge from the electric vehicle to the charger/discharger and type FF signals to communicate with the electric vehicle.

Explanation of the relationship between charger/discharger type and “Vehicle connection and



© 2000 - 2023 ECHONET Consortium

chargeable/dischargeable status" (0xC7)

- AC_CPLT (0x11): Always undetermined (0xFF).
- AC_HLC (charging only) (0x12) or AC_HLC (charging/discharging) (0x13): Undetermined (0xFF) when only CPLT functions are installed in the connected vehicle. When both CPLT and HLC functions are installed in the vehicle, the content is as indicated under vehicle connection and chargeable/dischargeable status (0xC7).
- DC_type AA (charging only) (0x21), DC_type AA (charging/discharging) (0x22) or DC_type AA (discharging only) (0x23): Undetermined (0xFF) until information is acquired via vehicle connection confirmation (0xCD). After information is acquired, the content is as indicated under vehicle connection and chargeable/dischargeable status (0xC7).
- DC_type BB (charging only) (0x31), DC_type BB (charging/discharging) (0x32), DC_type BB (discharging only) (0x33), DC_type EE (charging only) (0x41), DC_type EE (charging/discharging) (0x42), DC_type EE (discharging only) (0x43), DC_type FF (charging only) (0x51), DC_type FF (charging/discharging) (0x52) or DC_type FF (discharging only) (0x53): Content is as indicated under vehicle connection and chargeable/dischargeable status (0xC7).

(17) Vehicle connection confirmation

This property confirms the connection status between an electric vehicle charger/discharger and an electric vehicle. "Connection status" shall mean a status that a charger/discharger connector is locked and/or a signal line between the charger/discharger and a vehicle is connected.

This property is only mandatory if the electric vehicle charger/discharger type is one of DC_type AA (charging only) (0x21), DC_type AA (charging/discharging) (0x22), and DC_type AA (discharging only) (0x23).

(18) Used capacity of vehicle mounted battery 1 (total battery capacity)

This property indicates the capacity of a vehicle battery connected to an electric vehicle charger/discharger in Wh. The property value range is 0x00000000 to 0x3B9AC9FF (0 to 999,999,999Wh).

Shall be output based on information acquired from the vehicle.

(19) Used capacity of vehicle mounted battery 2

This property indicates the capacity of a vehicle battery connected to an electric vehicle charger/discharger in units of 0.1Ah. The property value range is 0x0000 to 0x7FFE (0 to 3,276.6Ah).



© 2000 - 2023 ECHONET Consortium

(20) Rated voltage

This property indicates the normal rated voltage of an electric vehicle charger/discharger in V. The property value range is 0x0000 to 0x7FFE (0 to 32,766V).

(21) Measured instantaneous charging/discharging electric power

This property indicates the instantaneous charging or discharging electric power of an electric vehicle charger/discharger in W. The property value range is 0x00000001 to 0x3B9AC9FF (1 to 999,999,999W) for charging and 0xFFFFFFFF to 0xC4653601 (-1 to -999,999,999W) for discharging. When the property value of the actual device is higher than the upper limit of the value range, the overflow code 0x7FFFFFFF shall be used. When the property value is lower than the lower limit of the value range, the underflow code 0x80000000 shall be used. The value is 0 for no charging or discharging.

(22) Measured instantaneous charging/discharging current

This property indicates the instantaneous charging or discharging current of an electric vehicle charger/discharger in units of 0.1A. The property value range is 0x0001 to 0x7FFE (0.1 to 3,276.6A) for charging and 0xFFFF to 0x8001 (-0.1 to -3,276.7A) for discharging. When the property value of the actual device is higher than the upper limit of the value range, the overflow code 0x7FFF shall be used. When the property value is lower than the lower limit of the value range, the underflow code 0x8000 shall be used. The value is 0 for no charging or discharging.

(23) Measured instantaneous charging/discharging voltage

This property indicates the instantaneous charging or discharging voltage of an electric vehicle charger/discharger in V. The property value range is 0x0001 to 0x7FFE (1 to 32,766V) for charging and 0xFFFF to 0x8001 (-1 to -32,767V) for discharging. When the property value of the actual device is higher than the upper limit of the value range, the overflow code 0x7FFF shall be used. When the property value is lower than the lower limit of the value range, the underflow code 0x8000 shall be used. The value is 0 for no charging or discharging.

(24) Measured cumulative amount of discharging electric energy

This property indicates the cumulative amount of discharging electric energy of an electric vehicle charger/discharger in units of 0.001kWh. The property value range is 0x00000000 to 0x3B9AC9FF (0 to 999,999.999kWh). When the cumulative amount of electric energy overflows, the property value shall be incremented again from 0x00000000.

(25) Cumulative amount of discharging electric energy reset setting



© 2000 - 2023 ECHONET Consortium

This property is set to 0x00 to reset the measured cumulative amount of discharging electric energy to zero.

(26) Measured cumulative amount of charging electric energy

This property indicates the cumulative amount of charging electric energy of an electric vehicle charger/discharger in units of 0.001kWh. The property value range is 0x00000000 to 0x3B9AC9FF (0 to 999,999.999kWh). When the cumulative amount of electric energy overflows, the property value shall be incremented again from 0x00000000.

(27) Cumulative amount of charging electric energy reset setting

This property is set to 0x00 to reset the measured cumulative amount of charging electric energy to zero.

(28) Operation mode setting

This property indicates the operation mode of an electric vehicle charger/discharger. The operation mode are Charging (0x42), Discharging (0x43), Standby (0x44), Charging/Discharging (0x46), Idle (0x47), Preparation (0x48), Automatic (0x49), and Other (0x40).

Operation mode “Other” indicates that the charger/discharger does not fall into any one of Charging, Discharging, Standby, Charge/Discharge, Idle, Preparation, or Automatic modes.

Standby (0x44) indicates a state that the power converter is halted and it can automatically switch to charging or discharging when it detects a chargeable/dischargeable electric vehicle connected.

Idle (0x47) indicates a state that the power converter operation is halted and it is unable to automatically switch to charging or discharging even if it detects that a chargeable/dischargeable electric vehicle is connected to the charger/discharger. Note that “a state that it is unable to switch” depends on the implementation of the charger/discharger, such as being disconnected from the system power or being out of communication with the vehicle.

However, if only one of Standby (0x44) or Idle (0x47) is implemented, Standby or Idle shall mean “a state that the power converter operation is halted”.

Charging/Discharging mode (0x46) is a mode that the electric vehicle charger/discharger automatically switches to charging or discharging. Its operation may include load-following discharging for discharging and surplus electric power charging for charging in order to effectively use solar power generation as self-consumption.

The following figure shows an operation concept of Charging/Discharging (0x46).

Automatic (0x49) mode automatically switches between charging and discharging on the side of the electric vehicle charger/discharger, similar to Charging/Discharging (0x46). However, unlike Charging/Discharging (0x46), the charging and discharging methods do not depend on the



© 2000 - 2023 ECHONET Consortium

Charging method property (EPC = 0xDC) and the Discharge method property (0xDD), but rather on the implementation of the electric vehicle charger/discharger.

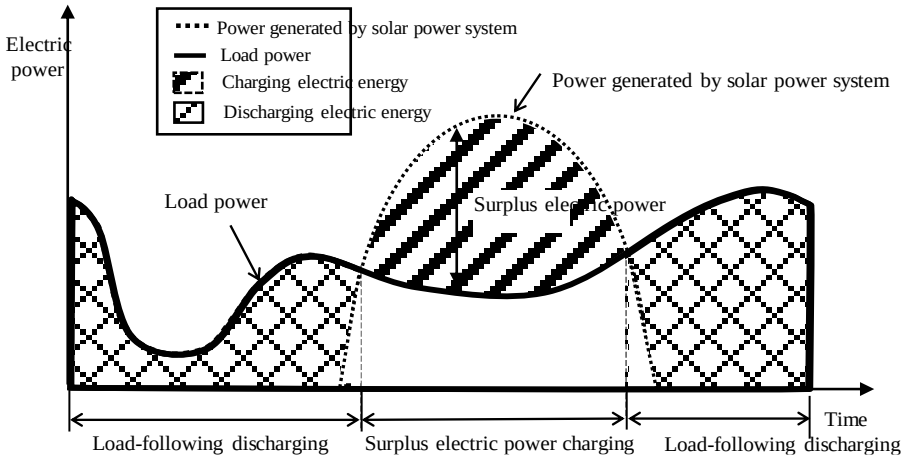


Preparation (0x48) indicates a state in which the electric vehicle charger/discharger is unable to shift to charging or discharging upon receiving a charge, discharge, or charge/discharge write request. For example, the following conditions can be considered:

・Waiting time for intercepting system re-interconnection: A certain period of time after power is restored from a power failure

・During local operation: When the main unit does not accept write requests Or, when performing manual operations such as changing settings on the main unit

・During fault status: When the fault status (0x88) is Detected (0x41)

・During internal processing of the main unit: When charging or discharging cannot be temporarily performed due to a firmware update or the like

When a write request for Charging, Discharging, or Charging/Discharging is received in the Preparation (0x48) state, charging or discharging may be started after the situation in which charging or discharging cannot be started is resolved. However, the property value must not be updated immediately when the write request is received.

(29) System interconnection status

This property indicates the current interconnection status of the electric vehicle charger/discharger to the system (system interconnection status).

System interconnected (reverse power flow acceptable) = 0x00, Independent = 0x01, System interconnected (reverse power flow not acceptable) = 0x02

(30) Charging method



© 2000 - 2023 ECHONET Consortium

This property indicates the charging method when the operation mode setting (EPC=0xDA) is set charging (0x42), standby (0x44), or charging/discharging (0x46). Charging methods include: charging (0x01) with maximum charging electric power (EPC=0xC8), charging (0x02) with surplus electric power of solar power generation, charging (0x03) with designated power indicated by charging electric power setting (EPC=0xEB), charging (0x04) with designated current indicated by charging current setting (EPC=0xED), charging (0x05) with designated purchasing power indicated by purchasing electric power setting (EPC=0xDE), V2G (0x06) that charges at the charging/discharging electric power setting (EPC=0xE0), and others (0x00). Those indicated as "others" are charging methods that do not fall into any other charging methods. If charging/discharging (0x46) is specified, the electric vehicle charger/discharger shall autonomously perform charging (0x05) at equal to or less than the designated purchasing power indicated by purchasing electric power setting (EPC=0xDE), or charging (0x02) with surplus electric power of solar power generation. Note that there are some cases where this property value changes to designated electric power charging (0x03) by setting the charging electric power setting (EPC=0xEB), or this property value changes to designated current charging (0x04) by setting the charging current setting (EPC=0xED).
When this property value changes according to receiving of a write request for this property, the operation mode setting property basically shall not be changed. However, in the case of a transition to V2G (0x06), if the property value of charging/discharging electric power setting (EPC = 0xE0) is 0, the operation mode setting shall transit to "standby" (0x44); if the property value is positive, the operation mode setting shall transit to charging (0x42).

In case where charging/discharging is to be performed with the Charging/discharging electric power setting (EPC = 0xE0), the property value of this property shall be set to V2G (0x06) before sending a write request for the Charging/discharging electric power setting (EPC = 0xE0). Note that when the value of this property is V2G (0x06), the write request to the Charging electric power setting (EPC = 0xEB) shall not be accepted so that charging/discharging will not start. When the value of this property is other than V2G, the write request to the Charging/discharging electric power setting (EPC = 0xE0) shall not be accepted so that charging/discharging will not start.
The relationship between the operation mode setting, charging method, and discharging method properties is shown below.



© 2000 - 2023 ECHONET Consortium

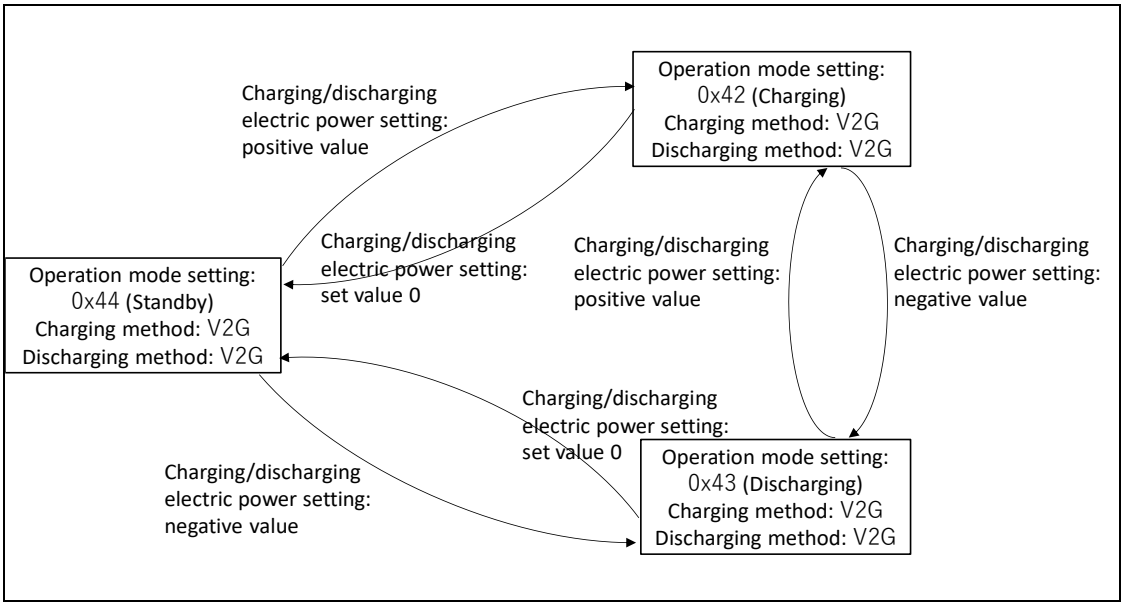


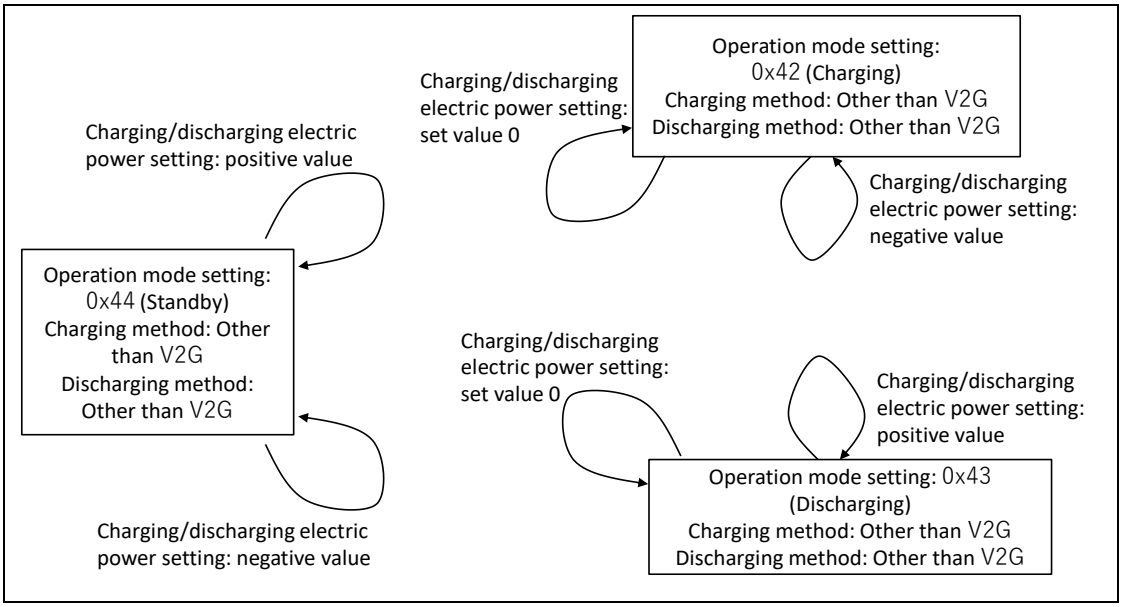


(31) Discharging method

This property indicates the discharging method when the operation mode setting (EPC=0xDA) is set discharging (0x43), standby (0x44), or charging/discharging (0x46). Discharging methods include: discharging (0x01) with maximum discharging electric power (EPC=0xC9), discharging (0x02) following to household load power, discharging (0x03) with designated power indicated by discharging electric power setting (EPC=0xEC), discharging (0x04) with designated current indicated by discharging current setting (EPC=0xEE), discharging (0x05) with designated purchasing power indicated by purchasing electric power setting (EPC=0xDE),

V2G (0x06) for discharging at the Charging/discharging electric power setting (EPC = 0xE0),



© 2000 - 2023 ECHONET Consortium

and others (0x00). “Others” mean the discharging methods that do not fall into any of these discharging methods.

If charging/discharging (0x46) is specified, the electric vehicle charger/discharger shall autonomously perform discharging (0x05) at equal to or less than the designated purchasing power indicated by purchasing electric power setting (EPC=0xDE), or discharging (0x02) following to household load power.

Note that there are some cases that this property value changes to designated electric power discharging (0x03) by setting discharging electric power setting (EPC=0xEC), or this property value changes to designated current discharging (0x04) by setting the discharging current setting (EPC=0xEE).

When the property value changes according to the receiving of a write request for this property, the operation mode setting basically shall not be changed. However, in the case of a transition to V2G (0x06), if the property value of Charging/discharging electric power setting (EPC = 0xE0) is 0, the operation mode setting shall transit to “standby” (0x44); if the property value is negative, the operation mode setting shall transit to discharging (0x43).

In case where charging or discharging is to be performed with the Charging/discharging electric power setting (EPC = 0xE0), the property value of this property shall be set to V2G (0x06) before sending a write request for the Charging/discharging electric power setting (EPC = 0xE0).

Note that when the value of this property is V2G (0x06), the write request to the Discharging electric power setting (EPC = 0xEC) shall not be accepted and charging or discharging will not start. When the value of this property is other than V2G, the write request to the Charging/discharging electric power setting (EPC = 0xE0) shall not be accepted and charging or discharging will not start.

(32) Purchasing electric power setting

This property specifies the upper limit of the purchasing electric power in W. The property value range is 0x00000000 to 0x3B9AC9FF (0 to 999,999,999W). Electric vehicle charger/discharger charges or discharges so that the household purchasing electric power reaches the setting value. If operation mode (EPC=0xDA) is set to discharging (0x43) and when the household purchasing electric power exceeds the setting value, the charger/discharger shall discharge the excess electric power. Note that the charger/discharger will not discharge when the household purchasing electric power does not exceed the setting value and in the case, the household purchasing electric power does not reach the setting value. If the operation mode (EPC=0xDA) is set to charging (0x42) and when the household purchasing electric power is less than the setting value, the charger/discharger shall charge the shortage. Note that the charger/discharger will not charge if the household



© 2000 - 2023 ECHONET Consortium

purchasing electric power exceeds the setting value and in this case, the household purchasing electric power does not become the setting value. If the operation mode (EPC=0xDA) is set to charging/discharging (0x46), the charger/discharger shall discharge the excess electric power when the household purchasing electric power exceeds the setting value, and shall charge the shortage when the household purchasing electric power is less than the setting value. Note that this setting shall be effective when the charging method (EPC=0xDC) is designated purchasing electric power charging (0x05), or when the discharging method (EPC=0xDD) is designated purchasing electric power discharging (0x05).

The first figure shows the operation overview in designated purchasing electric power discharging.

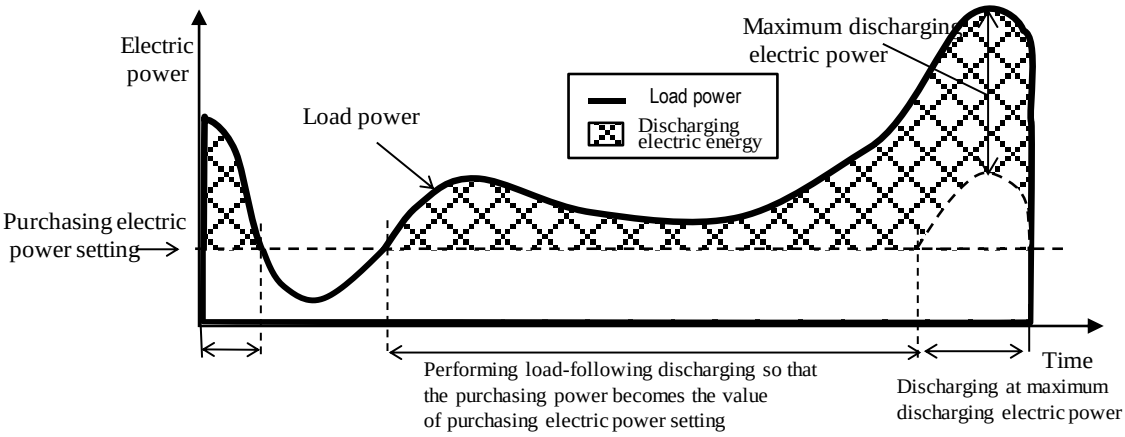


The second figure shows the operation overview in designated purchasing electric power charging.

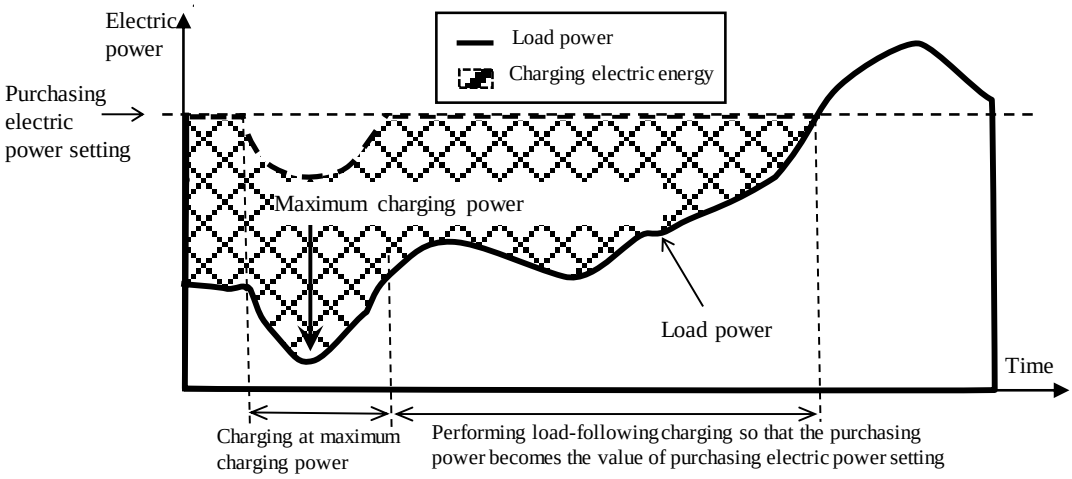


(33) Re-interconnection permission setting



© 2000 - 2023 ECHONET Consortium

After an electric vehicle charger/discharger split from system due to power failure, there are cases where prior consultation with the power company is necessary regarding system interconnection (re-interconnection) after restoration of system power. If system re-interconnection after restoration of power is not possible automatically, set the value for this property to (0x42) at the point in time when a system splitting occurs in the electric vehicle charger/discharger due to power failure, etc., and wait to receive a write request for re-interconnection permission (0x41) after restoration of power.

(34) Charging/discharging electric power setting

This property specifies the charging/discharging electric power in watts. The property value range shall be 0x00000001 to 0x3B9AC9FF (1 to 999,999,999): charging (positive), 0xFFFFFFFF to 0xC4653601 (-1 to -999,999,999W): discharging (negative). The property value of the charging/discharging electric power setting shall be a value that is not changed except when a write request is received.

If the value of the charging method property (0xDC) is V2G (0x06) or the value of the discharging method property (0xDD) is V2G (0x06), the operation mode setting property (0xDA) shall be set to charging (0x42) when a write request specifying a positive value for this property is received. The operation mode setting property (0xDA) shall be set to discharging (0x43) when a write request specifying a negative value for this property is received. The operation mode setting property (0xDA) shall be set to standby (0x44) when a write request specifying zero for this property is received.

If the value of the charging method property (0xDC) is other than V2G (0x06), the values of the operation mode setting property and this property shall not be changed even when a write request specifying a positive value or zero for this property is received.

If the value of the discharging method property (0xDD) is other than V2G (0x06), the values of the operation mode setting property and this property shall not be changed even when a write request specifying a negative value or zero for this property is received.

(35) Working operation status

Working operation statuses of electric vehicle charger/discharger are Charging (0x42), Discharging (0x43), Standby (0x44), Idle (0x47), preparation (0x48), Automatic (0x49) and Other (0x40). If this property is implemented, the operating statuses of Charging, Discharging, and either Standby or Halt are required.

Note that Charging/Discharging status is not included in the value range of this property since the charger/discharger takes one of the operation statuses of Charging, Discharging, Standby, and etc, when the operation mode setting is set to Charging/Discharging.



© 2000 - 2023 ECHONET Consortium

(36) Remaining stored electric energy of vehicle mounted battery 1

This property indicates the remaining stored capacity of a vehicle battery connected to an electric vehicle charger/discharger in Wh. The property value range is 0x00000000 to 0x3B9AC9FF (0 to 999,999,999Wh).

Based on information obtained from the vehicle, calculation can be implemented using following formula (example): Note that the charge/discharge efficiency shall not be included in the electric vehicle charger/discharger.

Total battery capacity × charging rate of the battery ÷ 100

(37) Remaining stored electric energy of vehicle mounted battery 2

This property indicates the remaining stored capacity of a vehicle battery connected to an electric vehicle charger/discharger in units of 0.1Ah. The property value range is 0x0000 to 0x7FFE (0 to 3,276.6Ah).

(38) Remaining stored electric energy of vehicle mounted battery 3 (charging rate)

This property indicates the remaining stored capacity (SOC: State of Charge) of a vehicle battery connected to a charger/discharger in %. The property value range is 0x00 to 0x64 (0 to 100%).

Shall be output based on information acquired from the vehicle.

(39) Charging amount setting 1

This property specifies the charging electric energy in Wh. The property value range is 0x00000000 to 0x3B9AC9FF (0 to 999,999,999Wh). The property value “0x00000000” shall be “not set”. During charging operation based on this setting value, there is no change in the value based on the charging energy (there is no successive change corresponding to actual performance of charging energy). If this property is set during charging operation based on this setting value, charging shall start based on the cumulative value of electric energy from the point in time indicated by the charging amount setting if reflected, regardless of the charged amount. When charging operation based on this setting value is completed, the operation mode setting becomes “Standby”. There are also cases where charging ends without the electric energy set for this setting value being charged. If charging until the chargeable capacity of vehicle mounted battery becomes 0, specify a value greater than the chargeable capacity of vehicle mounted battery for this setting value.

(40) Charging amount setting 2

This property specifies the charging capacity in units of 0.1Ah. The property value range is 0x0000 to 0x7FFE (0 to 3,276.6Ah). The property value “0x00000” shall be “not set”. During



© 2000 - 2023 ECHONET Consortium

charging operation based on this setting value, there is no change in the value based on the charging energy (there is no successive change corresponding to actual performance of charging energy). If this property is set during charging operation based on this setting value, charging shall start based on the cumulative value of electric energy from the point in time indicated by the charging amount setting if reflected, regardless of the charged amount. When charging operation based on this setting value is completed, the operation mode setting becomes “Standby”. There are also cases where charging ends without the electric energy set for this setting value being charged. If charging until the chargeable capacity of vehicle mounted battery becomes 0, specify a value greater than the rated capacity.

(41) Charging electric power setting

This property specifies the charging electric power in W. The property value range is 0x00000000 to 0x3B9AC9FF (0 to 999,999,999W).

(42) Discharging electric power setting

This property specifies the discharging electric power in the system interconnected status in W. The property value range is 0x00000000 to 0x3B9AC9FF (0 to 999,999,999W). In the independent status, “Response impossible” is returned.

(43) Charging current setting

This property specifies the charging current in units of 0.1A. The property value range is 0x0000 to 0xFFFD (0 to 6,553.3A).

(44) Discharging current setting

This property specifies the discharging current in the system interconnected status in units of 0.1A. The property value range is 0x0000 to 0xFFFD (0 to 6,553.3A). In the independent status, “Response impossible” is returned.

(45) Rated voltage (in independent status)

This property indicates the rated voltage (catalog value) in V when the system interconnection status is Independent. The property value range is 0x0000 to 0x7FFE (0 to 32,766V). In case this property is not used, the rated voltage (EPC = 0xD2) may be used instead.

(46) Chargeable capacity of vehicle mounted battery

This property indicates the chargeable capacity of a vehicle battery connected to an electric vehicle charger/discharger in a unit of “Wh”. The property value range is 0x00000000 to 0x3B9AC0FF (0



© 2000 - 2023 ECHONET Consortium

to 999,999,999 Wh).

Based on information obtained from the vehicle, calculation can be implemented using following formula (example):

(Total battery capacity × charge upper limit for charging rate ÷ 100) ÷ charger/discharger charge efficiency

(47) Remaining chargeable capacity of vehicle mounted battery

This property indicates the remaining chargeable capacity of a vehicle battery connected to an electric vehicle charger/discharger in a unit of Wh. The property value range is 0x00000000 to 0x3B9AC0FF (0 to 999,999,999 Wh).

Based on information obtained from the vehicle, calculation can be implemented using following formula (example):

(Total battery capacity× (charge upper limit for charging rate－charging rate of the battery) ÷ 100) ÷ charger/discharger charge efficiency

(48) Vehicle ID

This property stores the data size of the vehicle ID information of an electric vehicle connected to an electric vehicle charger/discharger and vehicle ID information. Data length shall be variable, and it shall be vehicle ID information + 1. If vehicle ID cannot be acquired, 0x00 shall be stored in the first byte (number of bytes of vehicle ID information). In this case, data size shall be 1 byte.

| **Data size of the vehicle ID information** (1 byte) | **Vehicle ID information** (Max 24 bytes) |
|---|---|

Note that this property shall be effective when the value of the vehicle connection and chargeable/dischargeable status (0xC7) is 0x40-0x44. Using the vehicle ID for billing purposes is not recommended due to potential security issues.

(49) Discharging amount setting

This property specifies the discharging electric energy in a unit of “Wh”. The property value range is 0x00000000 to 0x3B9AC0FF (0 to 999,999,999 Wh). The property value “0x00000000” shall be “not set”. During discharging operation based on this setting value, there is no change in the value based on the discharging energy (there is no successive change corresponding to actual performance of discharging energy). If this property is set during discharging operation based on this setting value, discharging shall be started based on a cumulative value for electric energy from a point of time that discharging amount setting if reflected, regardless the discharged amount. When



© 2000 - 2023 ECHONET Consortium

discharging operation based on this setting value is completed, the operation mode setting becomes "Standby". There are also cases where discharging ends without the electric energy set for this setting value being discharged. If charging until the dischargeable capacity of vehicle mounted battery becomes 0, specify a value greater than the dischargeable capacity of vehicle mounted battery for this setting value.

(50) Maintenance status

When maintenance is required, this property shall be set to Occurrence (0x41), but operation can be continued. Normal state with no necessity for maintenance is No occurrence = 0x42.

For example, cases where consumables in the main unit need to be replaced due to dirty filters, lowered fan speed, or deteriorating batteries can be considered.



© 2000 - 2023 ECHONET Consortium

# 3. 3. 19 Requirements for engine cogeneration class

Class group code : 0x02

Class code : 0x7F

Instance code : 0x01 to 0x7F (0x00: All instance specification code)

| Property name | EPC | Contents of property<br>Value range (decimal notation) | Data type | Data size | Unit | Access rule | Man-datory | Announcement at status change | Remark |
|---|---|---|---|---|---|---|---|---|---|
| Operation status | 0x80 | This property indicates the ON/OFF status.<br>ON=0x30, OFF=0x31 | unsigned char | 1 byte | – | Set<br>Get | <br>○ | ○ | |
| Measured temperature of water in water heater | 0xC1 | This property indicates the current temperature of the water in the water heater in °C.<br>0x00–0x64 (0–100°C) | unsigned char | 1 byte | °C | Get | | | |
| Rated power generation output | 0xC2 | This property indicates the rated power generation output in watts.<br>0x0000–0xFFFD<br>(0–65,533W) | unsigned short | 2 bytes | W | Get | | | |
| Heating value of hot water storage tank | 0xC3 | This property indicates the heating value of the hot water storage tank in MJ.<br>0x0000–0xFFFD<br>(0–65,533MJ) | unsigned short | 2 bytes | MJ | Get | | | |
| Measured instantaneous power generation output | 0xC4 | This property indicates the instantaneous power generation output in watts.<br>0x0000–0xFFFD<br>(0–65,533W) | unsigned short | 2 bytes | W | Get | ○ | | |
| Measured cumulative energy generation output | 0xC5 | This property indicates the cumulative energy generation output in units of 0.001kWh.<br>0x00000000–0x3B9AC9FF<br>(0–999,999.999kWh) | unsigned long | 4 bytes | 0.001 kWh | Get | ○ | | |
| Cumulative energy generation output reset setting | 0xC6 | Resets the cumulative energy generation output by writing 0x00.<br>Reset=0x00 | unsigned char | 1byte | — | Set | | | |
| Measured instantaneous gas consumption | 0xC7 | This property indicates the instantaneous gas consumption in increments of 0.001m$^3$/h.<br>0x0000–0xFFFD<br>(0–65.533m$^3$/h) | unsigned short | 2 bytes | 0.001 m$^3$/h | Get | | | |
| Measured cumulative gas consumption | 0xC8 | This property indicates the cumulative gas consumption in increments of 0.001m$^3$.<br>0x00000000–0x3B9AC9FF<br>(0–999,999.999m$^3$) | unsigned long | 4 bytes | 0.001 m$^3$ | Get | | | |
| Cumulative gas consumption reset setting | 0xC9 | Resets the cumulative gas consumption by writing 0x00.<br>Reset=0x00 | unsigned char | 1 byte | — | Set | | | |



© 2000 - 2023 ECHONET Consortium

| | | | | | | | | | |
|---|---|---|---|---|---|---|---|---|---|
| Power generation setting | 0xCA | This property indicates the setting of start or stop of power generation.<br>Power generation ON=0x41,<br>Power generation OFF=0x42 | unsigned char | 1 byte | — | Set/Get | | | |
| Power generation status | 0xCB | This property indicates power generation status.<br>generating =0x41, stopped=0x42, idling=0x45 | unsigned char | 1 byte | — | Get | | | |
| Measured in-house instantaneous power consumption | 0xCC | This property indicates the measured in-house instantaneous power consumption in watts.<br>0x0000-0xFFFD (0-65.533W) | unsigned short | 2 bytes | W | Get | | | |
| Measured in-house cumulative energy consumption | 0xCD | This property indicates the measured in-house cumulative energy consumption in units of 0.001kWh.<br>0x00000000-0x3B9AC9FF<br>(0-999,999.999kWh) | unsigned long | 4 bytes | 0.001 kWh | Get | | | |
| In-house cumulative energy consumption reset | 0xCE | By setting 0 to this property, the measured in-house cumulative energy consumption is reset.<br>Reset=0x00 | unsigned char | 1 byte | | Set | | | |
| System interconnection status | 0xD0 | This property indicates the status of system interconnection.<br>System interconnected (reverse power flow acceptable)=0x00, Independent=0x01, System interconnected (reverse power flow not acceptable)=0x02 | unsigned char | 1 byte | — | Get | | | |
| Measured remaining hot water amount | 0xE1 | This property indicates the measured amount of the remaining hot water in liters.<br>0x0000–0xFFFD (0–65,533 liters) | unsigned short | 2 bytes | liter | Get | | | |
| Tank capacity | 0xE2 | This property indicates the tank capacity in liters.<br>0x0000–0xFFFD (0–65,533 liters) | unsigned short | 2 bytes | liter | Get | | | |

Note: In the “Announcement at status change” column, ○ denotes mandatory processing when the property is implemented.

(1) Operation status (a property inherited from the device object super class)

This property indicates whether the functions specific to this class are operating (ON) or not (OFF). In the case of a node in which this class is implemented and the functions specific to this class start operating upon startup of the node, this property may be implemented with the value fixed at 0x30 (operation status ON).

(2) Measured hot water temperature of water heater

This property indicates the current hot water temperature in the hot water storage tank in °C. The property value range is 0x00 to 0x64 (0 to 100°C).



© 2000 - 2023 ECHONET Consortium

(3) Rated power generation output

This property indicates the rated power generation output in watts. The property value range is 0x0000 to 0xFFFD. When the property value of the actual device is higher than the upper bound of the value range, 0xFFFF (overflow code) shall be used. When the property value of the actual device is lower than the lower bound of the value range, 0xFFFE (underflow code) shall be used.

(4) Heating value of hot water storage tank

This property indicates the heating value of a hot water storage tank in MJ. The property value range is 0x0000 to 0xFFFD. When the property value of the actual device is higher than the upper bound of the value range, 0xFFFF (overflow code) shall be used. When the property value of the actual device is lower than the lower bound of the value range, 0xFFFE (underflow code) shall be used.

(5) Measured instantaneous power generation output

This property indicates the instantaneous power generation output in watts. The property value range is 0x0000 to 0xFFFD. When the property value of the actual device is higher than the upper bound of the value range, 0xFFFF (overflow code) shall be used. When the property value of the actual device is lower than the lower bound of the value range, 0xFFFE (underflow code) shall be used.

(6) Measured cumulative energy generation output

This property indicates the cumulative energy generation output in units of 0.001kWh. The property value range is 0x00000000 to 0x3B9AC9FF (0 to 999,999.999 kWh). In case the cumulative energy generation output goes overflow, the measured cumulative energy generation output shall be restarted from 0x00000000.

(7) Cumulative energy generation output reset setting

Resets the cumulative energy generation output to zero by setting 0x00.

(8) Measured instantaneous gas consumption

This property indicates the instantaneous gas consumption in units of 0.001m3/h. The property value range is 0x0000 to 0xFFFD. (0 to 65.533 m3/h) When the property value of the actual device is higher than the upper bound of the value range, 0xFFFF (overflow code) shall be used. When the property value of the actual device is lower than the lower bound of the value range, 0xFFFE (underflow code) shall be used.

(9) Measured cumulative gas consumption

This property indicates the cumulative gas consumption in units of 0.001m3. The property value



© 2000 - 2023 ECHONET Consortium

range is 0x00000000 to 0x3B9AC9FF (0 to 999,999.999 m3). In the event of a cumulative gas consumption overflow, the counting of the cumulative gas consumption shall be restarted from 0x00000000.

(10) Cumulative gas consumption reset setting

This property resets the cumulative gas consumption to zero by setting 0x00.

(11) Power generation setting

This property indicates the setting of power generation by the engine cogeneration. The property value for power generation ON is 0x41, and the property value for power generation OFF is 0x42.

(12) Power generation status

This property indicates the power generation status of the engine cogeneration. The property value for generating is 0x41, the property value for stopped is 0x42 and the property value for idling is 0x45.

(13) Measured in-house instantaneous power consumption

This property indicates the in-house instantaneous power consumption in watts. The property value range is 0x0000 to 0xFFFD. When the property value of the actual device is higher than the value range of this property, the overflow code 0xFFFF shall be used. When the property value is lower than the value range of this property, the underflow code 0xFFFE shall be used.

In-house instantaneous power consumption is the sum of power where an anti-reverse power flow CT is installed and the power output.

(14) Measured in-house cumulative energy consumption

This property indicates the in-house cumulative energy consumption in units of 0.001kWh. The property value range is 0x00000000 to 0x3B9AC9FF (0 to 999,999.999kWh) and increments again from 0x00000000 in case of the cumulative energy consumption goes overflow.

In-house cumulative energy consumption is a sum of the cumulative energy at the reverse power flow protection CT and the cumulative energy of the generated energy output.

(15) In-house cumulative energy consumption reset

By setting 0x00 to this property, the in-house cumulative energy consumption is reset to zero.

(16) System interconnection status



© 2000 - 2023 ECHONET Consortium

This property indicates the current status of interconnection with the system (system interconnection status).

System interconnected (reverse power flow acceptable) = 0x00, Independent = 0x01, System interconnected (reverse power flow not acceptable) = 0x02.

(17) Measured remaining hot water amount

This property indicates the amount of hot water remaining in the tank in liters. The property value range is 0x0000 to 0xFFFD (from 0 to 65,533 liters). When the property value of the actual device is higher than the upper bound of the value range, 0xFFFF (overflow code) shall be used. When the property value of the actual device is lower than the lower bound of the value range, 0xFFFE (underflow code) shall be used.

(18) Tank capacity

This property indicates the tank capacity in liters. The property value range is 0x0000 to 0xFFFD (0 to 65,533 liters). When the property value of the actual device is higher than the upper bound of the value range, 0xFFFF (overflow code) shall be used. When the property value of the actual device is lower than the lower bound of the value range, 0xFFFE (underflow code) shall be used.



© 2000 - 2023 ECHONET Consortium

## 3．3．20 Requirements for watt-hour meter class

Class group code : 0x02

Class code : 0x80

Instance code : 0x01–0x7F (0x00: All-instance specification code)

| Property name | EPC | Contents of property<br>Value range (decimal notation) | Data type | Data size | Unit | Access rule | Man-datory | Announce-ment at status change | Remark |
|---|---|---|---|---|---|---|---|---|---|
| Operation status | 0x80 | This property indicates the ON/OFF status.<br>ON=0x30, OFF=0x31 | unsigned char | 1 byte | — | Set<br>Get | <br>○ | ○ | |
| Cumulative amount of electric energy measurement value | 0xE0 | This property indicates cumulative amount of electric energy in decimal (8 digits).<br>0x00000000–0x05F5E0FF (0–99,999,999) | unsigned long | 4 bytes | 0.1 or 0.01 kWh | Get | ○ | | |
| Cumulative amount of electric energy unit | 0xE2 | This property indicates number of decimal places of cumulative amount of electric energy (0xE0).<br>0x01 : 0.1kWh<br>0x02 : 0.01kWh | unsigned char | 1 byte | — | Get | ○ | | |
| Cumulative amount of electric energy measurement log 1 | 0xE3 | This property indicates cumulative amount of electric energy (8 digits) measurement result log in 30-minute segments for past 24 hours.<br>0x00000000–0x05F5E0FF (0–99,999,999) | unsigned long × 48 | 192 bytes | 0.1 or 0.01 kWh | Get | | | |
| Cumulative amount of electric energy measurement log 2 | 0xE4 | This property indicates cumulative amount of electric energy (8 digits) measurement result log for past 24 hours as one-day data in 30-minute segments for the past 45 days.<br>0x00000000–0x05F5E0FF (0–99,999,999) | unsigned long × 48 × 45 | 192 bytes × 45 | 0.1 or 0.01 kWh | GetM | | | |

Note: In the “Announcement at status change” column, ○ denotes mandatory processing when the property is implemented.

(1) Operation status (inherited from the device object super class property)

This property indicates whether the function native to this class is operating or not (ON/OFF). In the node mounting this class, if the function of this class is started concurrently with the start of node operation, this property may be implemented at a fixed value of 0x30 (Operation status ON).

(2) Cumulative amount of electric energy measurement value

This property indicates the cumulative usage of electricity (up to 8 digits in decimal notation). The unit of cumulative usage of electricity is given by the “Cumulative amount of electric energy unit” property (EPC = 0xE2). The unit shall be 0.1 kWh when the value of the “Cumulative amount of electric energy unit” property is 0x01 and 0.01 kWh when the value of the “Cumulative amount of



© 2000 - 2023 ECHONET Consortium

electric energy unit" property is 0x02. The property value range shall be 0x00000000 to 0x05F5E0FF (0 to 99,999,999). When the property value exceeds the upper limit of the property value range, the counter will be reset to 0x00000000 and counting will start again from 0x00000000.

(3) Cumulative amount of electric energy unit
This property indicates the number of decimal places of the cumulative amount of electric energy (EPC = 0xE0). When the property value is 0x01, "Cumulative amount of electric energy" (EPC = 0xE0) shall take the unit of 0.1 kWh. When the property is 0x02, "Cumulative amount of electric energy" (EPC = 0xE0) shall take the unit of 0.01 kWh.

(4) Cumulative amount of electric energy measurement log 1
This property indicates the cumulative amount of electric energy (EPC = 0xE0) measurement result log for the past 24 hours in 30-minute segments. The unit is indicated by the property value of "Cumulative amount of electric energy unit" (EPC = 0xE2). When "Cumulative amount of electric energy unit" (EPC = 0xE2) is 0x01, the unit shall be 0.1 kWh. When "Cumulative amount of electric energy unit" (EPC = 0xE2) is 0x02, the unit shall be 0.01 kWh. The measured value of cumulative amount of electric energy for each 30 minutes shall be based on the time to be set in the property name "Time setting" (EPC-0x97). The measured value in units of 8 digits at every 0 minutes and 30 minutes shall be the data of 0x00000000 to 0x05F5E0FF (0 to 99,999,999). The property value shall begin with the high-order byte in time series. For time data that is not yet measured for the measurement log, 0xFFFFFFFE shall be used.

(5) Cumulative amount of electric energy measurement log 2
This property indicates the historical cumulative usage data for the past 45 days in the form of an array with 45 elements, each of which contains the historical cumulative usage data for each day. Each array element has forty-eight 4-byte sub-elements, each of which contains the cumulative usage measurement (i.e. the value of the "cumulative amount of electric energy" property (EPC = 0xE0)) for each of the forty-eight 30-minute periods of the day (The first 30-minute period of the day starts at 0:00 as indicated by the "current time setting" property (EPC = 0x97) and the last 30-minute period of the day ends at 23:30 as indicated by the "current time setting" property). The unit shall be 0.1 kWh when the value of the "Cumulative amount of electric energy unit" property (EPC = 0xE2) is 0x01 and 0.01 kWh when the value of the "Cumulative amount of electric energy unit" property is 0x02. The value range for each sub-element shall be 0x00000 to 0x05F5E0FF (0 to 99,999,999). The historical cumulative usage data shall be arranged in chronological order on both the array element and sub-element levels. If there is any 30-minute period for which measurement does not exist, 0xFFFFFFFE shall be used as the value for that period.



© 2000 - 2023 ECHONET Consortium

# 3．3．21 Requirements for water flowmeter class

Class group code : 0x02

Class code : 0x81

Instance code : 0x01–0x7F (0x00: All-instance specification code)

| Property name | EPC | Contents of property<br>Value range (decimal notation) | Data type | Data size | Unit | Access rule | Mandatory | Announcement at status change | Remark |
|---|---|---|---|---|---|---|---|---|---|
| Operation status | 0x80 | This property indicates the ON/OFF status.<br>ON=0x30, OFF=0x31 | unsigned char | 1 byte | — | Set<br>Get | <br>○ | ○ | |
| Water flow meter classification | 0xD0 | This property indicates the water flowmeter type.<br>0x30 : running water<br>0x31 : recycled water<br>0x32 : sewage water<br>0x33 : other water | unsigned char | 1 byte | — | Set/Get | | | |
| Owner classification | 0xD1 | This property indicates the owner of the meter in the form of owner classification.<br>0x30 : Not specified<br>0x31 : Public waterworks company<br>0x32 : Private sector company<br>0x33 : Individual | unsigned char | 1 byte | — | Set/Get | | | |
| Measured cumulative amount of flowing water | 0xE0 | This property indicates the cumulative amount (consumption) of flowing water using a 9-digit number.<br>0x00000000–0x3B9AC9FF<br>(0–999,999,999) | unsigned long | 4 bytes | $m^3$ | Get | ○ | | |
| Unit for measured cumulative amounts of flowing water | 0xE1 | This property indicates the unit (multiplying factor) for the measured cumulative amount of flowing water and the historical data of measured cumulative amounts of flowing water 2.<br>0x00: $1m^3$<br>0x01: $0.1m^3$<br>0x02: $0.01m^3$<br>0x03: $0.001m^3$<br>0x04: $0.0001m^3$ (Initial value)<br>0x05: $0.00001m^3$<br>0x06: $0.000001m^3$ | unsigned char | 1 byte | — | Get | ○ | | |
| Historical data of measured cumulative amounts of flowing water | 0xE2 | This property indicates the historical data of measured cumulative amounts (consumptions) of running water, which consists of 48 pieces of half-hourly data for the preceding 24 hours.<br>0x00000000–0x3B9AC9FF<br>(0–999,999.999$m^3$) | unsigned long × 48 | 192 bytes | 0.001 $m^3$ | Get | | | |



© 2000 - 2023 ECHONET Consortium

| | | | | | | | | | |
|---|---|---|---|---|---|---|---|---|---|
| Detection of abnormal value in metering data | 0xE3 | This property indicates whether the meter has detected an abnormal value in the metering data.<br>Abnormal value detected: 0x41<br>No abnormal value detected: 0x42 | unsigned char | 1 byte | — | Get | | ○ | |
| Security data information | 0xE4 | Provides security information about the abnormal states detected by the meter in the form of security data that identifies the abnormal states by means of bit assignment.<br>0–0xFFFFFFFF | unsigned long | 4 bytes | — | Get | | | |
| ID number setting | 0xE5 | This property indicates the ID number of the meter.<br>The ID number is specified using ASCII code.<br>(Initial value : “000000”) | unsigned char | 6 bytes | | Set/Get | | | |
| Verification expiration information | 0xE6 | This property indicates the month and year in which the verification of the meter will expire.<br>The month and year are specified using ASCII code.<br>xxxx xx<br>Year Month | unsigned char | 6 bytes | | Set/Get | | | |
| Historical data of measured cumulative amounts of flowing water 2 | 0xE7 | This property indicates the historical data of measured cumulative amounts (consumptions) of running water, which consists of 48 pieces of half-hourly data for the preceding 24 hours.<br>0x00000000～0x3B9AC9FF<br>(0～999,999,999) | unsigned long × 48 | 192 bytes | $m^3$ | Get | | | |

Note: In the “Announcement at status change” column, ○ denotes mandatory processing when the property is implemented.

(1) Operation status (a property inherited from the device object super class)

This property indicates whether the functions specific to this class are operating (ON) or not (OFF). In the case of a node in which this class is implemented and the functions specific to this class start operating upon startup of the node, this property may be implemented with the value fixed at 0x30 (operation status ON).

(2) Water flowmeter classification

This property indicates the type of the flowing water being metered in the form of meter classification.

(3) Owner classification

This property indicates the owner of the water flowmeter in the form of owner classification.



© 2000 - 2023 ECHONET Consortium

(4) Measured cumulative amount of flowing water

This property indicates the measured cumulative amount of flowing water using a 9-digit decimal notation number. The unit is indicated by the "Unit for measured cumulative amount of flowing water" property (EPC = 0xE1). When the value of the "Unit for measured cumulative amounts of flowing water" property (which indicates the multiplying factor for measured cumulative amounts of flowing water) is 0x00, 0x01, 0x02, 0x03, 0x04, 0x05 or 0x06, the unit shall be 1m$^3$, 0.1m$^3$, 0.01 m$^3$, 0.001 m$^3$, 0.0001 m$^3$, 0.00001 m$^3$ or 0.000001 m$^3$, respectively. The property value range is from 0x00000000 to 3B9AC9FF (from 0 to 99,999,999). In the event of a measured cumulative flowing water amount overflow, the counting of the measured cumulative amount of flowing water shall be restarted from 0x00000000.

Example:

If the value of the "Measured cumulative amount of flowing water" property indicates that the measured cumulative amount of flowing water is 123456789 and the value of the "Unit for measured cumulative amount of flowing water" property is 0x04, the actual measured cumulative amount would be:

123456789 × 0.0001m$^3$=12345.6789m$^3$ (actual measured cumulative amount)

(5) Unit for measured cumulative amounts of flowing water

This property indicates the unit for measured cumulative amounts of flowing water.

| Property value | Multiplying factor for measured cumulative amounts of flowing water |
|---|---|
| 0x00 | 1 m$^3$ |
| 0x01 | 0.1 m$^3$ |
| 0x02 | 0.01 m$^3$ |
| 0x03 | 0.001 m$^3$ |
| 0x04 | 0.0001 m$^3$ |
| 0x05 | 0.00001 m$^3$ |
| 0x06 | 0.000001 m$^3$ |

(6) Historical data of measured cumulative amounts of flowing water

This property indicates the historical data of measured cumulative amounts of flowing water (unit = 0.001m$^3$), which consists of 48 pieces of half-hourly data for the preceding 24 hours. The half-hourly cumulative flowing water amount measurements shall be measurements that have been taken, in increments of 0.001 m$^3$, every hour and every half-hour by reference to the time indicated by the "Current time setting" property (EPC = 0x97). The measurements shall be stored in the order they have been taken, with the oldest and newest measurements stored in the highest-order



© 2000 - 2023 ECHONET Consortium

and lowest-order bytes, respectively. The property value range is from 0x00000000 to 0x3B9AC9FF (from 0 to 999,999.999m$^3$). For non-measured time data in the historical data, 0xFFFFFFFE shall be set.

(7) Detection of abnormal value in metering data

This property indicates whether the meter has detected an abnormal value in the metering data. The property value shall be 0x41 when an abnormal value has been detected and 0x42 when no abnormal value has been detected.

(8) Security data information

Provides security information about the abnormal states detected by the meter in the form of security data that identifies the abnormal states by means of bit assignment.

(9) ID number setting

This property indicates the ID number of the meter. The ID number shall be a 6-digit code comprised of 6 one-byte alphanumeric characters.

ID numbers are used when there are two or more meters.

(10) Verification expiration information

If the meter is one that has been verified by a verification body, this property indicates the month and year in which the verification of the meter will expire.

(11) Historical data of measured cumulative amounts of flowing water 2

This property indicates the historical data of measured cumulative amounts of flowing water, which consists of 48 pieces of half-hourly data for the preceding 24 hours. The half-hourly cumulative flowing water amount measurements shall be measurements that have been taken every hour and every half-hour by reference to the time indicated by the “Current time setting” property (EPC = 0x97). The measurements shall be stored in the order they have been taken, with the oldest and newest measurements stored in the highest-order and lowest-order bytes, respectively. The unit for the values shall be indicated by the unit for measured cumulative amounts of flowing water property (EPC = 0xE1). The value range is from 0x00000000 to 0x3B9AC9FF (from 0 to 999,999.999). For non-measured time data in the historical data, 0xFFFFFFFE shall be set.



© 2000 - 2023 ECHONET Consortium

## 3．3．22 Requirements for gas meter class

Class group code : 0x02

Class code : 0x82

Instance code : 0x01–0x7F (0x00: All-instance specification code)

| Property name | EPC | Contents of property | Data type | Data size | Unit | Access rule | Man-datory | Announce-ment at status change | Remark |
|---|---|---|---|---|---|---|---|---|---|
| | | Value range (decimal notation) | | | | | | | |
| Operation status | 0x80 | This property indicates the ON/OFF status. | unsigned char | 1 byte | — | Set | | ○ | |
| | | ON=0x30, OFF=0x31 | | | | Get | ○ | | |
| Cumulative amount of gas consumption measurement value | 0xE0 | This property indicates cumulative amount of gas consumption in units of 0.001 m3. | unsigned long | 4 bytes | 0.001m$^3$ | Get | ○ | | |
| | | 0x00000000–0x3B9AC9FF (0–999999,999m$^3$) | | | | | | | |
| Cumulative amount of gas consumption measurement log | 0xE2 | This property indicates cumulative amount of gas consumption measurement result log for past 24 hours as data in 30-minute segments. | unsigned long × 48 | 192 bytes | 0.001m$^3$ | Get | | | |
| | | 0x00000000–0x3B9AC9FF (0–999999,999m$^3$) | | | | | | | |

Note: In the “Announcement at status change” column, ○ denotes mandatory processing when the property is implemented.

(1) Operation status (inherited from the device object super class property)

This property indicates whether the function native to this class is operating or not (ON/OFF). In the node mounting this class, if the function of this class is started concurrently with the start of node operation, this property may be implemented at a fixed value of 0x30 (Operation status ON).

(2) Cumulative amount of gas consumption measurement value

This property indicates the cumulative amount of gas consumption in units of 0.001 m$^3$. The property value range shall be 0x00000000 to 0x3B9AC9FF (0 to 999,999,999 m$^3$). When the cumulative amount of gas consumption value overflows, the property shall be incremented again from 0x00000000.

(3) Cumulative amount of gas consumption measurement log

This property indicates the Cumulative amount of gas consumption (EPC = 0xE0) measurement result log for the past 24 hours as the data in 30-minute segments. The measured value of cumulative amount of gas consumption for each 30 minutes shall be based on the time to be set in the property name “Current time setting” (EPC-0x97). The measured value in units of 0.1 m$^3$ at every 0 minutes and 30 minutes shall be the data of 0x00000000 to 0x3B9AC9FF (0 to



© 2000 - 2023 ECHONET Consortium

999,999,999 $m^3$). The property value shall begin with the high-order byte in time series. For non-measured time data in the historical data, 0xFFFFFFFE shall be set.



© 2000 - 2023 ECHONET Consortium

# 3. 3. 23 Requirements for LP gas meter class

Class group code : 0x02

Class code : 0x83

Instance code : 0x01–0x7F (0x00: All-instance specification code)

| Property name | EPC | Contents of property | Data type | Data size | Unit | Access rule | Man-datory | Announce-ment at status change | Rema rk |
|---|---|---|---|---|---|---|---|---|---|
| | | Value range (decimal notation) | | | | | | | |
| Operation status | 0x80 | This property indicates the ON/OFF status. | unsigned char | 1 byte | – | Set | | ○ | |
| | | ON=0x30, OFF=0x31 | | | | Get | ○ | | |
| Cumulative amount of gas consumption of metering data 1 | 0xE0 | This property indicates cumulative amount of gas consumption in units of 0.0001 $m^3$. | unsigned long | 4 bytes | 0.0001 $m^3$ | Get | ○ | | |
| | | 0–0x005F5E0FF (0–9999,9999 $m^3$) | | | | | | | |
| Cumulative amount of gas consumption of metering data 2 | 0xE1 | This property indicates cumulative amount of gas consumption in units of 0.001 $m^3$. | unsigned long | 4 bytes | 0.001 $m^3$ | Get | ○ | | |
| | | 0–0x005F5E0FF (0–99999,999 $m^3$) | | | | | | | |
| Error detection status of metering data | 0xE2 | This property indicates status where meter detected metering data error. | unsigned char | 1 byte | – | Get | | ○ | |
| | | Error detection status found = 0x41<br>Error detection status not found = 0x42 | | | | | | | |
| Security data 1 | 0xE3 | This property indicates security data to define security information on meter operation by bit allocation. | unsigned long | 4 bytes | – | Get | | | |
| | | 0–0xFFFFFFFF | | | | | | | |
| Security data 2 | 0xE4 | This property indicates security data to define security information on meter operation by bit allocation. | unsigned long | 4 bytes | – | Get | | | |
| | | 0–0xFFFFFFFF | | | | | | | |
| Center valve shut-off status | 0xE5 | This property indicates status where gas shut-off valve of meter has been shut off by center. | unsigned char | 1 byte | – | Get | | ○ | |
| | | Center valve shut-off status found = 0x41<br>Center valve shut-off status not found = 0x42 | | | | | | | |
| Center valve shut-off recovery permission setting status | 0xE6 | This property indicates status where gas shut-off valve of meter has been shut off by center. | unsigned char | 1 byte | – | Get | | | |
| | | Center valve shut-off reset enable = 0x41<br>Center valve shut-off reset not enable = 0x42 | | | | | | | |
| Emergency valve shut-off status | 0xE7 | This property indicates status where gas shut-off valve of meter has been shut off. | unsigned char | 1 byte | – | Get | | | |
| | | Emergency valve shut-off status found = 0x41<br>Emergency valve shut-off status not found = 0x42 | | | | | | | |
| Shut-off valve open/close status | 0xE8 | This property indicates open/close status of shut-off valve. | unsigned char | 1 byte | – | Get | | | |
| | | Shut-off valve open status = 0x41<br>Shut-off valve close status = 0x42 | | | | | | | |



© 2000 - 2023 ECHONET Consortium

| | | | | | | | | | |
|---|---|---|---|---|---|---|---|---|---|
| Residual volume control warning | 0xE9 | This property indicates status as warning where residual volume is very small.<br>Residual volume control warning level 1 0x31<br>Residual volume control warning level 2 0x32<br>Residual volume control warning level 3 0x33<br>No residual volume control warning 0x42 | unsigned char | 1 byte | – | Get | | ○ | |
| Set value of residual volume control warning level 1 | 0xEA | Sets “Small residual volume detection level 1”.<br>0–0xFFFFFF (0–16,777,215) | unsigned char × 3 | 3 bytes | liter | Set/Get | | | |
| Set value of residual volume control warning level 2 | 0xEB | Sets “Small residual volume detection level 2”.<br>0–0xFFFFFF (0–16,777,215) | unsigned char × 3 | 3 bytes | liter | Set/Get | | | |
| Set value of residual volume control warning level 3 | 0xEC | Sets “Small residual volume detection level 3”.<br>0–0xFFFFFF (0–16,777,215) | unsigned char × 3 | 3 bytes | liter | Set/Get | | | |
| Slight leak timer value (gas flow rate continuation) | 0xED | This property indicates number of days on which gas flow rate is continued.<br>0–0xFD (0–253)<br>(0 to 253 days) | unsigned char | 1 byte | Day | Get | | | |
| Slight leak timer value (without pressure increase) | 0xEE | This property indicates number of days on which gas leak monitoring is performed without gas pressure increase.<br>0–0xFD (0–253)<br>(0 to 253 days) | unsigned char | 1 byte | Day | Get | | | |
| Shut-off reason log | 0xEF | Defines log of reasons for gas shut-off by shut-off valve in 1 byte each with bits assigned. Shows the last three logs.<br>Log 3: log 2: log 1<br>0xFF: 0xFF: 0xFF | unsigned char × 3 | 3 bytes | – | Get | | | |
| Maximum value of supply pressure data | 0xD0 | This property indicates maximum value of supply pressure data in units of 0.01 kPa.<br>0x0000–0xFFFD (0–655.33)<br>(0–655.33 kPa) | unsigned short | 2 bytes | 0.01 kPa | Get | | | |
| Minimum value of supply pressure data | 0xD1 | This property indicates minimum value of supply pressure data in units of 0.01 kPa.<br>0x0000–0xFFFD (0–655.33)<br>(0–655.33 kPa) | unsigned short | 2 bytes | 0.01 kPa | Get | | | |
| Current value of supply pressure data | 0xD2 | This property indicates current value of supply pressure data in units of 0.01 kPa.<br>0x0000–0xFFFD (0–655.33)<br>(0–655.33 kPa) | unsigned short | 2 bytes | 0.01 kPa | Get | | | |
| Maximum value of block pressure data | 0xD3 | This property indicates maximum value of block pressure data in units of 0.01 kPa.<br>0x0000–0xFFFD (0–655.33)<br>(0–655.33 kPa) | unsigned short | 2 bytes | 0.01 kPa | Get | | | |
| Minimum value of block pressure data | 0xD4 | This property indicates minimum value of block pressure data in units of 0.01 kPa.<br>0x0000–0xFFFD (0–655.33)<br>(0–655.33 kPa) | unsigned short | 2 bytes | 0.01 kPa | Get | | | |
| Current value of block pressure data | 0xD5 | This property indicates current value of block pressure data in units of 0.01 kPa.<br>0x0000–0xFFFD (0–655.33)<br>(0–655.33 kPa) | unsigned short | 2 bytes | 0.01 kPa | Get | | | |



© 2000 - 2023 ECHONET Consortium

| | | | | | | | | | |
|---|---|---|---|---|---|---|---|---|---|
| Number of block pressure/supply pressure error days: times | 0xD6 | This property indicates number of days on which block pressure/supply pressure errors occurred in 1 byte each.<br>Number of block pressure error days: Number of supply pressure error days: Number of block pressure error times: Number of supply pressure error times | unsigned char × 4 | 4 bytes | – | Get | | | |
| Test call setting | 0xD7 | Performs test call operation setup.<br>Test call operation ON 0x41<br>Test call operation OFF 0x42 | unsigned char | 1 byte | – | Set/Get | | | |

Note: In the “Announcement at status change” column, ○ denotes mandatory processing when the property is implemented.

(1) Operation status (inherited from the device object super class property)

This property indicates whether the LP gas meter is operating or not (ON/OFF). In the node mounting this class, if the function of the LP gas meter is started concurrently with the start of node operation, this property may be implemented at a fixed value of 0x30 (Operation status ON).

(2) Cumulative amount of gas consumption of metering data 1

This property indicates the cumulative amount of gas consumption in units of 0.0001 $m^3$. The property value range shall be 0x00000000 to 0x005F5E0FF (0 to 9999,9999 $m^3$). When the cumulative amount of gas consumption overflows, the property value shall be incremented again from 0x00000000. Either “Cumulative amount of gas consumption of metering data 1” (EPC = 0xE0) or “Cumulative amount of gas consumption of metering data 2” (EPC = 0xE1) must be implemented.

(3) Cumulative amount of gas consumption of metering data 2

This property indicates the cumulative amount of gas consumption in units of 0.001 $m^3$. The property value range shall be 0x00000000 to 0x005F5E0FF (0 to 99999,999 $m^3$). When the cumulative amount of gas consumption overflows, the property value shall be incremented again from 0x00000000. Either “Cumulative amount of gas consumption of metering data 1” (EPC = 0xE0) or “Cumulative amount of gas consumption of metering data 2” (EPC = 0xE1) must be implemented.

(4) Error detection status of metering data

This property indicates that a metering data error was detected. The property shall be 0x41 for “Error detection status found” and 0x42 for “Error detection status not found”.

(5) Security data 1

This property indicates the security data to define the security information on meter error detection by bit allocation.



© 2000 - 2023 ECHONET Consortium

(6) Security data 2

This property indicates the security data to define the security information on meter error detection by bit allocation.

(7) Center valve shut-off status

This property indicates a status where the gas shut-off valve of the meter is shut off by the center. In the status of “Center valve shut-off request found”, no request for opening the shut-off valve will be accepted until a reset permission is given from the center.

(8) Center valve shut-off recovery permission setting status

Specifies whether or not to enable the function for recovering from the shut-off state of the meter's gas shut-off valve. The value for enabling the center valve shut-off recovery function shall be 0x41. The value for disabling the center valve shut-off recovery function shall be 0x40.

(9) Emergency valve shut-off status

This property indicates that the meter's gas shut-off valve is closed because of an emergency. The value 0x41 shall indicate that the emergency valve shut-off status is found. The value 0x42 shall indicate that the emergency valve shut-off status is not found.

(10) Shut-off valve open/close status

This property indicates whether the shut-off valve is open or closed. The value 0x41 shall indicate that the shut-off valve is open. The value 0x42 shall indicate that the shut-off valve is closed.

(11) Residual volume control warning

Issues a warning to indicate that the residual volume is very small. The value 0x31 indicates residual volume control warning level 1. The value 0x32 indicates residual volume control warning level 2. The value 0x33 indicates residual volume control warning level 3. The value 0x42 indicates that no residual volume control warning is issued. When the residual volume decreases below a residual volume control warning level setting (the property value for the set value of residual volume control warning level 1, set value of residual volume control warning level 2, or set value of residual volume control warning level 3), the associated property value shall be taken as stated above. The residual volumes indicated by the three warning levels shall be, in decreasing order, the set value of residual volume control warning level 1, set value of residual volume control warning level 2, and set value of residual volume control warning level 3.

(12) Set value of residual volume control warning level 1



© 2000 - 2023 ECHONET Consortium

Sets the residual gas volume that changes the value of the residual volume control warning property (0xE9) to residual volume control warning level 1 (0x31). The property value range shall be 0 to 0xFFFFFF (0 to 16,777,215 liters).

(13) Set value of residual volume control warning level 2

Sets the residual gas volume that changes the value of the residual volume control warning property (0xE9) to residual volume control warning level 2 (0x32). The property value range shall be 0 to 0xFFFFFF (0 to 16,777,215 liters).

(14) Set value of residual volume control warning level 3

Sets the residual gas volume that changes the value of the residual volume control warning property (0xE9) to residual volume control warning level 3 (0x33). The property value range shall be 0 to 0xFFFFFF (0 to 16,777,215 liters).

(15) Slight leak timer value (gas flow rate continuation)

This property indicates the number of days for which gas has flowed continuously. The property value range shall be 0 to 0xFD (0 to 253 days).

(16) Slight leak timer value (without pressure increase)

This property indicates the number of days for which gas leak monitoring has been conducted with no gas pressure increase detected. The property value range shall be 0 to 0xFD (0 to 253 days).

(17) Shut-off reason log

Defines the log of reasons for gas shut-off by the shut-off valve in 1 byte each, with assigned bits. Shows the last three logs. The property value shall be structured so as to sequentially indicate Log 3, Log 2, and Log 1, beginning with the high-order byte. Log 1 shall be the last log. Log 2 shall be the log obtained immediately before Log 1. Log 3 shall be the log obtained immediately before Log 2.

(18) Maximum value of supply pressure data

This property indicates the maximum value of supply pressure data in units of 0.01 kPa. The property value range shall be 0x0000 to 0xFFFD (0 to 655.33 kPa).

(19) Minimum value of supply pressure data

This property indicates the minimum value of supply pressure data in units of 0.01 kPa. The property value range shall be 0x0000 to 0xFFFD (0 to 655.33 kPa).

(20) Current value of supply pressure data



© 2000 - 2023 ECHONET Consortium

This property indicates the current value of supply pressure data in units of 0.01 kPa. The property value range shall be 0x0000 to 0xFFFD (0 to 655.33 kPa).

(21) Maximum value of block pressure data

This property indicates the maximum value of block pressure data in units of 0.01 kPa. The property value range shall be 0x0000 to 0xFFFD (0 to 655.33 kPa).

(22) Minimum value of block pressure data

This property indicates the minimum value of block pressure data in units of 0.01 kPa. The property value range shall be 0x0000 to 0xFFFD (0 to 655.33 kPa).

(23) Current value of block pressure data

This property indicates the current value of block pressure data in units of 0.01 kPa. The property value range shall be 0x0000 to 0xFFFD (0 to 655.33 kPa).

(24) Number of block pressure/supply pressure error days

This property indicates the number of days on which a block pressure/supply pressure error occurred and the number of such error occurrences. One byte each is used for the number of error days and the number of error occurrences. The property value shall be structured so as to sequentially indicate the number of block pressure error days, the number of supply pressure error days, the number of block pressure error occurrences, and the number of supply pressure error occurrences, beginning with the high-order byte.

(25) Test call setting

Performs test call operation setup. When “Test call operation ON” (0x41) is set for this property, a test call is originated; however, if “Test call operation OFF” (0x42) is set, the test call stops.



© 2000 - 2023 ECHONET Consortium

# 3．3．24 Requirements for power distribution board metering class

Class group code : 0x02

Class code : 0x87

Instance code : 0x01–0x7F (0x00: All-instance specification code)

| Property name | EPC | Contents of property<br>Value range (decimal notation) | Data type | Data size | Unit | Access rule | Mandatory | Announcement at status change | Remark |
|---|---|---|---|---|---|---|---|---|---|
| Operation status | 0x80 | This property indicates the ON/OFF status.<br>ON = 0x30, OFF = 0x31 | unsigned char | 1 byte | — | Set<br>Get | <br>○ | ○ | |
| Measured cumulative amount of electric energy (normal direction) | 0xC0 | This property indicates the measured cumulative amount of electric energy using an 8-digit decimal notation number.<br>0x00000000–0x05F5E0FF<br>(0–99,999,999) | unsigned long | 4 bytes | kWh | Get | ○ | | |
| Measured cumulative amount of electric energy (reverse direction) | 0xC1 | This property indicates the measured cumulative amount of electric energy using an 8-digit decimal notation number.<br>0x00000000–0x05F5E0FF<br>(0–99,999,999) | unsigned long | 4 bytes | kWh | Get | ○ | | |
| Unit for cumulative amount of electric energy | 0xC2 | This property indicates the unit (multiplying factor) used for the measured cumulative amount of electric energy and the historical data of measured cumulative amount of electric energy.<br>0x00: 1 kWh<br>0x01: 0.1 kWh<br>0x02: 0.01 kWh<br>0x03: 0.001 kWh (Initial value)<br>0x04: 0.0001 kWh<br>0x0A: 10 kWh<br>0x0B: 100 kWh<br>0x0C: 1000 kWh<br>0x0D: 10000 kWh | unsigned char | 1 byte | — | Get | ○ | | |
| Historical data of measured cumulative amount of electric energy (normal direction) | 0xC3 | This property indicates the day for which the historical data of measured cumulative amount of electric energy is to be retrieved and the historical data of measured cumulative amount of electric energy (8 digits), which consists of 48 pieces of half-hourly data for the preceding 24 hours.<br>0x0000–0x0063 :<br>0x00000000–0x05F5E0FF<br>(0–99) : (0–99,999,999) | unsigned short + unsigned long × 48 | 194 bytes | kWh | Get | | | |
| Historical data of measured cumulative amount of electric energy (reverse | 0xC4 | This property indicates the day for which the historical data of measured cumulative amount of electric energy is to be retrieved and the historical data of measured cumulative amount of electric energy (8 digits), which consists of 48 pieces of half-hourly data for the preceding 24 hours. | unsigned short + unsigned long | 194 bytes | kWh | Get | | | |



© 2000 - 2023 ECHONET Consortium

| | | | | | | | | | |
|---|---|---|---|---|---|---|---|---|---|
| direction) | | 0x0000–0x0063 :<br>0x00000000–0x05F5E0FF<br>(0–99) : (0–99,999,999) | × 48 | | | | | | |
| Day for which the historical data of measured cumulative amount of electric energy is to be retrieved | 0xC5 | This property indicates the day for which the historical data of measured cumulative amount of electric energy (which consists of 48 pieces of half-hourly data for the preceding 24 hours) is to be retrieved.<br>0x00–0x63<br>(0–99)<br>0: current day<br>1–99: previous day–day that precedes the current day by 99 days | unsigned char | 1 byte | | Set/ Get | | | |
| Measured instantaneous electric power | 0xC6 | This property indicates the measured effective instantaneous electric power in watts.<br>0x80000001–0x7FFFFFFD<br>(-2,147,483,647–2,147,483,645) | signed long | 4 bytes | W | Get | | | |
| Measured instantaneous currents | 0xC7 | This property indicates the measured effective instantaneous R and T phase currents in amperes.<br>In the case of a single-phase, two-wire system, 0x7FFE shall be used for the T phase.<br>0x8001-0x7FFD (R phase)<br>: 0x8001-0x7FFD (T phase)<br>(-3,276.7–3,276.5):<br>(-3,276.7–3,276.5) | signed short × 2 | 4 bytes | 0.1 A | Get | | | |
| Measured instantaneous currents | 0xC8 | This property indicates the measured effective instantaneous R-S(N) and S(N)-T voltages in volts. In the case of a single-phase, two-wire system, 0xFFFE shall be used for the S(N)-T voltage.<br>0x0000–0xFFFD (between R and S(N)) :<br>0x0000–0xFFFD (between S(N) and T)<br>(0–6,553.3) : (0–6,553.3) | unsigned short × 2 | 4 bytes | 0.1 V | Get | | | |
| Measurement channel 1 | 0xD0 | This property indicates the measurement data for Measurement channel 1 (cumulative amount of electric energy (kWh) and effective instantaneous R and T phase currents (amperes)).<br>Data format for the electric energy: same as 0xC0<br>Unit: same as 0xC2<br>Data format for the currents: same as 0xC7 | unsigned long + signed short × 2 | 8 bytes | kWh + 0.1 A × 2 | Get | | | |
| Measurement channel 2 | 0xD1 | This property indicates the measurement data for Measurement channel 2 (cumulative amount of electric energy (kWh) and effective instantaneous R and T phase currents (amperes)).<br>Data format for the electric energy: same as 0xC0<br>Unit: same as 0xC2<br>Data format for the currents: same as 0xC7 | unsigned long + signed short × 2 | 8 bytes | kWh + 0.1 A × 2 | Get | | | |



© 2000 - 2023 ECHONET Consortium

| | | | | | | | | | |
|---|---|---|---|---|---|---|---|---|---|
| Measurement channel 3 | 0xD2 | This property indicates the measurement data for Measurement channel 3 (cumulative amount of electric energy (kWh) and effective instantaneous R and T phase currents (amperes)).<br>Data format for the electric energy: same as 0xC0<br>Unit: same as 0xC2<br>Data format for the currents: same as 0xC7 | unsigned long + signed short × 2 | 8 bytes | kWh + 0.1 A × 2 | Get | | | |
| Measurement channel 4 | 0xD3 | This property indicates the measurement data for Measurement channel 4 (cumulative amount of electric energy (kWh) and effective instantaneous R and T phase currents (amperes)).<br>Data format for the electric energy: same as 0xC0<br>Unit: same as 0xC2<br>Data format for the currents: same as 0xC7 | unsigned long + signed short × 2 | 8 bytes | kWh + 0.1 A × 2 | Get | | | |
| Measurement channel 5 | 0xD4 | This property indicates the measurement data for Measurement channel 5 (cumulative amount of electric energy (kWh) and effective instantaneous R and T phase currents (amperes)).<br>Data format for the electric energy: same as 0xC0<br>Unit: same as 0xC2<br>Data format for the currents: same as 0xC7 | unsigned long + signed short × 2 | 8 bytes | kWh + 0.1 A × 2 | Get | | | |
| Measurement channel 6 | 0xD5 | This property indicates the measurement data for Measurement channel 6 (cumulative amount of electric energy (kWh) and effective instantaneous R and T phase currents (amperes)).<br>Data format for the electric energy: same as 0xC0<br>Unit: same as 0xC2<br>Data format for the currents: same as 0xC7 | unsigned long + signed short × 2 | 8 bytes | kWh + 0.1 A × 2 | Get | | | |
| Measurement channel 7 | 0xD6 | This property indicates the measurement data for Measurement channel 7 (cumulative amount of electric energy (kWh) and effective instantaneous R and T phase currents (amperes)).<br>Data format for the electric energy: same as 0xC0<br>Unit: same as 0xC2<br>Data format for the currents: same as 0xC7 | unsigned long + signed short × 2 | 8 bytes | kWh + 0.1 A × 2 | Get | | | |
| Measurement channel 8 | 0xD7 | This property indicates the measurement data for Measurement channel 8 (cumulative amount of electric energy (kWh) and effective instantaneous R and T phase currents (amperes)).<br>Data format for the electric energy: same as 0xC0<br>Unit: same as 0xC2<br>Data format for the currents: same as 0xC7 | unsigned long + signed short × 2 | 8 bytes | kWh + 0.1 A × 2 | Get | | | |
| Measurement channel 9 | 0xD8 | This property indicates the measurement data for Measurement channel 9 (cumulative amount of electric energy (kWh) and effective instantaneous R and T phase currents (amperes)). | unsigned long + signed | 8 bytes | kWh + 0.1 A | Get | | | |



© 2000 - 2023 ECHONET Consortium

| | | | | | | | | | |
|---|---|---|---|---|---|---|---|---|---|
| | | Data format for the electric energy: same as 0xC0<br>Unit: same as 0xC2<br>Data format for the currents: same as 0xC7 | short<br>× 2 | | × 2 | | | | |
| Measurement channel 10 | 0xD9 | This property indicates the measurement data for Measurement channel 10 (cumulative amount of electric energy (kWh) and effective instantaneous R and T phase currents (amperes)).<br>Data format for the electric energy: same as 0xC0<br>Unit: same as 0xC2<br>Data format for the currents: same as 0xC7 | unsigned long<br>+<br>signed short<br>× 2 | 8 bytes | kWh<br>+<br>0.1 A<br>× 2 | Get | | | |
| Measurement channel 11 | 0xDA | This property indicates the measurement data for Measurement channel 11 (cumulative amount of electric energy (kWh) and effective instantaneous R and T phase currents (amperes)).<br>Data format for the electric energy: same as 0xC0<br>Unit: same as 0xC2<br>Data format for the currents: same as 0xC7 | unsigned long<br>+<br>signed short<br>× 2 | 8 bytes | kWh<br>+<br>0.1 A<br>× 2 | Get | | | |
| Measurement channel 12 | 0xDB | This property indicates the measurement data for Measurement channel 12 (cumulative amount of electric energy (kWh) and effective instantaneous R and T phase currents (amperes)).<br>Data format for the electric energy: same as 0xC0<br>Unit: same as 0xC2<br>Data format for the currents: same as 0xC7 | unsigned long<br>+<br>signed short<br>× 2 | 8 bytes | kWh<br>+<br>0.1 A<br>× 2 | Get | | | |
| Measurement channel 13 | 0xDC | This property indicates the measurement data for Measurement channel 13 (cumulative amount of electric energy (kWh) and effective instantaneous R and T phase currents (amperes)).<br>Data format for the electric energy: same as 0xC0<br>Unit: same as 0xC2<br>Data format for the currents: same as 0xC7 | unsigned long<br>+<br>signed short<br>× 2 | 8 bytes | kWh<br>+<br>0.1 A<br>× 2 | Get | | | |
| Measurement channel 14 | 0xDD | This property indicates the measurement data for Measurement channel 14 (cumulative amount of electric energy (kWh) and effective instantaneous R and T phase currents (amperes)).<br>Data format for the electric energy: same as 0xC0<br>Unit: same as 0xC2<br>Data format for the currents: same as 0xC7 | unsigned long<br>+<br>signed short<br>× 2 | 8 bytes | kWh<br>+<br>0.1 A<br>× 2 | Get | | | |
| Measurement channel 15 | 0xDE | This property indicates the measurement data for Measurement channel 15 (cumulative amount of electric energy (kWh) and effective instantaneous R and T phase currents (amperes)).<br>Data format for the electric energy: same as 0xC0<br>Unit: same as 0xC2<br>Data format for the currents: same as 0xC7 | unsigned long<br>+<br>signed short<br>× 2 | 8 bytes | kWh<br>+<br>0.1 A<br>× 2 | Get | | | |



© 2000 - 2023 ECHONET Consortium

| | | | | | | | | | |
|---|---|---|---|---|---|---|---|---|---|
| Measurement channel 16 | 0xDF | This property indicates the measurement data for Measurement channel 16 (cumulative amount of electric energy (kWh) and effective instantaneous R and T phase currents (amperes)).<br>Data format for the electric energy: same as 0xC0<br>Unit: same as 0xC2<br>Data format for the currents: same as 0xC7 | unsigned long + signed short × 2 | 8 bytes | kWh + 0.1 A × 2 | Get | | | |
| Measurement channel 17 | 0xE0 | This property indicates the measurement data for Measurement channel 17 (cumulative amount of electric energy (kWh) and effective instantaneous R and T phase currents (amperes)).<br>Data format for the electric energy: same as 0xC0<br>Unit: same as 0xC2<br>Data format for the currents: same as 0xC7 | unsigned long + signed short × 2 | 8 bytes | kWh + 0.1 A × 2 | Get | | | |
| Measurement channel 18 | 0xE1 | This property indicates the measurement data for Measurement channel 18 (cumulative amount of electric energy (kWh) and effective instantaneous R and T phase currents (amperes)).<br>Data format for the electric energy: same as 0xC0<br>Unit: same as 0xC2<br>Data format for the currents: same as 0xC7 | unsigned long + signed short × 2 | 8 bytes | kWh + 0.1 A × 2 | Get | | | |
| Measurement channel 19 | 0xE2 | This property indicates the measurement data for Measurement channel 19 (cumulative amount of electric energy (kWh) and effective instantaneous R and T phase currents (amperes)).<br>Data format for the electric energy: same as 0xC0<br>Unit: same as 0xC2<br>Data format for the currents: same as 0xC7 | unsigned long + signed short × 2 | 8 bytes | kWh + 0.1 A × 2 | Get | | | |
| Measurement channel 20 | 0xE3 | This property indicates the measurement data for Measurement channel 20 (cumulative amount of electric energy (kWh) and effective instantaneous R and T phase currents (amperes)).<br>Data format for the electric energy: same as 0xC0<br>Unit: same as 0xC2<br>Data format for the currents: same as 0xC7 | unsigned long + signed short × 2 | 8 bytes | kWh + 0.1 A × 2 | Get | | | |
| Measurement channel 21 | 0xE4 | This property indicates the measurement data for Measurement channel 21 (cumulative amount of electric energy (kWh) and effective instantaneous R and T phase currents (amperes)).<br>Data format for the electric energy: same as 0xC0<br>Unit: same as 0xC2<br>Data format for the currents: same as 0xC7 | unsigned long + signed short × 2 | 8 bytes | kWh + 0.1 A × 2 | Get | | | |
| Measurement channel 22 | 0xE5 | This property indicates the measurement data for Measurement channel 22 (cumulative amount of electric energy (kWh) and effective instantaneous R and T phase currents (amperes)). | unsigned long + signed | 8 bytes | kWh + 0.1 A | Get | | | |



© 2000 - 2023 ECHONET Consortium

| | | | | | | | | | |
|---|---|---|---|---|---|---|---|---|---|
| | | Data format for the electric energy: same as 0xC0<br>Unit: same as 0xC2<br>Data format for the currents: same as 0xC7 | short<br>× 2 | | × 2 | | | | |
| Measurement channel 23 | 0xE6 | This property indicates the measurement data for Measurement channel 23 (cumulative amount of electric energy (kWh) and effective instantaneous R and T phase currents (amperes)).<br>Data format for the electric energy: same as 0xC0<br>Unit: same as 0xC2<br>Data format for the currents: same as 0xC7 | unsigned long<br>+<br>signed short<br>× 2 | 8 bytes | kWh<br>+<br>0.1 A<br>× 2 | Get | | | |
| Measurement channel 24 | 0xE7 | This property indicates the measurement data for Measurement channel 24 (cumulative amount of electric energy (kWh) and effective instantaneous R and T phase currents (amperes)).<br>Data format for the electric energy: same as 0xC0<br>Unit: same as 0xC2<br>Data format for the currents: same as 0xC7 | unsigned long<br>+<br>signed short<br>× 2 | 8 bytes | kWh<br>+<br>0.1 A<br>× 2 | Get | | | |
| Measurement channel 25 | 0xE8 | This property indicates the measurement data for Measurement channel 25 (cumulative amount of electric energy (kWh) and effective instantaneous R and T phase currents (amperes)).<br>Data format for the electric energy: same as 0xC0<br>Unit: same as 0xC2<br>Data format for the currents: same as 0xC7 | unsigned long<br>+<br>signed short<br>× 2 | 8 bytes | kWh<br>+<br>0.1 A<br>× 2 | Get | | | |
| Measurement channel 26 | 0xE9 | This property indicates the measurement data for Measurement channel 26 (cumulative amount of electric energy (kWh) and effective instantaneous R and T phase currents (amperes)).<br>Data format for the electric energy: same as 0xC0<br>Unit: same as 0xC2<br>Data format for the currents: same as 0xC7 | unsigned long<br>+<br>signed short<br>× 2 | 8 bytes | kWh<br>+<br>0.1 A<br>× 2 | Get | | | |
| Measurement channel 27 | 0xEA | This property indicates the measurement data for Measurement channel 27 (cumulative amount of electric energy (kWh) and effective instantaneous R and T phase currents (amperes)).<br>Data format for the electric energy: same as 0xC0<br>Unit: same as 0xC2<br>Data format for the currents: same as 0xC7 | unsigned long<br>+<br>signed short<br>× 2 | 8 bytes | kWh<br>+<br>0.1 A<br>× 2 | Get | | | |
| Measurement channel 28 | 0xEB | This property indicates the measurement data for Measurement channel 28 (cumulative amount of electric energy (kWh) and effective instantaneous R and T phase currents (amperes)).<br>Data format for the electric energy: same as 0xC0<br>Unit: same as 0xC2<br>Data format for the currents: same as 0xC7 | unsigned long<br>+<br>signed short<br>× 2 | 8 bytes | kWh<br>+<br>0.1 A<br>× 2 | Get | | | |



© 2000 - 2023 ECHONET Consortium

| | | | | | | | | | |
|---|---|---|---|---|---|---|---|---|---|
| Measurement channel 29 | 0xEC | This property indicates the measurement data for Measurement channel 29 (cumulative amount of electric energy (kWh) and effective instantaneous R and T phase currents (amperes)).<br>Data format for the electric energy: same as 0xC0<br>Unit: same as 0xC2<br>Data format for the currents: same as 0xC7 | unsigned long + signed short × 2 | 8 bytes | kWh + 0.1 A × 2 | Get | | | |
| Measurement channel 30 | 0xED | This property indicates the measurement data for Measurement channel 30 (cumulative amount of electric energy (kWh) and effective instantaneous R and T phase currents (amperes)).<br>Data format for the electric energy: same as 0xC0<br>Unit: same as 0xC2<br>Data format for the currents: same as 0xC7 | unsigned long + signed short × 2 | 8 bytes | kWh + 0.1 A × 2 | Get | | | |
| Measurement channel 31 | 0xEE | This property indicates the measurement data for Measurement channel 31 (cumulative amount of electric energy (kWh) and effective instantaneous R and T phase currents (amperes)).<br>Data format for the electric energy: same as 0xC0<br>Unit: same as 0xC2<br>Data format for the currents: same as 0xC7 | unsigned long + signed short × 2 | 8 bytes | kWh + 0.1 A × 2 | Get | | | |
| Measurement channel 32 | 0xEF | This property indicates the measurement data for Measurement channel 32 (cumulative amount of electric energy (kWh) and effective instantaneous R and T phase currents (amperes)).<br>Data format for the electric energy: same as 0xC0<br>Unit: same as 0xC2<br>Data format for the currents: same as 0xC7 | unsigned long + signed short × 2 | 8 bytes | kWh + 0.1 A × 2 | Get | | | |
| Master rated capacity | 0xB0 | This property indicates the rated capacity of the master circuit.<br>0x00–0xFD | unsigned char | 1 byte | A | Get | | | |
| Number of measurement channels (simplex) | 0xB1 | This property indicates the number of simplex measurement channels.<br>0x01–0xFC (1–252)<br>0xFD: Unknown | unsigned char | 1 byte | — | Get | | | |
| Channel range specification for cumulative amount of electric energy consumption measurement (simplex) | 0xB2 | This property is used to specify the range of acquisition by the measured cumulative amount of electric energy consumption list (simplex).<br>1st byte: Acquisition start channel<br>0x01–0xFC (1–252)<br>2nd byte: Range from the acquisition start channel (0x01–0x3C: 1–60) | unsigned char × 2 | 2 bytes | — | Set/ Get | | | |
| Measured cumulative amount of electric energy consumption list (simplex) | 0xB3 | This property indicates the measured cumulative amount of electric energy consumptions of measurement channels specified by the property of “Channel range specification for cumulative amount of electric energy consumption measurement (simplex).” | unsigned char + unsigned char | (Max) 242 bytes | kWh | Get | | | |



© 2000 - 2023 ECHONET Consortium

| | | | | | | | | | |
|---|---|---|---|---|---|---|---|---|---|
| | | 1st byte: Acquisition start channel<br>0x01–0xFC (1–252)<br>2nd byte: Range from the acquisition start channel (0x01–0x3C: 1–60)<br>3rd byte and later:<br>Measured cumulative amount of electric energy consumption<br>0x00000000–0x05F5E0FF<br>(0–99,999,999)<br>The unit shall follow EPC = 0xC2. | +<br>(unsigned long)<br>(Max)<br>× 60) | | | | | | |
| Channel range specification for instantaneous current measurement (simplex) | 0xB4 | This property is used to specify the range of acquisition by the measured instantaneous current list (simplex).<br>1st byte: Acquisition start channel<br>0x01–0xFC (1–252)<br>2nd byte: Range from the acquisition start channel (0x01–0x3C: 1–60) | unsigned char<br>× 2 | 2<br>bytes | — | Set/<br>Get | | | |
| Measured instantaneous current list (simplex) | 0xB5 | This property indicates the measured instantaneous currents of measurement channels specified by the property of "Channel range specification for instantaneous current measurement (simplex)."<br>1st byte: Acquisition start channel<br>0x01–0xFC (1–252)<br>2nd byte: Range from the acquisition start channel (0x01–0x3C: 1–60)<br>3rd byte and later:<br>Measured instantaneous current<br>0x8001–0x7FFD (R phase):<br>0x8001–0x7FFD (T phase)<br>(-3,276.7–3,276.5):<br>(-3,276.7–3,276.5) | unsigned char<br>+<br>unsigned char<br>+<br>(signed short × 2<br>(Max)<br>× 60) | (Max)<br>242<br>bytes | 0.1<br>A | Get | | | |
| Channel range specification for instantaneous power consumption measurement (simplex) | 0xB6 | This property is used to specify the range of acquisition by the measured instantaneous power consumption list (simplex).<br>1st byte: Acquisition start channel<br>0x01–0xFC (1–252)<br>2nd byte: Range from the acquisition start channel (0x01–0x3C: 1–60) | unsigned char<br>× 2 | 2<br>bytes | — | Set/<br>Get | | | |
| Measured instantaneous power consumption list (simplex) | 0xB7 | This property indicates the measured instantaneous power consumptions of measurement channels specified by the property of "Channel range specification for instantaneous power consumption measurement (simplex)."<br>1st byte: Acquisition start channel<br>0x01–0xFC (1–252)<br>2nd byte: Range from the acquisition start channel (0x01–0x3C: 1–60)<br>3rd byte and later:<br>Measured instantaneous power consumption<br>0x80000001–0x7FFFFFFD<br>(-2,147,483,647–2,147,483,645) | unsigned char<br>+<br>unsigned char<br>+<br>(signed long<br>(Max)<br>× 60) | (Max)<br>242<br>bytes | W | Get | | | |
| Number of measurement | 0xB8 | This property indicates the number of duplex measurement channels. | unsigned | 1 | — | Get | | | |



© 2000 - 2023 ECHONET Consortium

| | | | | | | | | | |
|---|---|---|---|---|---|---|---|---|---|
| channels (duplex) | | 0x01–0xFC (1–252)<br>0xFD: Unknown | char | byte | | | | | |
| Channel range specification for cumulative amount of electric energy consumption measurement (duplex) | 0xB9 | This property is used to specify the range of acquisition by the measured cumulative amount of electric energy consumption list (duplex).<br>1st byte: Acquisition start channel<br>0x01–0xFC (1–252)<br>2nd byte: Range from the acquisition start channel (0x01–0x1E: 1–30) | unsigned char × 2 | 2 bytes | — | Set/ Get | | | |
| Measured cumulative amount of electric energy consumption list (duplex) | 0xBA | This property indicates the measured cumulative amount of electric energy consumptions of measurement channels specified by the property of "Channel range specification for cumulative amount of electric energy consumption measurement (duplex)."<br>1st byte: Acquisition start channel<br>0x01–0xFC (1–252)<br>2nd byte: Range from the acquisition start channel (0x01–0x1E: 1–30)<br>3rd byte and later:<br>Measured cumulative amount of electric energy consumption (forward direction)<br>0x00000000–0x05F5E0FF<br>(0–99,999,999)<br>Measured cumulative amount of electric energy consumption (reverse direction)<br>0x00000000–0x05F5E0FF<br>(0–99,999,999)<br>The unit shall follow EPC = 0xC2. | unsigned char + unsigned char + (unsigned long + unsigned long (Max) × 30) | (Max) 242 bytes | kWh | Get | | | |
| Channel range specification for instantaneous current measurement (duplex) | 0xBB | This property is used to specify the range of acquisition by the measured instantaneous current list (duplex).<br>1st byte: Acquisition start channel<br>0x01–0xFC (1–252)<br>2nd byte: Range from the acquisition start channel (0x01–0x3C: 1–60) | unsigned char × 2 | 2 bytes | — | Set/ Get | | | |
| Measured instantaneous current list (duplex) | 0xBC | This property indicates the measured instantaneous currents of measurement channels specified by the property of "Channel range specification for instantaneous current measurement (duplex)."<br>1st byte: Acquisition start channel<br>0x01–0xFC (1–252)<br>2nd byte: Range from the acquisition start channel (0x01–0x3C: 1–60)<br>3rd byte and later:<br>Measured instantaneous currents<br>0x8001–0x7FFD (R phase):<br>0x8001–0x7FFD (T phase)<br>(-3,276.7–3,276.5):<br>(-3,276.7– 3,276.5) | unsigned char + unsigned char + (signed short × 2 (Max) × 60) | (Max) 242 bytes | 0.1 A | Get | | | |
| Channel range specification for instantaneous | 0xBD | This property is used to specify the range of acquisition by the measured instantaneous power consumption list (duplex). | unsigned char × 2 | 2 bytes | — | Set/ Get | | | |



© 2000 - 2023 ECHONET Consortium

| | | | | | | | | | |
|---|---|---|---|---|---|---|---|---|---|
| power consumption measurement (duplex) | | 1st byte: Acquisition start channel<br>0x01–0xFC (1–252)<br>2nd byte: Range from the acquisition start channel (0x01–0x3C: 1–60) | | | | | | | |
| Measured instantaneous power consumption list (duplex) | 0xBE | This property indicates the measured instantaneous power consumptions of measurement channels specified by the property of "Channel range specification for instantaneous power consumption measurement (duplex)."<br>1st byte: Acquisition start channel<br>0x01–0xFC (1–252)<br>2nd byte: Range from the acquisition start channel (0x01–0x3C: 1–60)<br>3rd byte and later:<br>Measured instantaneous power consumption<br>0x80000001–0x7FFFFFFD<br>(-2,147,483,647–2,147,483,645) | unsigned char + unsigned char + (signed long (Max) × 60) | (Max) 242 bytes | W | Get | | | |

Note: In the "Announcement at status change" column, ○ denotes mandatory processing when the property is implemented.

Forward and reverse directions are defined with reference to the figure below.

For master metering, forward current is defined as forward direction, and reverse current as reverse direction. Power consumption by air conditioning or lighting is defined as forward direction. Power generation by photovoltaic generator (PV), fuel cell (FC), or similar household solar power generation system is defined as reverse direction. For storage battery (SB), electric vehicle (EV/EHV), or similar battery system, charged energy is defined as forward direction, and discharged energy as reverse direction.

For the properties defined in this class to indicate measured instantaneous current and measured instantaneous power consumption, forward direction shall be handled as a positive value, and reverse direction as a negative value.

If electric power under measurement is identifiable, such as generated or discharged power, a measured value in the reverse direction may be handled as a positive value. For example, if PV measurement is implemented as an independent instance code of the power distribution board metering class, generated power may be defined as forward direction.



© 2000 - 2023 ECHONET Consortium

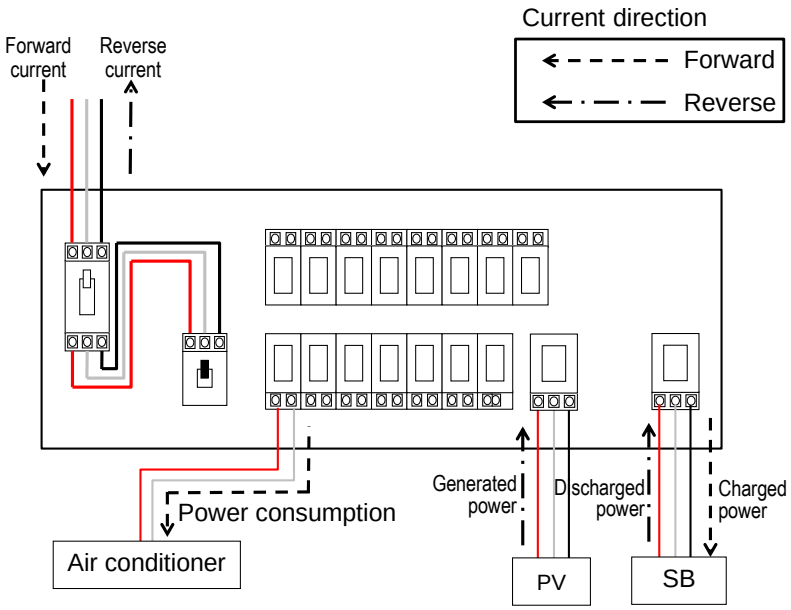


As to the definition of simplex and duplex, a property defined as duplex can be used for installation where both charged and discharged currents can be detected, for example, in SB. In addition, a property defined as simplex by separating charging and discharging may be used for implementation. The assignment of simplex and duplex properties to circuits shall depend on the implementation because it differs between the measuring points and sensors or systems installed.

(1) Operation status (a property inherited from the device object super class)

This property indicates whether the functions specific to this class are operating (ON) or not (OFF). In the case of a node in which this class is implemented and the functions specific to this class start operating upon startup of the node, this property may be implemented with the value fixed at 0x30 (operation status ON).

(2) Measured cumulative amount of electric energy (normal and reverse directions)

This property indicates the measured cumulative amount of electric energy using an 8-digit decimal notation number. The property value for the normal direction is the value for the power flow, and the property value for the reverse direction is the value for the reverse power flow. The unit is indicated by the “Unit for cumulative amount of electric energy” property (EPC = 0xC2). When the value of the “Unit for cumulative amount of electric energy” property (which indicates the multiplying factor for measured cumulative amount of electric energy) is 0x00, 0x01, 0x02, 0x03, 0x04, 0x0A, 0x0B, 0x0C or 0x0D, the unit shall be 1 kWh, 0.1 kWh, 0.01 kWh, 0.001 kWh, 0.0001 kWh, 10 kWh, 100 kWh, 1000 kWh or 10000 kWh, respectively. The property value range is from 0x00000000 to 0x05F5E0FF (from 0 to 99,999,999). In the event of a measured



© 2000 - 2023 ECHONET Consortium

cumulative electric energy amount overflow, the counting of the measured cumulative amount of electric energy shall be restarted from 0x00000000.

Example:

If the value of the "Measured cumulative amount of electric energy" property indicates that the measured cumulative amount of electric energy is 12345678 and the value of the "Unit for cumulative amount of electric energy" property is 0x03, the actual measured cumulative amount would be:

12345678 × 0.001 kW = 12345.678 kWh

Overflow : Counting shall be restarted from 0x00000000.

No data : 0xFFFFFFFE

(3) Unit for cumulative amount of electric energy

This property indicates the unit for cumulative amount of electric energy (EPC = 0xC0, 0xC1).

| Property value | Unit (multiplying factor) for cumulative amount of electric energy |
|---|---|
| 0x00 | 1 kWh |
| 0x01 | 0.1 kWh |
| 0x02 | 0.01 kWh |
| 0x03 | 0.001 kWh |
| 0x04 | 0.0001 kWh |
| 0x0A | 10 kWh |
| 0x0B | 100 kWh |
| 0x0C | 1000 kWh |
| 0x0D | 10000 kWh |

(4) Historical data of measured cumulative amount of electric energy (normal and reverse directions)

This property indicates the current setting of the "Day for which the historical data of measured cumulative amount of electric energy is to be retrieved" property (EPC = 0xC5; value range = 0x00–0x63 (0–99)) and the historical data of measured cumulative amount of electric energy for the day specified by the "Day for which the historical data of measured cumulative amount of electric energy is to be retrieved" property, which consists of 48 pieces of half-hourly data for the preceding 24 hours. The unit is indicated by the "Unit for cumulative amount of electric energy" property. When the value of the "Unit for cumulative amount of electric energy" property is 0x00, 0x01, 0x02, 0x03, 0x04, 0x0A, 0x0B, 0x0C or 0x0D, the unit shall be 1 kWh, 0.1 kWh, 0.01 kWh, 0.001 kWh, 0.0001 kWh, 10 kWh, 100 kWh, 1000 kWh or 10000 kWh, respectively. The half-hourly cumulative electric energy amount measurements shall be measurements that have been taken every hour and every half-hour by reference to the time specified by the "Current time setting" property (EPC = 0x97). The (8-digit) measurements (these are the measurements from the



© 2000 - 2023 ECHONET Consortium

meter, not the cumulated amounts for the 30-minute periods) shall be stored in the order they have been taken, with the oldest and newest measurements stored in the highest-order and lowest-order bytes, respectively. The value range is from 0x00000000 to 0x05F5E0FF (from 0 to 99,999,999). For the hours and half hours at which the amount of electric energy was not measured, 0xFFFFFFFE shall be used as the historical data value.

(5) Day for which the historical data of measured cumulative amount of electric energy is to be retrieved (normal and reverse directions)

Specifies the day for which the historical data of measured cumulative amount of electric energy (EPC = 0xC3, C4) is to be retrieved. The value range is from 0x00 to 0x63 (from 0 to 99).

0x00 (0): historical data for the current day (up to the last hour)

0x63 (99): historical data for the day that precedes the current day by 99 days

When there is no data for the specified day, the “Day for which the historical data of measured cumulative amount of electric energy is to be retrieved” setting of the “Historical data of measured cumulative amount of electric energy” property shall be set to 0xFF and all half-hourly value settings shall be set to 0xFFFFFFFE.

(6) Measured instantaneous electric power

This property indicates the measured effective instantaneous electric power in watts. The value range is from 0x80000001 to 0x7FFFFFFD (from -2147483647 to 2147483645).

Value range: from -2,147,483,647 to 2,147,483,645W (unit of measurement: watts)

*Underflow : 0x80000000
Overflow : 0x7FFFFFFF
No data : 0x7FFFFFFE

(7) Measured instantaneous currents

This property indicates the measured effective instantaneous R and T phase currents in increments of 0.1A. The value range is from 0x8001 to 0x7FFD (from -3276.7 to 3276.5).

(In the case of a single-phase, two-wire system, the data shall be stored in the R phase field and 0x7FFE shall be set in the T phase field.)

Range: from -3276.7 to 3276.5A (unit of measurement: 0.1A)

Example:

single-phase, three-wire system: 0x03E9 0x03E7 → 100.1,099.9 (A)

single-phase, two-wire system: 0xFC19 0x7FFE → -99.9 not measured (A)

*Underflow : 0x8000
Overflow : 0x7FFF
No data : 0x7FFE



© 2000 - 2023 ECHONET Consortium

(8) Measured instantaneous currents

This property indicates the measured effective instantaneous R-S(N) and S(N)-T voltages in volts. The value range is from 0x0000 to 0xFFFD (from 0 to 6553.3).

(In the case of a single-phase, two-wire system, the data shall be stored in the R-S(N) field and 0xFFFE shall be set in the S(N)-T field.)

Range: from 0.0 to 6553.3V (unit of measurement: 0.1V)

Example:

single-phase, three-wire system: 0x0451 0x03E7 → 110.5 099.9 (V)

single-phase, two-wire system: 0x03E7 0xFFFE → 99.9 not measured (V)

*Overflow : 0xFFFF

No data : 0xFFFE

(9) Measurement channels 1 to 32

This property indicates the cumulative amount of electric energy (in kWh) and effective instantaneous currents (in increments of 0.1A) for the respective measurement channel (each EPC code).

The data format for the cumulative amount of electric energy is the same as that for the “Measured cumulative amount of electric energy” property (0xC0). The format for the effective instantaneous currents is the same as that for the “Measured instantaneous currents” property (0xC7). The unit for the cumulative amount of electric energy is the same as that for the “Unit for cumulative amount of electric energy” property (0xC2).

* The voltage values shall be taken from 0xC8.

(10) Master rated capacity

This property indicates the rated capacity of the master circuit. The value range for this property is 0x00 to 0xFD (0 to 253) and the unit is A.

(11) Number of measurement channels (simplex)

This property indicates the number of channels for simplex current and power consumption measurement. The channels are for the measurement of instantaneous current consumption, cumulative amount of electric energy consumption, and instantaneous power consumption about load equipment (air conditioner, washing machine, etc.). They are also for the measurement of instantaneous generated current, amount of generated energy, and instantaneous power generation about power generation equipment (solar photovoltaic generation, etc.).

The value range for this property is 0x01 to 0xFC (1 to 252). 0xFD means that the number of measurement channels is unknown.

The number of channels defined by this property refers to the number of measurement channels indicated by EPC = 0xB2 to 0xB7.



© 2000 - 2023 ECHONET Consortium

(12) Channel range specification for cumulative amount of electric energy consumption measurement (simplex)

This property indicates the range of measurement channels to be acquired by the “measured cumulative amount of electric energy consumption list (simplex)” property (EPC: 0xB3).

1st byte indicates the measurement channel at which to start acquisition. The value range for this property is 0x01 to 0xFC (1 to 252). 2nd byte indicates the range of acquisition from the acquisition start measurement channel. The value range is 0x01 to 0x3C (1 to 60).

The initial value of this property is 0xFD (no setting) for the acquisition start measurement channel and 0xFD (no setting) for the range from the acquisition start measurement channel.

When this property is installed, the “number of measurement channels (simplex)” property (EPC: 0xB1) and the “measured cumulative amount of electric energy consumption list (simplex)” property (EPC: 0xB3) are mandatory.

The value of this property is not updated when a property value write request is made by specifying a range beyond the number of measurement channels indicated by the “number of measurement channels (simplex)” property (EPC: 0xB1).

(13) Measured cumulative amount of electric energy consumption list (simplex)

This property indicates the measured cumulative amount of electric energy consumptions of measurement channels in the range specified by the “channel range specification for cumulative amount of electric energy consumption measurement (simplex)” property (EPC: 0xB2).

1st byte indicates the measurement channel at which to start acquisition. The value range is 0x01 to 0xFC (1 to 252). 2nd byte indicates the range of acquisition from the acquisition start measurement channel. The value range is 0x01 to 0x3C (1 to 60). Starting from the acquisition start measurement channel, measured cumulative amount of electric energy consumption is stored sequentially in 3rd byte and later for the number of channels specified in the acquisition range. The format is the same as for the “measured cumulative amount of electric energy consumption (forward direction)” property (EPC: 0xC0) and the “measured cumulative amount of electric energy consumption (reverse direction)" property (EPC: 0xC1).

The initial value of this property is 0xFD (no setting) for the acquisition start measurement channel, 0xFD (no setting) for the range from the acquisition start measurement channel, and 0xFFFFFFFE (no data) for the measured cumulative amount of electric energy consumption (initial value: 0xFDFDFFFFFFFE).

When this property is installed, the “number of measurement channels (simplex)” property (EPC: 0xB1) and the “channel range specification for cumulative amount of electric energy consumption measurement (simplex)” property (EPC: 0xB2) are mandatory.



© 2000 - 2023 ECHONET Consortium

(14) Channel range specification for instantaneous current measurement (simplex)

This property indicates the range of measurement channels to be acquired by the "measured instantaneous current list (simplex)" property (EPC: 0xB5).

1st byte indicates the measurement channel at which to start acquisition. The value range is 0x01 to 0xFC (1 to 252). 2nd byte indicates the range of acquisition from the acquisition start measurement channel. The value range is 0x01 to 0x3C (1 to 60).

The initial value of this property is 0xFD (no setting) for the acquisition start channel and 0xFD (no setting) for the range from the acquisition start measurement channel.

When this property is installed, the "number of measurement channels (simplex)" property (EPC: 0xB1) and the "measured instantaneous current list (simplex)" property (EPC: 0xB5) are mandatory.

The value of this property is not updated when a property value write request is made by specifying a range beyond the number of measurement channels indicated by the "number of measurement channels (simplex)" property (EPC: 0xB1).

(15) Measured instantaneous current list (simplex)

This property indicates the measured instantaneous currents of measurement channels in the range specified by the "channel range specification for instantaneous current measurement (simplex)" property (EPC: 0xB4).

1st byte indicates the measurement channel at which to start acquisition. The value range is 0x01 to 0xFC (1 to 252). 2nd byte indicates the range of acquisition from the acquisition start measurement channel. The value range is 0x01 to 0x3C (1 to 60).

Starting from the acquisition start measurement channel, measured instantaneous current is stored sequentially in 3rd byte and later for the number of channels specified in the acquisition range. The format is the same as for the "measured instantaneous current" property (EPC: 0xC7).

The initial value of this property is 0xFD (no setting) for the acquisition start measurement channel, 0xFD (no setting) for the range from the acquisition start measurement channel, and 0x7FFE7FFE (no data) for the measured instantaneous current (R and T phases) (initial value: 0xFDFD7FFE7FFE).

When this property is installed, the "number of measurement channels (simplex)" property (EPC: 0xB1) and the "channel range specification for instantaneous current measurement (simplex)" property (EPC: 0xB4) are mandatory.

(16) Channel range specification for instantaneous power consumption measurement (simplex)

This property indicates the range of measurement channels to be acquired by the "measured instantaneous power consumption list (simplex)" property (EPC: 0xB7).

1st byte indicates the measurement channel at which to start acquisition. The value range is 0x01 to



© 2000 - 2023 ECHONET Consortium

0xFC (1 to 252). 2nd byte indicates the range of acquisition from the acquisition start measurement channel. The value range is 0x01 to 0x3C (1 to 60).

The initial value of this property is 0xFD (no setting) for the acquisition start measurement channel and 0xFD (no setting) for the range from the acquisition start measurement channel.

When this property is installed, the “number of measurement channels (simplex)” property (EPC: 0xB1) and the “measured instantaneous power consumption list (simplex)” property (EPC: 0xB7) are mandatory.

The value of this property is not updated when a property value write request is made by specifying a range beyond the number of measurement channels indicated by the “number of measurement channels (simplex)” property (EPC: 0xB1).

(17) Measured instantaneous power consumption list (simplex)

This property indicates the measured instantaneous power consumptions of measurement channels in the range specified by the “channel range specification for instantaneous power consumption measurement (simplex)” property (EPC: 0xB6).

1st byte indicates the measurement channel at which to start acquisition. The value range is 0x01 to 0xFC (1 to 252). 2nd byte indicates the range of acquisition from the acquisition start measurement channel. The value range is 0x01 to 0x3C (1 to 60).

Starting from the acquisition start measurement channel, measured instantaneous power consumption is stored sequentially in 3rd byte and later for the number of channels specified in the acquisition range. The format is the same as for the “measured instantaneous power consumption” property (EPC: 0xC6).

The initial value of this property is 0xFD (no setting) for the acquisition start measurement channel, 0xFD (no setting) for the range from the acquisition start measurement channel, and 0x7FFFFFFE (no data) for the measured instantaneous power consumption (initial value: 0xFDFD7FFFFFFE).

When this property is installed, the “number of measurement channels (simplex)” property (EPC: 0xB1) and the “channel range specification for instantaneous power consumption measurement (simplex)” property (EPC: 0xB6) are mandatory.

(18) Number of measurement channels (duplex)

This property indicates the number of channels for duplex current and power consumption measurement. The channels are for the measurement of cumulative amount of electric energy consumption (forward direction)/(reverse direction), instantaneous current, and instantaneous power consumption for charging and discharging equipment, such as storage battery, EV, and PHV. The value range for this property is 0x01 to 0xFC (1 to 252). 0xFD means that the number of measurement channels is unknown.



© 2000 - 2023 ECHONET Consortium

The number of channels defined by this property refers to the number of measurement channels indicated by EPC = 0xB9 to 0xBE.

(19) Channel range specification for cumulative amount of electric energy consumption measurement (duplex)

This property indicates the range of measurement channels to be acquired by the "measured cumulative amount of electric energy consumption list (duplex)" property (EPC: 0xBA).

1st byte indicates the measurement channel at which to start acquisition. The value range is 0x01 to 0xFC (1 to 252). 2nd byte indicates the range of acquisition from the acquisition start measurement channel. The value range is 0x01 to 0x1E (1 to 30).

The initial value of this property is 0xFD (no setting) for the acquisition start measurement channel and 0xFD (no setting) for the range from the acquisition start measurement channel.

When this property is installed, the "number of measurement channels (duplex)" property (EPC: 0xB8) and the "measured cumulative amount of electric energy consumption list (duplex)" property (EPC: 0xBA) are mandatory.

The value of this property is not updated when a property value write request is made by specifying a range beyond the number of measurement channels indicated by the "number of measurement channels (duplex)" property (EPC: 0xB8).

(20) Measured cumulative amount of electric energy consumption list (duplex)

This property indicates the measured cumulative amount of electric energy consumptions of measurement channels in the range specified by the "channel range specification for cumulative amount of electric energy consumption measurement (duplex)" property (EPC: 0xB9).

1st byte indicates the measurement channel at which to start acquisition. The value range is 0x01 to 0xFC (1 to 252). 2nd byte indicates the range of acquisition from the acquisition start measurement channel. The value range is 0x01 to 0x1E (1 to 30).

Starting from the acquisition start measurement channel, measured cumulative amount of electric energy consumption (forward direction) and measured cumulative amount of electric energy consumption (reverse direction) are stored sequentially in 3rd byte and later for the number of channels specified in the acquisition range. The format is the same as for the "measured cumulative amount of electric energy consumption (forward direction)" property (EPC: 0xC0) and the "measured cumulative amount of electric energy consumption (reverse direction)" property (EPC: 0xC1).

The initial value of this property is 0xFD (no setting) for the acquisition start measurement channel, 0xFD (no setting) for the range from the acquisition start measurement channel, and 0xFFFFFFFEFFFFFFFE (no data) for the measured cumulative amount of electric energy



© 2000 - 2023 ECHONET Consortium

consumption (initial value: 0xFDFDFFFFFFFEFFFFFFFE).

When this property is installed, the “number of measurement channels (duplex)” property (EPC: 0xB8) and the “channel range specification for cumulative amount of electric energy consumption measurement (duplex)” property (EPC: 0xB9) are mandatory.

(21) Channel range specification for instantaneous current measurement (duplex)

This property indicates the range of measurement channels to be acquired by the “measured instantaneous current list (duplex)” property (EPC: 0xBC).

1st byte indicates the measurement channel at which to start acquisition. The value range is 0x01 to 0xFC (1 to 252). 2nd byte indicates the range of acquisition from the acquisition start measurement channel. The value range is 0x01 to 0x3C (1 to 60).

The initial value of this property is 0xFD (no setting) for the acquisition start measurement channel and 0xFD (no setting) for the range from the acquisition start measurement channel.

When this property is installed, the “number of measurement channels (duplex)” property (EPC: 0xB8) and the “measured instantaneous current list (duplex)” property (EPC: 0xBC) are mandatory.

The value of this property is not updated when a property value write request is made by specifying a range beyond the number of measurement channels indicated by the “number of measurement channels (duplex)” property (EPC: 0xB8).

(22) Measured instantaneous current list (duplex)

This property indicates the measured instantaneous currents of measurement channels in the range specified by the “channel range specification for instantaneous current measurement (duplex)” property (EPC: 0xBB).

1st byte indicates the measurement channel at which to start acquisition. The value range for this property is 0x01 to 0xFC (1 to 252). 2nd byte indicates the range of acquisition from the acquisition start measurement channel. The value range is 0x01 to 0x3C (1 to 60).

Starting from the acquisition start measurement channel, measured instantaneous current is stored sequentially in 3rd byte and later for the number of channels specified in the acquisition range. The format is the same as for the “measured instantaneous current” property (EPC: 0xC7).

The initial value of this property is 0xFD (no setting) for the acquisition start measurement channel, 0xFD (no setting) for the range from the acquisition start measurement channel, and 0x7FFE7FFE (no data) for the measured instantaneous current (R and T phases) (initial value: 0xFDFD7FFE7FFE).

When this property is installed, the “number of measurement channels (duplex)” property (EPC: 0xB8) and the “channel range specification for instantaneous current measurement (duplex)” property (EPC: 0xBB) are mandatory.



© 2000 - 2023 ECHONET Consortium

(23) Channel range specification for instantaneous power consumption measurement (duplex)

This property indicates the range of measurement channels to be acquired by the "measured instantaneous power consumption list (duplex)" property (EPC: 0xBE).

1st byte specifies the acquisition start measurement channel and 2nd byte specifies the range from the acquisition start measurement channel. The specification range is from 0x01 to 0x3C (1 to 60).

The initial value of this property is 0xFD (no setting) for the acquisition start measurement channel and 0xFD (no setting) for the range from the acquisition start measurement channel.

When this property is installed, the "number of measurement channels (duplex)" property (EPC: 0xB8) and the "measured instantaneous power consumption list (duplex)" property (EPC: 0xBE) are mandatory.

The value of this property is not updated when a property value write request is made by specifying a range beyond the number of measurement channels indicated by the "number of measurement channels (duplex)" property (EPC: 0xB8).

(24) Measured instantaneous power consumption list (duplex)

This property indicates the measured instantaneous power consumptions of measurement channels in the range specified by the "channel range specification for instantaneous power consumption measurement (duplex)" property (EPC: 0xBD).

1st byte indicates the measurement channel at which to start acquisition. The value range for this property is 0x01 to 0xFC (1 to 252). 2nd byte indicates the range of acquisition from the acquisition start measurement channel. The value range for this property is 0x01 to 0x3C (1 to 60).

Starting from the acquisition start measurement channel, measured instantaneous power consumption is stored sequentially in 3rd byte and later for the number of channels specified in the acquisition range. The format is the same as for the "measured instantaneous power consumption" property (EPC: 0xC6).

The initial value of this property is 0xFD (no setting) for the acquisition start measurement channel, 0xFD (no setting) for the range from the acquisition start measurement channel, and 0x7FFFFFFE (no data) for the measured instantaneous power consumption (initial value: 0xFDFD7FFFFFFE).

When this property is installed, the "number of measurement channels (duplex)" property (EPC: 0xB8) and the "channel range specification for instantaneous power consumption measurement (duplex)" property (EPC: 0xBD) are mandatory.



© 2000 - 2023 ECHONET Consortium

# 3．3．25 Requirements for low-voltage smart electric energy meter class

Class group code : 0x02

Class code : 0x88

Instance code : 0x01–0x7F (0x00: All-instance specification code)

| Property name | EPC | Contents of property<br>Value range (decimal notation) | Data type | Data size | Unit | Access rule | Man-datory | Announce-ment at status change | Rem ark |
|---|---|---|---|---|---|---|---|---|---|
| Operation status | 0x80 | This property indicates the ON/OFF status.<br>ON = 0x30, OFF = 0x31 | unsigned char | 1 byte | — | Set<br>Get | <br>○ | ○ | |
| Route B Identification number | 0xC0 | This property indicates a number that allows low-voltage smart electric energy meters to be uniquely identified in the domain.<br>The following value ranges are available in Japan<br>1st byte: 0x00<br>2nd–4th bytes: Manufacturer code 0x000000–0xFFFFFF<br>5th–16th bytes: free area | unsigned char | 16 byte | | Get | ○*2 | | |
| One-minute measured cumulative amounts of electric energy measured (normal and reverse directions) | 0xD0 | This property indicates the most recent cumulative amount of electric energy measured at 1-minute intervals held by the meter in the format of 4 bytes for date of measurement, 3 bytes for time of measurement, and 4 bytes for cumulative electric energy, and 4 bytes for cumulative electric energy (reverse direction).<br>・Date of measurement: YYYY:MM:DD<br>・Measurement time: hh:mm:ss<br>・Cumulative electric energy (normal direction): maximum 8 digits in decimal notation<br>・Cumulative electric energy (reverse direction): maximum 8 digits in decimal notation<br>1st–4th bytes: Measurement date<br>YYYY: 0x0001–0x270F (1–9999)<br>MM: 0x01–0x0C (1–12)<br>DD: 0x01–0x1F (1–31)<br>5th–7th bytes: time of measurement<br>hh: 0x00-0x17 (0–23)<br>mm: 0x00-0x3B (0–59)<br>ss: 0x00–0x3B (0–59)<br>8th–11th bytes: cumulative amounts of electric energy measured (normal direction)<br>0x00000000–0x05F5E0FF (0–99,999,999)<br>12th–15th bytes: cumulative amounts of electric energy measured (reverse direction):<br>0x00000000–0x05F5E0FF (0–99,999,999) | unsigned short ＋ unsigned char×2 ＋ unsigned char×3 ＋ unsigned long ＋ unsigned long | 15 byte | Year, month, day, hour, minute, second, kWh | Get | ○ | | |
| Coefficient | 0xD3 | This property indicates the coefficient for converting measured cumulative amount of electric energy | unsigned long | 4 bytes | — | Get | | | |



© 2000 - 2023 ECHONET Consortium

| | | | | | | | | | |
|---|---|---|---|---|---|---|---|---|---|
| | | and historical data to actual usage amount using a 6-digit decimal notation.<br>0x00000000–0x000F423F (000000–999999) | | | | | | | |
| Number of effective digits for cumulative amount of electric energy | 0xD7 | This property indicates the number of effective digits for measured cumulative amount of electric energy.<br>0x01–0x08 (1–8) | unsigned char | 1 byte | digit | Get | ○ | | |
| Measured cumulative amount of electric energy (normal direction) | 0xE0 | This property indicates the measured cumulative amount of electric energy using a maximum 8-digit decimal notation number.<br>0x00000000–0x05F5E0FF (0–99,999,999) | unsigned long | 4 bytes | kWh | Get | ○ | | |
| Unit for cumulative amount of electric energy (normal and reverse directions) | 0xE1 | This property indicates the unit (multiplying factor) used for the measured cumulative amount of electric energy and the historical data of measured cumulative amount of electric energy.<br>0x00: 1kWh<br>0x01: 0.1kWh<br>0x02: 0.01kWh<br>0x03: 0.001kWh<br>0x04: 0.0001kWh<br>0x0A: 10kWh<br>0x0B: 100kWh<br>0x0C: 1000kWh<br>0x0D: 10000kWh | unsigned char | 1 byte | — | Get | ○ | | |
| Historical data of measured cumulative amount of electric energy 1 (normal direction) | 0xE2 | This property indicates the day for which the historical data of measured cumulative amount of electric energy is to be retrieved 1 and the historical data of measured cumulative amount of electric energy (normal direction), which consists of 48 items of half-hourly data for the preceding 24 hours (00:00 to 23:30) of the day by time series from the highest-order byte.<br>1-2 bytes: day for which the historical data of measured cumulative amount of electric energy is to be retrieved 0x0000–0x0063 (0-99)<br>3 and succeeding bytes: measured cumulative amount of electric energy 0x00000000–0x05F5E0FF (0–99,999,999) | unsigned short + unsigned long × 48 | 194 bytes | kWh | Get | ○ | | |
| Measured cumulative amount of electric energy (reverse direction) | 0xE3 | This property indicates the measured cumulative amount of electric energy using a maximum 8-digit decimal notation number.<br>0x00000000–0x05F5E0FF (0–99,999,999) | unsigned long | 4 bytes | kWh | Get | ○ | | Note 1 |



© 2000 - 2023 ECHONET Consortium

| | | | | | | | | | |
|---|---|---|---|---|---|---|---|---|---|
| Historical data of measured cumulative amount of electric energy 1 (reverse direction) | 0xE4 | This property indicates the day for which the historical data of measured cumulative amount of electric energy is to be retrieved 1 and the historical data of measured cumulative amount of electric energy (reverse direction), which consists of 48 items of half-hourly data for the preceding 24 hours (00:00 to 23:30) of the day by time series from the highest-order byte.<br>1-2 bytes: day for which the historical data of measured cumulative amount of electric energy is to be retrieved 0x0000–0x0063 (0–99)<br>3 and succeeding bytes: measured cumulative amount of electric energy 0x00000000–0x05F5E0FF (0–99,999,999) | unsigned short + unsigned long × 48 | 194 bytes | kWh | Get | ○ | | Note 1 |
| Day for which the historical data of measured cumulative amount of electric energy is to be retrieved 1 | 0xE5 | This property indicates the day for which the historical data of measured cumulative amount of electric energy (which consists of 48 items of half-hourly data for the preceding 24 hours) is to be retrieved.<br>0x00–0x63<br>(0–99)<br>0: current day<br>1–99: previous day – day that precedes the current day by 99 days | unsigned char | 1 byte | | Set/ Get | ○ | | |
| Measured instantaneous electric power | 0xE7 | This property indicates the measured effective instantaneous electric power in 1W unit.<br>0x80000001–0x7FFFFFFD<br>(-2,147,483,647–2,147,483,645) | signed long | 4 bytes | W | Get | ○ | | |
| Measured instantaneous currents | 0xE8 | This property indicates the measured effective instantaneous R and T phase currents in 0.1A unit.<br>In the case of a single-phase, two-wire system, 0x7FFE shall be used for the T phase.<br>0x8001–0x7FFD (R phase): 0x8001–0x7FFD (T phase)<br>(-3,276.7–3,276.5): (-3,276.7–3,276.5) | signed short × 2 | 4 bytes | 0.1 A | Get | ○ | | |
| Cumulative amount of electric energy measured at fixed time (normal direction) | 0xEA | This property indicates the most recent cumulative amount of electric energy (normal direction) measured at 30-minute intervals held by the meter in the format of 4 bytes for date of measurement, 3 bytes for time of measurement, and 4 bytes for cumulative electric energy (normal direction).<br>date of measurement YYYY:MM:DD<br>time of measurement hh:mm:ss<br>cumulative electric energy: a maximum 8-digit decimal notation number | unsigned short + unsigned char ×2 + unsigned char × 3 + unsigned long | 11 bytes | year, month, day, hour minute, second and kWh | Get | ○ | | |



© 2000 - 2023 ECHONET Consortium

| | | | | | | | | | |
|---|---|---|---|---|---|---|---|---|---|
| | | 1–4 bytes: date of measurement<br>YYYY: 0x0001–0x270F (1–9999)<br>MM: 0x01–0x0C (1–12)<br>DD: 0x01–0x1F (1–31)<br>5–7 bytes: time of measurement<br>hh: 0x00–0x17 (0–23)<br>mm: 0x00–0x3B (0–59)<br>ss: 0x00–0x3B (0–59)<br>8–11 bytes: cumulative amount of electric energy measured<br>0x00000000–0x05F5E0FF (0–99,999,999) | | | | | | | |
| Cumulative amount of electric energy measured at fixed time (reverse direction) | 0xEB | This property indicates the most recent cumulative amount of electric energy (reverse direction) measured at 30-minute intervals held by the meter in the format of 4 bytes for date of measurement, 3 bytes for time of measurement, and 4 bytes for cumulative electric energy (reverse direction).<br>date of measurement<br>YYYY:MM:DD<br>time of measurement hh:mm:ss<br>cumulative electric energy: a maximum 8-digit decimal notation number | unsigned short + unsigned char × 2 + unsigned char × 3 + unsigned long | 11 bytes | year, month, day, hour minute, second and kWh | Get | ○ | | Note 1 |
| | | 1–4 bytes: date of measurement<br>YYYY: 0x0001–0x270F (1–9999)<br>MM: 0x01–0x0C (1–12)<br>DD: 0x01–0x1F (1–31)<br>5–7 bytes: time of measurement<br>hh: 0x00–0x17 (0–23)<br>mm: 0x00–0x3B (0–59)<br>ss: 0x00–0x3B (0–59)<br>8–11 bytes: cumulative amount of electric energy measured<br>0x00000000–0x05F5E0FF (0–99,999,999) | | | | | | | |
| Historical data of measured cumulative amount of electric energy 2 (normal and reverse directions) | 0xEC | This property indicates the historical data of measured cumulative amount of electric energy every 30 minutes in the normal and reverse directions within the past six hours in the form of date and time for which the historical data of measured cumulative amount of electric energy is to be retrieved, the number of collection segments, and cumulative amount of electric energy (8 digits max).<br>・date and time for which the historical data is to be retrieved<br>YYYY:MM:DD:hh:mm<br>・number of collection segments<br>・cumulative amount of electric energy<br>Decimal notation up to 8 digits (6 hours max) | unsigned short + unsigned char × 4 + unsigned char + (unsigned long + unsigned long) × (Max) 12 | Max. 103 bytes | date, time and kWh | Get | | | |



© 2000 - 2023 ECHONET Consortium

| | | | | | | | | | |
|---|---|---|---|---|---|---|---|---|---|
| | | 1–6 bytes: date and time for which the historical data is to be retrieved<br>YYYY: 0x0001–0x270F (1–9999)<br>MM: 0x01–0x0C (1–12)<br>DD: 0x01–0x1F (1–31)<br>hh: 0x00–0x17 (0–23)<br>mm: 0x00/0x1E (0/30)<br>7 byte: number of collection segments<br>0x01–0x0C (1–12)<br>8th and succeeding bytes:<br>Measured cumulative amount of electric energy (normal direction)<br>0x00000000–0x05F5E0FF (0–99,999,999)<br>Measured cumulative amount of electric energy (reverse direction)<br>0x00000000–0x05F5E0FF (0–99,999,999) | | | | | | | |
| Day for which the historical data of measured cumulative amount of electric energy is to be retrieved 2 | 0xED | This property indicates the date and time of historical data of measurements (every 30 minutes) and the number of segments where measurement historical data is collected every 30 minutes.<br>1–6 bytes: date and time for which the historical data is to be retrieved<br>YYYY: 0x0001–0x270F (1–9999 )<br>MM: 0x01–0x0C (1–12 )<br>DD: 0x01–0x1F (1–31 )<br>hh: 0x00–0x17 (0–23 )<br>mm: 0x00/0x1E (0/30 )<br>7 byte: number of collection segments<br>0x01–0x0C (1–12 ) | unsigned short + unsigned char × 4 + unsigned char | 7 bytes | | Set/Get | | | |
| Historical data of measured cumulative amounts of electric energy 3 (normal and reverse directions) | 0xEE | This property indicates the historical data of measured cumulative amounts of electric energy every 1 minutes in the normal and reverse directions within the past ten minutes in the form of date and time for which the historical data of measured cumulative amounts of electric energy is to be retrieved, the number of collection segments, and cumulative amount of electric energy (8 digits max).<br>・Date and time for which the historical data is to be retrieved<br>YYYY:MM:DD:hh:mm<br>・number of collection segments<br>・cumulative amounts of electric energy<br>Maximum 8 digits in decimal notation (10 minutes max) | unsigned short ＋ unsigned char ×4 ＋ unsigned char ＋ (unsigned long ＋ unsigned long) × (Max)10 | Max 87 byte | Year, month, day, hour, minute, second, kWh | Get | ○ | | |



© 2000 - 2023 ECHONET Consortium

| | | | | | | | | | |
|---|---|---|---|---|---|---|---|---|---|
| | | 1st–6th bytes: date and time for which the historical data is to be retrieved<br>YYYY: 0x0001–0x270F (1–9999 year)<br>MM: 0x01–0x0C (1–12 month)<br>DD: 0x01–0x1F (1–31 day)<br>hh: 0x00–0x17 (0–23 hour)<br>mm: 0x00–0x3B (0–59 minute)<br>7th byte: number of collection segments 0x01–0x0A (1–10 piece)<br>8th and following bytes:<br>Measured cumulative amount of electric energy (normal direction)<br>0x00000000–0x05F5E0FF (0–99,999,999)<br>Measured cumulative amount of electric energy (reverse direction)<br>0x00000000–0x05F5E0FF (0–99,999,999) | | | | | | | |
| Day for which the historical data of measured cumulative amounts of electric energy is to be retrieved 3 | 0xEF | This property indicates the date and time of historical data of measurements (every 1 minute) and the number of segments where measurement historical data measured at 1-minute intervals is collected.<br>1st–6th bytes: date and time for which the historical data is to be retrieved (1–9999 year)<br>MM: 0x01–0x0C (1–12 month)<br>DD: 0x01–0x1F (1–31 day)<br>hh: 0x00–0x17 (0–23 hour)<br>mm: 0x00–0x3B (0–59 minute)<br>7th byte: number of collection segments 0x01–0x0A (1–10 piece) | unsigned short + unsigned char ×4 + unsigned char | 7 byte | | Set/ Get | ○ | | |

Note 1: It is mandatory if there is a reverse direction measurement function.

Note 2 Low-voltage smart electric energy meters in Japan must be equipped with this property.

Note 3: In the “Announcement at status change” column, ○ denotes mandatory processing when the property is implemented.

This class is used in the case of smart electric energy meters installed for customers supplied with power of 400V or less.

In the case of smart electric energy meters installed for customers supplied with power of 6.6kV or higher, the high -voltage smart electric energy meter class (Class group code: 0x02, Class code: 0x8A) or “bidirectional high voltage smart electric energy meter class” (Class group code: 0x02, Class code: 0x8A) shall be used.

(1) Operation status (a property inherited from the device object super class)

This property indicates whether the functions specific to this class are operating (ON) or not (OFF). In the case of a node in which this class is implemented and the functions specific to this class start operating upon startup of the node, this property may be implemented with the value fixed at 0x30 (operation status ON).

(2) Route B Identification number



© 2000 - 2023 ECHONET Consortium

This property indicates a number that allows low-voltage smart electric energy meters to be uniquely identified in the domain.

In the case of low-voltage smart meters that are installed by

General Electricity Transmission and Distribution Utility in Japan and that comply with the EMS/aggregation controller smart meter Route B (low-voltage smart meter) operational guidelines [Version 5.0] or later, this property shall be indicated in 16 bytes of the Route B authentication ID. The 1st to 4th bytes are the smart meter installation business operator–specified area of the Route B authentication ID. The 1st byte shall be fixed at 0x00, and the 2nd to 4th bytes shall be the manufacturer codes. The 5th and following bytes are free space for the Route B authentication ID.

(3) One-minute measured cumulative amounts of electric energy measured (normal and reverse directions)

This property indicates the most recent cumulative amounts of electric energy (normal direction and reverse direction) measured at 1-minute intervals (meter reading and not one-minute cumulative value) held by the meter in the format of 4 bytes for date of measurement, 3 bytes for time of measurement, 4 bytes for cumulative electric energy (normal direction), and 4 bytes for cumulative electric energy (reverse direction). The date of measurement shall be indicated in the format of two bytes for year, one byte for month, and one byte for day. The measurement time is indicated using 1 byte for hours, 1 byte for minutes, and 1 byte for seconds. If the meter does not have information on seconds as a unit of measured time, 0x00 is set for seconds. The measured cumulative amounts of electric energy shall be indicated as maximum 8 digits in decimal notation. The unit shall be indicated by the property value of the unit of cumulative electric energy (EPC=0xE1). If a coefficient (EPC=0xD3) is specified, the value multiplied by the coefficient is the electric energy amount. The property value range is from 0x00000000 to 0x05F5E0FF (0 to 99,999,999). If the cumulative amounts of electric energy exceeds the number of effective digits specified by number of effective digits for cumulative amounts of electric energy (EPC=0xD7), the value shall be incremented again from 0x00000000(0). If the meter does not support cumulative electric energy, 0xFFFFFFFE shall be set for no measured data.

Overflow : Counting shall be incremented again from 0x00000000.

No measured data : 0xFFFFFFFE

Example: One-minute measured cumulative amounts of electric energy measured (normal direction)

・YYYY = 0x07E7 (year: 2023), MM = 0x03 (month: 3), DD = 0x0F (day: 15)

・hh = 0x07 (hour: 7), mm = 0x05 (minute: 5), ss = 0x00 (second: 0)

・Cumulative electric energy (normal direction) = 0x0001E240 (00123456)

Number of effective digits for cumulative electric energy (EPC=0xD7): 0x08 (low-order eight digits)



© 2000 - 2023 ECHONET Consortium

Coefficient (EPC=0xD3): No implementing of property (=1)

Unit of cumulative electric energy (EPC=0xE1): 0x02 (0.01kWh)

Date of measurement: March 15, 2023

Time of measurement: 07:05:00

Cumulative electric energy (normal direction) 123456 × 0.01kWh = 1234.56kWh (actual usage amount)

(4) Coefficient

This property indicates the coefficient for converting measured cumulative amount of electric energy and historical data of measured cumulative amount of electric energy to actual usage amounts using a 6-digit decimal notation. If this property is not implemented, the coefficient shall be treated as 1.

(5) Number of effective digits for cumulative amount of electric energy

This property indicates the number of effective digits from the low-order side of the measured cumulative amount of electric energy (data size: 4 bytes, number of digits: 8).

Example:

Number of effective digits for cumulative amount of electric energy 0x08 (eight digits from the low-order side)

The cumulative electric energy value overflows at 0x5F5E0FF(99999999) and increments again from 0x00000000(0).

(6) Measured cumulative amount of electric energy (normal direction)

This property indicates the measured cumulative amount of electric energy in the normal direction (power flow) using an 8-digit decimal notation number. The unit is indicated by the “Unit for cumulative amount of electric energy” property (EPC = 0xE1). The property value range is from 0x00000000 to 0x05F5E0FF (from 0 to 99,999,999). If the cumulative electric energy value exceeds the value specified by the “Number of effective digits for cumulative amount of electric energy” property (EPC = 0xD7), the value shall increment again from 0x00000000(0). When “ Coefficient ” (EPC = 0xD3) is specified, the value multiplied by the coefficient is the actual usage amount.

Example:

If the value of the “Measured cumulative amount of electric energy (normal direction)” property is 0x00BC614E (12345678), the value of the “Coefficient (EPC=0xD3)” property is 0x0000000A (10 times) and the value of the “Unit for cumulative amount of electric energy” property (EPC = 0xE1) is 0x03 (0.001kWh), the actual measured cumulative amount would be:

12345678 × 10× 0.001kW = 123456.78kWh (actual usage amount)

Overflow : Counting shall be restarted from 0x00000000



© 2000 - 2023 ECHONET Consortium

No measured data : 0xFFFFFFFE

(7) Unit for cumulative amount of electric energy (normal and reverse directions)

This property indicates the unit for the measured cumulative amount of electric energy (normal and reverse directions) and the historical data of measured cumulative amount of electric energy.

| Property value | Unit (multiplying factor) for measured cumulative amounts of electric energy |
|---|---|
| 0x00 | 1kWh |
| 0x01 | 0.1kWh |
| 0x02 | 0.01kWh |
| 0x03 | 0.001kWh |
| 0x04 | 0.0001kWh |
| 0x0A | 10kWh |
| 0x0B | 100kWh |
| 0x0C | 1000kWh |
| 0x0D | 10000kWh |

(8) Historical data of measured cumulative amount of electric energy 1 (normal direction)

This property includes two elements. One is the “day for which the historical data of measured cumulative amount of electric energy is to be retrieved” 0x0000 to 0x0063 (0 to 99) specified by “Day for which the historical data of measured cumulative amount of electric energy is to be retrieved 1” (EPC = 0xE5) (day for which the historical data of measured cumulative amount of electric energy is to be retrieved 1 (EPC = 0xE5) indicated in 2 bytes). The other is the historical data of measured cumulative amount of electric energy in the normal direction (meter reading and not 30-minutes cumulative value) every 30 minutes at 00 and 30 minutes every hour for 24 hours (00:00 to 23:30) on the day, 48 times in total, by time series from the highest-order byte.

This property indicates the cumulative amount of electric energy using an 8-digit decimal notation number. The unit is indicated by the “Unit for cumulative amount of electric energy” property (EPC = 0xE1). When “Coefficient” (EPC = 0xD3) is specified, the value multiplied by the coefficient is the actual usage amount. The property value range is from 0x00000000 to 0x05F5E0FF (0 to 99,999,999). If the cumulative amount of electric energy exceeds the number of effective digits specified by “number of effective digits for cumulative amount of electric energy” (EPC = 0xD7), the value shall be increased again from 0x00000000(0). The property value shall be set to 0xFFFFFFFE (no measured data) in the case of no cumulative amount of electric energy (normal direction) of the corresponding time. In the case of default values when “Day for which the historical data of measured cumulative amount of electric energy it to be retrieved 1” (EPC=0xE5) has not been set, the day for which the historical data of measured cumulative amount of electric energy is to be retrieved shall be set to 0x00FF and all half-hourly measurements of cumulative amount of electric energy shall be set to 0xFFFFFFFE.



© 2000 - 2023 ECHONET Consortium

(9) Measured cumulative amount of electric energy (reverse direction)

This property indicates the measured cumulative amount of electric energy in the reverse direction (reverse power flow) using an 8-digit decimal notation number. The unit is indicated by the "Unit for cumulative amount of electric energy" property (EPC = 0xE1). The property value range is from 0x00000000 to 0x05F5E0FF (from 0 to 99,999,999). If the cumulative electric energy value exceeds the value specified by the "Number of effective digits for cumulative amount of electric energy" property (EPC = 0xD7), the value shall increment again from 0x00000000(0). When "Coefficient" (EPC = 0xD3) is specified, the value multiplied by the coefficient is the actual usage amount.

Overflow : Counting shall be restarted from 0x00000000.

No measured data : 0xFFFFFFFE

(10) Historical data of measured cumulative amount of electric energy 1 (reverse direction)

This property includes two elements. One is the "day for which the historical data of measured cumulative amount of electric energy is to be retrieved" 0x0000 to 0x0063 (0 to 99) specified by "Day for which the historical data of measured cumulative amount of electric energy is to be retrieved 1" (EPC = 0xE5) (day for which the historical data of measured cumulative amount of electric energy is to be retrieved 1 (EPC = 0xE5) indicated in 2 bytes). The other is the historical data of measured cumulative amount of electric energy in the reverse direction (meter reading and not 30-minutes cumulative value) every 30 minutes at 00 and 30 minutes every hour for 24 hours (00:00 to 23:30) on the day, 48 times in total, by time series from the highest-order byte.

This property indicates the cumulative amount of electric energy using an 8-digit decimal notation number. The unit is indicated by the " Unit for cumulative amount of electric energy" property (EPC = 0xE1). When "Coefficient" (EPC = 0xD3) is specified, the value multiplied by the coefficient is the actual usage amount. The property value range is from 0x00000000 to 0x05F5E0FF (0 to 99,999,999). If the cumulative amount of electric energy exceed the number of effective digits specified by "number of effective digits for cumulative amount of electric energy" (EPC = 0xD7), the value shall be increased again from 0x00000000(0). The property value shall be set to 0xFFFFFFFE (no measured data) in the case of no cumulative amount of electric energy (reverse direction) of the corresponding time. In the case of default values when "Day for which the historical data of measured cumulative amount of electric energy it to be retrieved 1" (EPC=0xE5) has not been set, the day for which the historical data of measured cumulative amount of electric energy is to be retrieved shall be set to 0x00FF and all half-hourly measurements of cumulative amount of electric energy shall be set to 0xFFFFFFFE.

(11) Day for which the historical data of measured cumulative amount of electric energy is to be retrieved 1

This property specifies the day for which the historical data of measured cumulative amount of electric energy 1 (EPC = 0xE2, 0xE4) is to be retrieved. The value range is from 0x00 to 0x63 (from 0 to 99).



© 2000 - 2023 ECHONET Consortium

0x00 (0): measured historical data for the current day (up to the last hour)

0x63 (99): measured historical data for the day that precedes the current day by 99 days

The default values of this property shall be 0xFF.

(12) Measured instantaneous electric power

This property indicates the measured effective instantaneous electric power in watts. The value range is from 0x80000001 to 0x7FFFFFFD (from -2147483647 to 2147483645).

Range: from -2,147,483,647 to 2,147,483,645W (unit of measurement: watts)

*Underflow : 0x80000000

Overflow : 0x7FFFFFFF

No measured data : 0x7FFFFFFE

(13) Measured instantaneous currents

This property indicates the measured effective instantaneous R and T phase currents in amperes. The value range is from 0x8001 to 0x7FFD (from -3276.7 to 3276.5).

In the case of a single-phase, two-wire system, measured data shall be stored in the R phase field and 0x7FFE (no measured data) shall be set in the T phase field.

Range: from -3276.7 to 3276.5A (unit of measurement: 0.1A)

Example:

single-phase, three-wire system: 0x03E9 0x03E7 → 100.1,099.9 (A)

single-phase, two-wire system: 0xFC19 0x7FFE → -99.9 not measured (A)

*Underflow : 0x8000

Overflow : 0x7FFF

No measured data : 0x7FFE

(14) Cumulative amount of electric energy measured at fixed time (normal direction)

This property indicates the most recent cumulative amount of electric energy (normal direction) measured at 30-minute intervals (every half hour) (meter reading and not 30-minute cumulative value) held by the meter in the format of 4 bytes for date of measurement, 3 bytes for time of measurement, and 4 bytes for cumulative electric energy (normal direction). The date of measurement shall be indicated in the format of two bytes for year, one byte for month, and one byte for day. The time of measurement shall be indicated in the format of one byte for hour, one byte for minute, and one byte for second. If the meter has no second information, 0x00 shall be set for second. The measured cumulative amount of electric energy shall be indicated using an 8-digit decimal notation number. The unit shall be indicated by the “Unit of cumulative amount of electric energy” property (EPC = 0xE1). When “Coefficient” (EPC = 0xD3) is specified, the value multiplied by the coefficient is the actual usage amount. The value range of the property shall be



© 2000 - 2023 ECHONET Consortium

from 0x00000000 to 0x05F5E0FF (0 to 99,999,999). If the cumulative electric energy value exceeds the value specified by the "Number of effective digits for cumulative amount of electric energy" property (EPC = 0xD7), the value shall increment again from 0x00000000(0). If the meter does not support cumulative electric energy (normal direction), 0xFFFFFFFE shall be set for no measured data.

Overflow : Counting shall be restarted from 0x00000000

No measured data : 0xFFFFFFFE

Example:

Cumulative amount of electric energy measured at fixed time (normal direction)

- YYYY = 0x07E7 (year: 2013), MM = 0x03 (month: 3), DD = 0x0F (day: 15)
- hh = 0x07 (hour: 7), mm = 0x00 (minute: 0), ss = 0x00 (second: 0)
- Cumulative electric energy (normal direction) = 0x0001E240 (00123456)

Number of effective digits for cumulative amount of electric energy (EPC = 0xD7): 0x08 (low-order eight digits)

Coefficient (EPC=0xD3): No implementing of property (=1)

Unit for cumulative amount of electric energy (EPC = 0xE1): 0x02 (0.01kWh)

Date of measurement: March 15, 2023

Time of measurement: 07:00:00

Cumulative electric energy (normal direction)

123456 × 0.01kWh = 1234.56kWh (actual usage amount)

(15) Cumulative amount of electric energy measured at fixed time (reverse direction)

This property indicates the cumulative amount of electric energy (reverse direction) measured at 30-minute intervals (every half hour) (meter reading and not 30-minutes cumulative value) held by the meter in the format of 4 bytes for date of measurement, 3 bytes for time of measurement, and 4 bytes for cumulative electric energy (reverse direction). The date of measurement shall be indicated in the format of two bytes for year, one byte for month, and one byte for day. The time of measurement shall be indicated in the format of one byte for hour, one byte for minute, and one byte for second. If the meter has no second information, 0x00 shall be set for second. The measured cumulative amount of electric energy shall be indicated using an 8-digit decimal notation number. The unit shall be indicated by the "Unit for cumulative amount of electric energy" property (EPC = 0xE1). When "Coefficient" (EPC = 0xD3) is specified, the value multiplied by the coefficient is the actual usage amount. The value range of the property shall be from 0x00000000 to 0x05F5E0FF (0 to 99,999,999). If the cumulative electric energy value exceeds the value specified by the "Number of effective digits for cumulative amount of electric energy" property (EPC = 0xD7), the value shall increment again from 0x00000000(0). If the meter does not support cumulative electric energy (reverse direction), 0xFFFFFFFE shall be set for no



© 2000 - 2023 ECHONET Consortium

data.

Overflow : Counting shall be restarted from 0x00000000

No measured data : 0xFFFFFFFE

Example:

Cumulative amount of electric energy measured at fixed time (reverse direction)

- YYYY = 0x07E7 (year: 2023), MM = 0x03 (month: 3), DD = 0x0F (day: 15)
- hh = 0x07 (hour: 7), mm = 0x00 (minute: 0), ss = 0x00 (second: 0)
- Cumulative electric energy (reverse direction) = 0x0001E240 (00123456)

Number of effective digits for cumulative amount of electric energy (EPC = 0xD7): 0x08 (low-order eight digits)

Coefficient (EPC=0xD3): No implementing of property (=1)

Unit for cumulative amount of electric energy (EPC = 0xE1): 0x02 (0.01kWh)

Date of measurement: March 15, 2023

Time of measurement: 07:00:00

Cumulative electric energy (reverse direction)

123456 × 0.01kWh = 1234.56kWh (actual usage amount)

(16) Historical data of measured cumulative amount of electric energy 2 (normal and reverse directions)

This property includes two elements. One is the date and time for which the historical data of measured cumulative amount of electric energy is to be retrieved in the format of YYYY:MM:DD:hh:mm, and the number of collection segments specified by “Day for which the historical data of measured cumulative amount of electric energy is to be retrieved 2” (EPC = 0xED) respectively. The other is the historical data of measured cumulative amount of electric energy every 30 minutes in the normal and reverse directions within the past six hours on the day.

The date and time indicates date by four bytes and time by two bytes in this order. The property value for minutes every hour is 0x00 (0 min) or 0x1E (30 min).

The number of collection segments indicates the count of collecting data about cumulative amount of electric energy every 30 minutes by one byte. The value range is from 0x01 to 0x0C (1 to 12).

Measured cumulative amount of electric energy (meter reading and not 30-minutes cumulative value) is a decimal notation of up to 8 digits. The property of “Unit for measured cumulative amount of electric energy” (EPC = 0xE1) indicates the unit. When “Coefficient” (EPC = 0xD3) is specified, the value multiplied by the coefficient is the actual usage amount. The property value range is from 0x00000000 to 0x05F5E0FF (0 to 99,999,999). With the Measured cumulative amount of electric energy (normal and reverse directions) measured at the time set by “date and time for which the historical data is to be retrieved” as the higher-order byte, the property value



© 2000 - 2023 ECHONET Consortium

indicates the number of segments specified by “day for which the historical data of measured cumulative amount of electric energy is to be retrieved 2” (EPC = 0xED) in reverse time series. If the cumulative amount of electric energy exceeds the number of effective digits specified by “Number of effective digits for cumulative amount of electric energy” (EPC = 0xD7), the value shall be increased again from 0x00000000(0). When cumulative amount of electric energy is not measured or the data is outside the history retention period, the property value shall be set to 0xFFFFFFFE for no measured data.

When “Day for which the historical data of measured cumulative amount of electric energy is to be retrieved 2” (EPC = 0xED) is not set, the initial value shall be set to 0xFFFFFFFFFFFF for date and time for which the historical data of measured cumulative amount of electric energy is to be retrieved, 0x01 for the number of segments, and 0xFFFFFFFE for the 30-minute value of each segment in the normal and reverse directions respectively.

(17) Day for which the historical data of measured cumulative amount of electric energy is to be retrieved 2

This property includes two elements. One is the date and time for which the historical data of measured cumulative amount of electric energy is to be retrieved of a target specified by the “Historical data of measured cumulative amount of electric energy 2 (normal and reverse directions)” (EPC = 0xEC). The other is the number of collection segments where 30-minute measurement historical data is one segment.

The date and time shall be the latest ones of data collection. The format is two bytes for year, one byte for month, one byte for day, one byte for hour, and one byte for minute. Since “Historical data of measured cumulative amount of electric energy 2 (normal and reverse directions)” is data collected at every 30 minutes, the minutes value shall be 0x00 (0 minute) or 0x1E (30 minutes).

The number of collection segments indicates the count of collecting data about measured cumulative amount of electric energy every 30 minutes earlier than the date and time for which the historical data is to be retrieved. The property value range is from 0x01 to 0x0C (1 to 12).

The initial value of this property shall be set to 0xFFFFFFFFFFFF for date and time for which the historical data is to be retrieved and 0x01 for the number of collection segments.

(18) Historical data of measured cumulative amounts of electric energy 3 (normal and reverse directions)

This property indicates the data YYYY:MM:DD:hh:mm set to “day for which the historical data of measured cumulative amounts of electric energy is to be retrieved 3” (EPC=0xEF), the number of collection segments, and date and time for which the historical data is to be retrieved of the measured cumulative amount of electric energy (normal direction) and (reverse direction) as data measured at 1-minute intervals of the measurement result log, in the form of up to a max. 10-minute data.

Cumulative historical data retrieval day and time shall be indicated in the sequence of date (4 bytes) and time (2 bytes), and minutes in the time shall be indicated from 0x00 (0 minute) to 0x3B (59 minutes).



© 2000 - 2023 ECHONET Consortium

The number of data pieces retrieved shall be indicated as 1 byte for the individual measured cumulative amounts of electric energy retrieved every 1 minutes, with a value range of 0x01-0x0A (1-10).

Measured cumulative amount of electric energy (meter reading and not 1-minutes cumulative value) shall be indicated as maximum 8 digits in decimal notation. The property of unit for measured cumulative amounts of electric energy (EPC=0xE1) indicates the unit. When coefficient (EPC=0xD3) is specified, the value multiplied by the coefficient is the actual usage amount. The property value range is from 0x00000000 to 0x05F5E0FF (0-99,999,999). With the measured cumulative amount of electric energy (normal and reverse directions) at the time set by "date and time for which the historical data is to be retrieved" as the higher-order byte, the property value indicates the number of segments specified by "day for which the historical data of measured cumulative amounts of electric energy is to be retrieved 3" (EPC=0xEF) in reverse time series. If the cumulative amount of electric energy exceeds the number of effective digits specified by number of effective digits for cumulative amounts of electric energy (EPC=0xD7), the value shall be incremented again from 0x00000000(0). If there are no measured cumulative amounts of electric energy or the time data are outside the historical data retention period, it shall be taken as no data and the value shall be 0xFFFFFFFE.

In the case of default values with no day for which the historical data of cumulative amounts of electric energy is to be retrieved 3 (EPC=0xEF) has been set, 0xFFFFFFFFFFFF shall be set for the cumulative historical data retrieval day and time and 0x01 for the number of data pieces retrieved, and 0xFFFFFFFE shall be set for the 1-minute value for 1 data piece in each of the normal and reverse directions.

(19) Day for which the historical data of measured cumulative amounts of electric energy is to be retrieved 3

This property indicates the date and time for which the historical data of measured cumulative amounts of electric energy is to be retrieved of a target specified by the historical data of measured cumulative amounts of electric energy 3 (normal and reverse directions)(EPC=0xEE) and the number of collection segments where 1-minute measurement historical data is one segment.

The date and time shall be the latest ones of data collection. The format is two bytes for year, one byte for month, one byte for day, one byte for hour, and one byte for minute. Since the historical data of measured cumulative amounts of electric energy 3 (normal and reverse directions) is data collected at every 1 minute, the minutes value shall be 0x00 (0 minute) thru 0x3B (59 minutes).

The number of collection segments indicates the count of collecting data about measured cumulative amount of electric energy every 1 minutes earlier than the date and time for which the historical data is to be retrieved. The property value range is from 0x01 to 0x0A (1 to 10).



© 2000 - 2023 ECHONET Consortium

The initial value of this property shall be set to 0xFFFFFFFFFFFF for date and time for which the historical data is to be retrieved and 0x01 for the number of collection segments.



© 2000 - 2023 ECHONET Consortium

## 3．3．26 Requirements for smart gas meter class

Class group code : 0x02

Class code : 0x89

Instance code : 0x01–0x7F (0x00: All-instance specification code)

| Property name | EPC | Contents of property<br>Value range (decimal notation) | Data type | Data size | Unit | Access rule | Mandatory | Announcement at status change | Remark |
|---|---|---|---|---|---|---|---|---|---|
| Operation status | 0x80 | This property indicates the ON/OFF status.<br>ON=0x30, OFF=0x31 | unsigned char | 1 byte | － | Set<br>Get | <br>○ | ○ | |
| Gas meter classification setting | 0xE0 | This property indicates the type of the gas meter.<br>0x30: city gas<br>0x31: LP gas<br>0x32: natural gas<br>0x33: others | unsigned char | 1 byte | － | Set/ Get | | | |
| Owner classification setting | 0xE1 | This property indicates the type of owner of the meter.<br>0x30: not specified<br>0x31: city gas<br>0x32: LP gas<br>0x33: private-sector company<br>0x34: individual | unsigned char | 1 byte | － | Set/ Get | | | |
| Measured cumulative gas consumption | 0xE2 | This property indicates the measured cumulative gas consumption in $m^3$.<br>0x00000000–0x3B9AC9FF<br>(0–999,999,999m3) | unsigned long | 4 bytes | 0.001 $m^3$ | Get | ○ | | Note1 |
| Unit for measured cumulative gas consumption | 0xE3 | This property indicates the unit (multiplying factor) for the measured cumulative gas consumption and the historical data of measured cumulative gas consumption.<br>0x00: $1m^3$<br>0x01: $0.1m^3$<br>0x02: $0.01m^3$<br>0x03: $0.001m^3$<br>0x04: $0.0001m^3$<br>0x05: $0.00001m^3$<br>0x06: $0.000001m^3$ | unsigned char | 1 byte | － | Get | | | |
| Historical data of measured cumulative gas consumption | 0xE4 | This property indicates the day for which the historical data of measured cumulative gas consumption is to be retrieved and the historical data of measured cumulative gas consumption, which consists of 48 pieces of half-hourly data for the preceding 24 hours. | unsigned short + unsigned long × 48 | 194 bytes | 0.001 $m^3$ | Get | | | |



© 2000 - 2023 ECHONET Consortium

| | | | | | | | | | |
|---|---|---|---|---|---|---|---|---|---|
| | | 0x0000–0x0063:<br>0x00000000–0x3B9AC9FF<br>(0–99) : (0–999,999.999m$^3$) | | | | | | | |
| Day setting for which the historical data of measured cumulative gas consumption is to be retrieved | 0xE5 | This property indicates the day for which the historical data of measured cumulative gas consumption (which consists of 48 pieces of half-hourly data for the preceding 24 hours) is to be retrieved.<br>0x00–0x63<br>(0–99)<br>0: current day<br>1–99: previous day–day that precedes the current day by 99 days | unsigned char | 1 byte | | Set<br>Get | | | |
| Detection of abnormal value in metering data | 0xE6 | This property indicates whether the meter has detected an abnormal value in the metering data.<br>Abnormal value detected: 0x41<br>No abnormal value detected: 0x42 | unsigned char | 1 byte | — | Get | | | |
| Security data information | 0xE7 | Provides security information about the abnormal states detected by the meter in the form of security data that identifies the abnormal states by means of bit assignment.<br>For details, refer to the explanations under (9). | unsigned char × 10 | 10 bytes | — | Get | | | |
| Valve closure by the Center | 0xE8 | This property indicates whether the Center has closed the gas shutoff valve of the meter.<br>Center has closed the valve: 0x41<br>Center has not closed the valve: 0x42 | unsigned char | 1 byte | — | Get | | | |
| Permission from the Center to reopen the valve closed by the Center | 0xE9 | This property indicates whether permission has been given by the Center to reopen the gas shutoff valve of the meter closed by the Center.<br>Permission has been given by the Center to reopen the gas shutoff valve closed by the Center: 0x41<br>Permission to reopen the gas shutoff valve closed by the Center has not been given by the Center: 0x42 | unsigned char | 1 byte | — | Get | | | |
| Emergency closure of shutoff valve | 0xEA | This property indicates whether the gas shutoff valve of the meter has been closed in response to an emergency.<br>Emergency closure of the shutoff valve has occurred: 0x41<br>No emergency closure of the shutoff valve has occurred: 0x42 | unsigned char | 1 byte | — | Get | | | |
| Shutoff valve status | 0xEB | This property indicates whether the shutoff valve is open or closed.<br>Shutoff valve open: 0x41<br>Shutoff valve closed: 0x42 | unsigned char | 1 byte | — | Get | | | |



© 2000 - 2023 ECHONET Consortium

| | | | | | | | | | |
|---|---|---|---|---|---|---|---|---|---|
| Historical data of shutoff reasons | 0xEC | This property indicates the reasons for the 3 past shutoff valve-based gas shutoffs by means of bit assignment with one byte used for each of the 3 shutoff reasons.<br>Historical data3: Historical data2: Historical data 1<br>0xFF: 0xFF: 0xFF | unsigned char × 3 | 3 bytes | — | Get | | | |
| ID number setting | 0xED | This property indicates the ID number of the meter.<br>000000–FFFFFF<br>(Initial value : “000000”) | unsigned char | 6 bytes | | Set/ Get | | | |
| Verification expiration setting | 0xEE | This property indicates the month and year in which the verification of the meter will expire.<br>YYYYMM<br>YYYY (Year), MM (Month) | unsigned char | 6 bytes | | Set/ Get | | | |
| Measured cumulative gas consumption information with date and time | 0xD0 | This property indicates the cumulative gas consumption and the date and time of measurement.<br>Date of measurement: YYYY:MM:DD<br>Time of measurement: HH:MM:SS<br>Cumulative gas consumption: 9 digits<br>1–4 bytes:<br>0–0x270f:1–0x0C:1–0x1F<br>(=0–9999):(=1–12):(1–31)<br>5–7 bytes:<br>0–0x17:0–0x3B:0—0x3B<br>(=0–23):(=0–59): (=0–59)<br>8–11 bytes:<br>0x00000000–0x3B9AC9FF<br>(0–999,999,999) | unsigned char × 4 + unsigned char × 3 + unsigned long | 11 bytes | Date + Time + 0.001m$^3$ | Get | ○ | | Note1 |
| Historical information of cumulative gas consumption | 0xD1 | This property indicates the historical information of gas consumption measured at every hour, the date and time of history start, cumulative gas consumption at history start and cumulative time interval.<br>Date: YYYY:MM:DD<br>Time: HH:MM:SS<br>Historical information of gas consumption<br>Cumulative gas consumption at history start<br>Cumulative time interval: 5 digits, every minute | unsigned char × 4 + unsigned char × 3 + unsigned long × 24 + unsigned long + unsigned short | 109 bytes | Date + Time + 0.001m$^3$ + 0.001m$^3$ + minute | Get | | | |



© 2000 - 2023 ECHONET Consortium

| | | | | | | | | | |
|---|---|---|---|---|---|---|---|---|---|
| | | 1–4 bytes:<br>0–0x270f:1–0x0C:1–0x1F<br>(=0–9999):(=1–12):(1–31)<br>5–7 bytes:<br>0–0x17:0–0x3B:0–0x3B<br>(=0–23):(=0–59):(=0–59)<br>8–103 bytes:<br>0x00000000–0x0001869F × 24<br>(0–99.999m3) × 24<br>104–107 bytes:<br>0x00000000–0x3B9AC9FF<br>(0–999,999,999 $m^3$)<br>108–109 bytes:<br>0x0001–0xFFFF<br>(1–65535) | | | | | | | |

Note: In the “Announcement at status change” column, ○ denotes mandatory processing when the property is implemented.

Note1: EPC shall be 0xE2 (measured cumulative gas consumption) or 0xD0 (measured cumulative gas consumption information with date and time).

(1) Operation status (a property inherited from the device object super class)

This property indicates whether the functions specific to this class are operating (ON) or not (OFF). In the case of a node in which this class is implemented and the functions specific to this class start operating upon startup of the node, this property may be implemented with the value fixed at 0x30 (operation status ON).

(2) Gas meter classification setting

This property indicates the type of the gas being metered by the meter in the form of meter classification.

(3) Owner classification setting

This property indicates the owner of the meter in the form of owner classification.

(4) Measured cumulative gas consumption

This property indicates the measured cumulative gas consumption using a 9-digit decimal notation number. The unit is indicated by the “Unit for measured cumulative gas consumption” property (EPC = 0xE3). =If the Unit property (EPC = 0xE3) is not installed, however, the unit shall be 0.001m3. If the Unit property (EPC = 0xE3) is installed, the unit shall depend on the property value as specified below. When the value of the “Unit for measured cumulative gas consumption” property (which indicates the multiplying factor for measured cumulative gas consumption) is 0x00, 0x01, 0x02, 0x03, 0x04, 0x05 or 0x06, the unit shall be 1$m^3$, 0.1 $m^3$, 0.01 $m^3$, 0.001 $m^3$, 0.0001 $m^3$, 0.00001 $m^3$ or 0.000001 $m^3$, respectively. The property value range is from 0x00000000 to 3B9AC9FF (from 0 to 999,999,999). In the event of a measured cumulative gas



© 2000 - 2023 ECHONET Consortium

consumption overflow, the counting of the measured cumulative gas consumption shall be restarted from 0x00000000.

Example:

If the value of the "Measured cumulative gas consumption" property indicates that the measured cumulative gas consumption is 123456789 and the value of the "Unit for measured cumulative gas consumption" property is 0x03, the actual measured cumulative gas consumption would be:

$123456789 \times 0.001\ m^3 = 123456.789\ m^3$

Overflow : Counting shall be restarted from 0x00000000

No data : 0xFFFFFFFE

*EPC shall be 0xE2 (measured cumulative gas consumption) or 0xD0 (measured cumulative gas consumption information with date and time).

(5) Unit for measured cumulative gas consumption

This property indicates the unit for measured cumulative gas consumption.

| Property value | Cumulative gas consumption (multiplying factor) |
|---|---|
| 0x00 | $1m^3$ |
| 0x01 | $0.1\ m^3$ |
| 0x02 | $0.01\ m^3$ |
| 0x03 | $0.001\ m^3$ |
| 0x04 | $0.0001\ m^3$ |
| 0x05 | $0.00001\ m^3$ |
| 0x06 | $0.000001\ m^3$ |

*If this property is not installed, the unit for measured cumulative gas consumption shall be 0.001m3.

(6) Historical data of measured cumulative gas consumption

This property indicates the current setting of the "Day setting for which the historical data of measured cumulative gas consumption is to be retrieved" property (EPC = 0xE5; value range = 0x0000–0x0063 (0–99)) ("Day setting for which the historical data of measured cumulative gas consumption is to be retrieved" property (EPC = 0xE5) is indicated in 2 bytes) and the historical data of measured cumulative gas consumption (unit = $0.001m^3$) for the day specified by the "Day setting for which the historical data of measured cumulative gas consumption is to be retrieved" property, which consists of 48 pieces of half-hourly data for the preceding 24 hours. The half-hourly cumulative gas consumption measurements shall be measurements that have been taken every hour and every half-hour by reference to the time specified by the "Current time setting" property (EPC = 0x97). The measurements (unit = $0.001m^3$) shall be stored in the order they have been taken, with the oldest and newest measurements stored in the highest-order and lowest-order bytes, respectively. The value range is from 0x00000000 to 0x3B9AC9FF (from 0 to $999{,}999.999m^3$).



© 2000 - 2023 ECHONET Consortium

(7) Day setting for which the historical data of measured cumulative gas consumption is to be retrieved

Specifies the day for which the historical data of measured cumulative gas consumption is to be retrieved. The value range is from 0x00 to 0x63 (from 0 to 99).

0x00 (0): historical data for the current day (up to the last hour)

0x63 (99): historical data for the day that precedes the current day by 99 days

When there is no data for the specified day, the "Day setting for which the historical data of measured cumulative gas consumption is to be retrieved" setting of the "Historical data of measured cumulative gas consumption" property (EPC = 0xE4) shall be set to 0xFF and all half-hourly value settings shall be set to 0xFFFFFFFE.

(8) Detection of abnormal value in metering data

This property indicates whether the meter has detected an abnormal value in the metering data. The property value shall be 0x41 when an abnormal value has been detected and 0x42 when no abnormal value has been detected.

(9) Security data information

Provides security information about the abnormal states detected by the meter in the form of security data that identifies the abnormal states by means of bit assignment.

| | Char1 | Char2 | Char3 | Char4 | Char5 | | Char10 |
|---|---|---|---|---|---|---|---|
| Bit1 | Arr01 | Arr09 | Arr17 | Arr25 | Arr33 | | Arr73 |
| Bit2 | Arr02 | Arr10 | Arr18 | Arr26 | Arr34 | | Arr74 |
| Bit3 | Arr03 | Arr11 | Arr19 | Arr27 | Arr35 | | Arr75 |
| Bit4 | Arr04 | Arr12 | Arr20 | Arr28 | Arr36 | ・・・ | Arr76 |
| Bit5 | Arr05 | Arr13 | Arr21 | Arr29 | Arr37 | | Arr78 |
| Bit6 | Arr06 | Arr14 | Arr22 | Arr30 | Arr38 | | Arr77 |
| Bit7 | Arr07 | Arr15 | Arr23 | Arr31 | Arr39 | | Arr79 |
| Bit8 | Arr08 | Arr16 | Arr24 | Arr32 | Arr40 | | Arr80 |

"Arr" refers to "alarm information."

(10) Valve closure by the Center

This property indicates whether the Center has closed the gas shutoff valve of the meter. When the value of this property is "0x41"(= Center has closed the valve), no request to reopen the valve is accepted until the value for the "Permission has been given by the Center to reopen the gas shutoff valve closed by the Center" state (0x41) is received in the "Permission from the Center to reopen



© 2000 - 2023 ECHONET Consortium

the valve closed by the Center" property.

(11) Permission from the Center to reopen the valve closed by the Center

This property indicates whether permission has been given by the Center to reopen the gas shutoff valve of the meter closed by the Center. The value "0x41" indicates that permission has been given by the Center to reopen the gas shutoff valve closed by the Center, and the value "0x42" indicates that permission to reopen the gas shutoff valve closed by the Center has not been given by the Center.

(12) Emergency closure of shutoff valve

This property indicates whether the gas shutoff valve of the meter has been closed in response to an emergency. The value "0x41" indicates that emergency closure of the shutoff valve has occurred and the value "0x42" indicates that no emergency closure of the shutoff valve has occurred.

(13) Shutoff valve status

This property indicates whether the shutoff valve is open or closed. The value "0x41" indicates that the shutoff valve is open and the value "0x42" indicates that the shutoff valve is closed.

(14) Historical data of shutoff reasons

This property indicates the reasons for the 3 past shutoff valve-based gas shutoffs by means of bit assignment with one byte used for each of the 3 shutoff reasons. The higher-order, intermediate-order and lower-order bytes shall contain Historical data 3 (the reason for the shutoff before the shutoff before the last shutoff), Historical data 2 (the reason for the shutoff before the last shutoff) and Historical data 1 (the reason for the last shutoff), respectively.

(15) ID number setting

This property indicates the ID number of the meter. The ID number shall be a 6-digit code comprised of 6 one-byte alphanumeric characters.

ID numbers are used when there are two or more meters.

(16) Verification expiration setting

When the meter is one that has been verified by a verifying organization, this property indicates the year and month in which the verification of the meter will expire.

(17) Measured cumulative gas consumption information with date and time

This property indicates the cumulative gas consumption and the date and time of measurement in the format of 4 bytes for date of measurement, 3 bytes for time of measurement, and 4 byes for cumulative gas consumption. The date of measurement shall be indicated in the format of two



© 2000 - 2023 ECHONET Consortium

bytes for year, one byte for month, and one byte for day. The time of measurement shall be indicated in the format of one byte for hour, one byte for minute, and one byte for second. If the meter has no second information, 0x00 shall be set for second.

Cumulative gas consumption shall follow the definition in (4) "Measured cumulative gas consumption."

(18) Historical information of cumulative gas consumption

This property indicates the historical information of gas consumption measured at every hour in the format of 4 bytes for the date of history start, 3 bytes for the time of history start, 4 bytes × 24 for historical data of measured cumulative gas consumption, 4 bytes for cumulative gas consumption at history start, and 2 bytes for cumulative time interval.

The date of history start shall be indicated in the format of two bytes for year, one byte for month, and one byte for day. The time of history start shall be indicated in the format of one byte for hour, one byte for minute, and one byte for second. If the meter has no second information, 0x00 shall be set for second.

Historical data of measured cumulative gas consumption indicates the gas consumption (unit: 0.001m3) at every cumulative interval using a 5-digit decimal notation number. The value range of the property shall be from 0x00000 to 0xF423F (0 to 99.999m3).

Cumulative gas consumption at history start shall follow the definition in (4) "Measured cumulative gas consumption."

The value range of cumulative time interval shall be 0x0001 to 0xFFFF (1 to 65535 minutes).

Example:

Sending 24 cumulative values (reading increment at every hour) from 00:00:00 on March 1, 2012 (reading: 123,456.789m$^3$) after 00:00:00 on March 2

Date of history start (YYYY:MM:DD) =0x07DC0301(2012:03:01)

Time of history start (hh:mm:ss) = 0x000000(00:00:00)

Historical data of measured cumulative gas consumption = See the table below (24 from Vol.01 to Vol.24)

Cumulative gas consumption at history start = 0x075BCD15 (123,456.789 m$^3$)

Cumulative time interval = 0x3C (60 minutes)

Supplement) Historical data of measured cumulative gas consumption (example) corresponding to the transition of cumulative gas consumption

| No. | Year and month | Time | Reading | Historical data of measured cumulative gas consumption Vol. 01-24 |
|---|---|---|---|---|
| | 20120301 | 000000 | 123456789 | |
| 01 | 20120301 | 010000 | 123456799 | 00010 (=123456799-123456789) |



© 2000 - 2023 ECHONET Consortium

| | | | | | |
|---|---|---|---|---|---|
| 02 | 20120301 | 020000 | 123456819 | 00020 | (=123456819-123456799) |
| 03 | 20120301 | 030000 | 123456849 | 00030 | (=123456849-123456819) |
| 04 | 20120301 | 040000 | 123456889 | 00040 | (=123456889-123456849) |
| ・<br>・<br>・ | ・<br>・<br>・ | ・<br>・<br>・ | ・<br>・<br>・ | ・<br>・<br>・ | |
| 21 | 20120301 | 210000 | 123461234 | 01000 | (=123461234-123460234) |
| 22 | 20120301 | 220000 | 123461756 | 00522 | (=123461756-123461234) |
| 23 | 20120301 | 230000 | 123461756 | 00000 | (=123461756-123461756) |
| 24 | 20120302 | 000000 | 123461756 | 00000 | (=123461756-123461756) |



© 2000 - 2023 ECHONET Consortium

# 3．3．27 Requirements for high-voltage smart electric energy meter class

Class group code : 0x02

Class code : 0x8A

Instance code : 0x01–0x7F (0x00: All-instance specification code)

| Property name | EPC | Contents of property<br>Value range (decimal notation) | Data type | Data size | Unit | Access rule | Man-datory | Announcement at status change | Remark |
|---|---|---|---|---|---|---|---|---|---|
| Operation status | 0x80 | This property indicates the ON/OFF status.<br>ON=0x30, OFF=0x31 | unsigned char | 1 byte | — | Set<br>Get | <br>○ | ○ | |
| Coefficient | 0xD3 | This property indicates the coefficient for converting meter readings to actual kWh, kVarh and kW usage in 6-digit decimal notation.<br>0x00000000-0x000F423F<br>(000000-999999) | unsigned long | 4bytes | | Get | ○ | | |
| Multiplying factor for coefficient | 0xD4 | This property indicates the multiplying factor for coefficient.<br>0x00: ×1<br>0x01: ×0.1<br>0x02: ×0.01<br>0x03: ×0.001 | unsigned char | 1 byte | | Get | ○ | | |
| Fixed date | 0xE0 | This property indicates the fixed date for monthly usage, etc.<br>0x01-0x1F (1-31) | unsigned char | 1 byte | | Get | ○ | | |
| Day for which the historical data of measured cumulative amount of electric energy is to be retrieved | 0xE1 | This property indicates the day for which the historical data of measured cumulative amount of electric energy is to be retrieved (consisting of 48 items of half-hourly data for the preceding 24 hours) is to be retrieved.<br>0x00-0x63: (0-99)<br>0: current day 1-99: days ago | unsigned char | 1 byte | | Set/ Get | ○ | | |
| Measured cumulative amount of active electric energy | 0xE2 | This property indicates the measured cumulative amount of active electric energy at the most recent measurement time using a maximum of 8 digits in decimal notation. Indicates the measurement date in 4 bytes, measurement time in 3 bytes, and cumulative amount of active electric energy in 4 bytes.<br>・Measurement date YYYY:MM:DD<br>・Measurement time hh:mm:ss<br>・Cumulative amount of active electric energy Max. 8 digits in decimal notation | unsigned short ＋ unsigned char × 2 ＋ unsigned char × 3 ＋ unsigned long | 11 bytes | year, month, day, hour minute, second and kWh | Get | ○ | | |



© 2000 - 2023 ECHONET Consortium

| | | | | | | | | | |
|---|---|---|---|---|---|---|---|---|---|
| | | 1st-4th bytes: measurement date<br>YYYY: 0x0001-0x270F<br>(1-9999)<br>MM: 0x01-0x0C (1-12)<br>DD: 0x01-0x1F (1-31)<br>5th-7th bytes: measurement time<br>hh: 0x00-0x17 (0-23)<br>mm: 0x00-0x3B (0-59)<br>ss: 0x00-0x3B (0-59)<br>8th-11th bytes: Cumulative amount of active electric energy<br>0x00000000-0x05F5E0FF<br>(0-99,999,999) | | | | | | | |
| Cumulative amount of electric energy at fixed time | 0xE3 | This property indicates the most recent cumulative amount of active electric energy measured at 30-minute intervals held by the meter with the measurement date in 4 bytes, measurement time in 3 bytes, and cumulative amount of active electric energy in 4 bytes.<br>Measurement date YYYY:MM:DD<br>Measurement time hh:mm:ss<br>Cumulative active electric energy: an 8-digit decimal notation number<br>1st-4th bytes: measurement date<br>YYYY: 0x0001-0x270F<br>(1-9999)<br>MM: 0x01-0x0C (1-12)<br>DD: 0x01-0x1F (1-31)<br>5th-7th bytes: measurement time<br>hh: 0x00-0x17 (0-23)<br>mm: 0x00-0x3B (0-59)<br>ss: 0x00-0x3B (0-59)<br>8th-11th bytes: Cumulative amount of active electric energy<br>0x00000000-0x05F5E0FF<br>(0-99,999,999) | unsigned short + unsigned char × 2 + unsigned char × 3 + unsigned long | 11 bytes | year, month, day, hour minute, second and kWh | Get | ○ | | |
| Measurement data of cumulative amount of active electric energy for power factor measurement | 0xE4 | This property indicates the measurement data of cumulative amount of active electric energy for power factor measurement at the most recent measurement time, with the measurement date in 4 bytes, measurement time in 3 bytes, and cumulative amount of active electric energy in 4 bytes.<br>・Measurement date YYYY: MM: DD<br>・Measurement time hh: mm: ss<br>・Cumulative amount of active electric energy Max. 8 digits in decimal notation | unsigned short + unsigned char × 2 + unsigned char × 3 + unsigned long | 11 bytes | year, month, day, hour minute, second and kWh | Get | | | |



© 2000 - 2023 ECHONET Consortium

| | | | | | | | | | |
|---|---|---|---|---|---|---|---|---|---|
| | | 1st-4th bytes: measurement date<br>YYYY: 0x0001-0x270F<br>(1-9999)<br>MM: 0x01-0x0C (1-12)<br>DD: 0x01-0x1F (1-31)<br>5th-7th bytes: measurement time<br>hh: 0x00-0x17 (0-23)<br>mm: 0x00-0x3B (0-59)<br>ss: 0x00-0x3B (0-59)<br>8th-11th bytes: Cumulative amount of active electric energy<br>0x00000000-0x05F5E0FF<br>(0-99,999,999) | | | | | | | |
| Number of effective digits for cumulative amount of active electric energy | 0xE5 | This property indicates the number of effective digits for cumulative amount of electric energy.<br>0x01-0x08<br>(1-8) | unsigned char | 1 byte | digit | Get | ○ | | |
| Unit for cumulative amount of electric energy | 0xE6 | This property indicates the unit for measured cumulative active electric energy and historical data (multiplying factors).<br>0x00: 1kWh<br>0x01: 0.1kWh<br>0x02: 0.01kWh<br>0x03: 0.001kWh<br>0x04: 0.0001kWh<br>0x0A: 10kWh<br>0x0B: 100kWh<br>0x0C: 1000kWh<br>0x0D: 10000kWh | unsigned char | 1 byte | | Get | ○ | | |
| Historical data of measured cumulative amount of active electric energy | 0xE7 | This property indicates the historical data of measured cumulative amount of active electric energy on the retrieval day specified under “day for which the historical data of measured cumulative amount of electric energy is to be retrieved”, equaling 48 pieces of half-hourly data for 24 hours (00:00-23:30) of the day by time series from the highest-order byte.<br>1st-2nd bytes: Day for which the historical data of measured cumulative amount of electric energy is to be retrieved<br>0x0000-0x0063 (0-99):<br>3rd and succeeding bytes: Measured cumulative amount of active electric energy 0x00000000-0x05F5E0FF<br>(0-99,999,999) | unsigned short<br>＋<br>unsigned long<br>×48 | 194 bytes | kWh | Get | ○ | | |
| Monthly maximum electric power demand | 0xC1 | This property indicates the maximum value of meter readings for electric power demand recorded between the date of the last fixed reading and the most recent measurement time.<br>0x00000000-0x05F5E0FF<br>(0-99,999,999) | unsigned long | 4 bytes | kW | Get | ○ | | |



© 2000 - 2023 ECHONET Consortium

| | | | | | | | | | |
|---|---|---|---|---|---|---|---|---|---|
| Cumulative maximum electric power demand | 0xC2 | This property indicates the cumulative value of meter readings for maximum electric power demand contractually fixed by the electric power company.<br>0x00000000-0x05F5E0FF<br>(0-99,999,999) | unsigned long | 4 bytes | kW | Get | | | |
| Electric power demand at fixed time<br>(30-minute average electric power) | 0xC3 | This property indicates the meter reading for electric power demand (30-minute average electric power) in the most recent half-hourly measurement time, with the measurement date in 4 bytes, measurement time in 3 bytes, and electric power demand (30-minute average electric power) in 4 bytes.<br>・Measurement date YYYY: MM: DD<br>・Measurement time hh: mm: ss<br>・Electric power demand Max. 8 digits in decimal notation<br>1st-4th bytes: Measurement date<br>YYYY: 0x0001-0x270F<br>(1-9999)<br>MM: 0x01-0x0C (1-12)<br>DD: 0x01-0x1F (1-31)<br>5th-7th bytes: Measurement time<br>hh: 0x00-0x17 (0-23)<br>mm: 0x00-0x3B (0-59)<br>ss: 0x00-0x3B (0-59)<br>8th-11th bytes: Electric power demand<br>0x00000000-0x05F5E0FF<br>(0-99,999,999) | unsigned short<br>＋<br>unsigned char × 2<br>＋<br>unsigned char × 3<br>＋<br>unsigned long | 11 bytes | year, month, day, hour minute, second and kW | Get | ○ | | |
| Number of effective digits of electric power demand | 0xC4 | This property indicates the number of effective digits of electric power demand.<br>0x01-0x08<br>(1-8) | unsigned char | 1 byte | digit | Get | ○ | | |
| Unit of electric power demand | 0xC5 | This property indicates the unit for the monthly maximum electric power demand, and the electric power demand at fixed time (30-minute average electric power).<br>0x00: 1kW<br>0x01: 0.1kW<br>0x02: 0.01kW<br>0x03: 0.001kW<br>0x04: 0.0001kW<br>0x0A: 10kW<br>0x0B: 100kW<br>0x0C: 1000kW<br>0x0D: 10000kW | unsigned char | 1 byte | | Get | ○ | | |



© 2000 - 2023 ECHONET Consortium

| | | | | | | | | | |
|---|---|---|---|---|---|---|---|---|---|
| Historical data of measured electric power demand | 0xC6 | This property indicates historical data of meter readings for electric power demand at fixed time (30-minute average electric power) on the day specified under “Day for which the historical data of measured cumulative amount of electric energy is to be retrieved”, equaling 48 pieces of half-hourly data for 24 hours (00:00-23:30) of the day by time series from the highest-order byte.<br>1st-2nd bytes: day for which the historical data of measured cumulative amount of electric energy is to be retrieved 0x0000-0x0063 (0-99)<br>3rd and succeeding bytes: electric power demand 0x00000000-0x05F5E0FF<br>(0-99,999,999) | unsigned short ＋ unsigned long × 48 | 194 bytes | kW | Get | ○ | | |
| Unit of cumulative maximum electric power demand | 0xC7 | This property indicates the unit of cumulative maximum electric power demand.<br>0x00：1kW<br>0x01：0.1kW<br>0x02：0.01kW<br>0x03：0.001kW<br>0x04：0.0001kW<br>0x0A：10kW<br>0x0B：100kW<br>0x0C：1000kW<br>0x0D：10000kW | unsigned char | 1 byte | | Get | | | |
| Measurement data of reactive electric energy consumption (lag) for power factor measurement | 0xCA | This property indicates the measurement data of reactive electric energy consumption (lag) for power factor measurement at the most recent measurement time, with the measurement date in 4 bytes, measurement time in 3 bytes, and cumulative amount of reactive electric energy consumption in 4 bytes.<br>・Measurement date YYYY: MM: DD<br>・Measurement time hh: mm: ss<br>・Cumulative amount of reactive electric energy consumption (lag) Max. 8 digits in decimal notation<br>1st-4th bytes: Measurement date<br>YYYY: 0x0001-0x270F (1-9999)<br>MM: 0x01-0x0C (1-12)<br>DD: 0x01-0x1F (1-31)<br>5th-7th bytes: Measurement time<br>hh: 0x00-0x17 (0-23)<br>mm: 0x00-0x3B (0-59)<br>ss: 0x00-0x3B (0-59)<br>8th-11th bytes: Cumulative amount of reactive electric energy consumption (lag)<br>0x00000000-0x05F5E0FF (0-99,999,999) | unsigned short ＋ unsigned char × 2 ＋ unsigned char × 3 ＋ unsigned long | 11 bytes | year, month, day, hour minute, second and kVarh | Get | | | |



© 2000 - 2023 ECHONET Consortium

| | | | | | | | | | |
|---|---|---|---|---|---|---|---|---|---|
| Measurement data of cumulative amount of reactive electric energy consumption (lag) at fixed time for power factor measurement | 0xCB | This property indicates the measurement data of cumulative amount of reactive electric energy for power factor measurement at the most recent half-hourly measurement time, with the measurement date in 4 bytes, measurement time in 3 bytes, and cumulative amount of reactive electric energy consumption in 4 bytes.<br>・Measurement date YYYY: MM: DD<br>・Measurement time hh: mm: ss<br>・Cumulative amount of reactive electric energy consumption (lag) Max.8 digits in decimal notation<br>1st-4th bytes: Measurement date<br>YYYY: 0x0001-0x270F (1-9999)<br>MM: 0x01-0x0C (1-12)<br>DD: 0x01-0x1F (1-31)<br>5th-7th bytes: Measurement time<br>hh: 0x00-0x17 (0-23)<br>mm: 0x00-0x3B (0-59)<br>ss: 0x00-0x3B (0-59)<br>8th-11th bytes: Cumulative amount of reactive electric energy consumption (lag)<br>0x00000000-0x05F5E0FF (0-99,999,999) | unsigned short + unsigned char × 2 + unsigned char × 3 + unsigned long | 11 bytes | year, month, day, hour minute, second and kVarh | Get | | | |
| Number of effective digits for measurement data of cumulative amount of reactive electric energy consumption (lag) for power factor measurement | 0xCC | This property indicates the number of effective digits of measured data of cumulative amount of reactive electric energy consumption (lag) for power factor measurement.<br>0x01-0x08<br>(1-8) | unsigned char | 1 byte | digit | Get | | | |
| Unit of measurement data of cumulative amount of reactive electric energy consumption (lag) for power factor | 0xCD | This property indicates the unit (multiplying factor) for measurement data of cumulative amount of reactive electric energy consumption (lag) and historical data.<br>0x00: 1kVarh<br>0x01: 0.1kVarh<br>0x02: 0.01kVarh<br>0x03: 0.001kVarh<br>0x04: 0.0001kVarh<br>0x0A: 10kVarh<br>0x0B: 100kVarh<br>0x0C: 1000kVarh<br>0x0D: 10000kVarh | unsigned char | 1 byte | | Get | | | |



© 2000 - 2023 ECHONET Consortium

| | | | | | | | | | |
|---|---|---|---|---|---|---|---|---|---|
| Historical data of measurement data of cumulative amount of reactive electric energy consumption(lag) for power factor measurement | 0xCE | This property indicates historical data for cumulative amount of reactive electric energy consumption (lag) measurements at fixed time on the day specified under "Day for which the historical data of measured cumulative amount of electric energy is to be retrieved", equaling 48 pieces of half-hourly data for 24 hours (00:00-23:30) of the day by time series from the highest-order byte.<br>1st- 2nd bytes: Day for which the historical data of measured cumulative amount of electric energy is to be retrieved<br>0x0000-0x0063 (0-99)<br>3rd and succeeding bytes: measurement data of cumulative amount of reactive electric energy consumption(lag)<br>0x00000000-0x05F5E0FF(0-99,999,999) | unsigned short ＋ unsigned long × 48 | 194 bytes | kVarh | Get | | | |

Note: In the "Announcement at status change" column, ○ denotes mandatory processing when the property is implemented.

This class is used in the case of smart electric energy meters installed for users supplied with power of 6.6kV.

In the case of smart electric energy meters installed for users supplied with 400V or less, the low - voltage smart electric energy meter class (Class group code: 0x02, Class code: 0x88) shall be used.

(1) Operation status

This property indicates whether the functions specific to this class are operating (ON) or not (OFF). In the case of a node in which this class is implemented and the functions specific to this class start operating upon startup of the node, this property may be implemented with the value fixed at 0x30 (operation status ON).

(2) Coefficient

This property indicates the coefficient in 6-digit decimal notation. The coefficient multiplied by the multiplying factor for the coefficient shall be used as the value for converting meter readings to actually used kWh, kVarh or kW.

(3) Multiplying factor for coefficient

This property indicates the multiplying factor for the coefficient. Meter readings can be converted to actually used kWh, kVarh or kW by multiplying by the coefficient and the multiplying factor for the coefficient.

With a 6.6kV supply, meters cannot be connected directly to power supply circuits. In such cases, electric energy and others are measured by means of a voltage transformer (VT) and



© 2000 - 2023 ECHONET Consortium

current transformer (CT). Meter readings taken using a voltage transformer and current transformer are converted to primary side measured values representing actual usage, etc., by multiplying by the coefficient and the multiplying factor for the coefficient.

(Example)

Coefficient = 0x00000001 (1)

Multiplying factor for coefficient = 0x00 (1)

Measured cumulative amount of active electric energy (EPC=0xE2): 0x00BC614E (12345678)

Unit for cumulative amount of active electric energy (EPC=0xE6): 0x01 (0.1kWh)

In this case, the primary side measured value (actual usage) will be:

Measured cumulative amount of active electric energy × coefficient × multiplying factor for coefficient × Unit for cumulative amount of active electric energy

= 12345678 × 1 × 1 × 0.1kWh = 1234567.8kWh

(4) Fixed date

This property indicates the fixed date of monthly usage, etc., as 0x01-0x1F (1-31). If the fixed date is the 10th, the value will be 0x0A (10).

(5) Day for which the historical data of measured cumulative amount of electric energy is to be retrieved

This property specifies the day for which the historical data of measured cumulative amount of active electric energy (EPC=0xE7), historical data of measured electric power demand (EPC=0xC6) , and cumulative amount of reactive electric energy (lag) (EPC=0xCE) is to be retrieved. The value range is from 0x00 to 0x63 (from 0 to 99).

0x00 (0): measured historical data for the current day (up to the last hour)

0x63 (99): measured historical data for the day that precedes the current day by 99 days

The default values of this property shall be 0xFF.

(6) Measured cumulative amount of active electric energy

This property indicates the measured cumulative amount of active electric energy in the order of measurement date in 4 bytes, measurement time in 3 bytes, and cumulative amount of active electric energy in 4 bytes. The measurement date is indicated using 2 bytes for the year, 1 byte for the month, and 1 byte for the day. The measurement time is indicated using 1 byte for hours, 1 byte for minutes, and 1 byte for seconds. If the meter does not have information on seconds as a unit of measured time, 0x00 is set for seconds. The cumulative amount of active electric energy is indicated using a maximum of 8 digits in decimal notation, with units indicated by property values of the unit for cumulative amount of active electric energy (EPC=0xE6). Measurements are multiplied by the coefficient (EPC=0xD3) and multiplying factor for



© 2000 - 2023 ECHONET Consortium

coefficient (EPC=0xD4) to produce the actual usage.

The property value range is 0x00000000-0x05F5E0FF (0-99,999,999). If the cumulative amount of active electric energy exceeds the number of effective digits specified under " Number of effective digits for cumulative amount of active electric energy" (EPC=0xE5), the number shall be incremented again from 0x00000000 (0). The value shall be set to 0xFFFFFFFE (no measured data) in the case of no cumulative amount of active electric energy.

(Example)

Measured cumulative amount of active electric energy = 0x00BC614E (12345678)

Coefficient (EPC=0xD3): 0x00000001 (1)

Multiplying factor for Coefficient (EPC=0xD4): 0x00 (1)

Unit for cumulative amount of electric energy (EPC=0xE6): 0x01 (0.1kWh)

In this case, the primary side measured value (actual usage) will be:

Measured cumulative amount of active electric energy × coefficient × multiplying factor for multiple × unit for cumulative amount of electric energy

= 12345678 × 1 × 1 × 0.1kWh = 1234567.8kWh

(7) Cumulative amount of electric energy at fixed time

This property indicates cumulative amount of electric energy measured at 30-minute intervals(Every hour on the hour and on the half hour). This property indicates the cumulative amount of active electric energy at the most recent scheduled measurement time retained by the meter, in the order of measurement date in 4 bytes, measurement time in 3 bytes, and cumulative amount of active electric energy in 4 bytes. The measurement date is indicated using 2 bytes for the year, 1 byte for the month, and 1 byte for the day. The measurement time is indicated using 1 byte for hours, 1 byte for minutes, and 1 byte for seconds. If the meter does not have information on seconds as a unit of measured time, 0x00 is set for seconds. The cumulative amount of active electric energy is indicated using a maximum of 8 digits in decimal notation, with units indicated by property values of the unit for cumulative amount of electric energy (EPC=0xE6). Measurements are multiplied by the coefficient (EPC=0xD3) and multiplying factor for coefficient(EPC=0xD4) to produce the actual usage.

The property value range is 0x00000000-0x05F5E0FF (0-99,999,999). If the cumulative amount of active electric energy exceeds the number of effective digits specified under " Number of effective digits for cumulative amount of active electric energy" (EPC=0xE5), the number shall be incremented again from 0x00000000 (0). The value shall be set to 0xFFFFFFFE (no measured data) in the case of no cumulative amount of active electric energy.

(Example)

Cumulative amount of electric energy at fixed time

・YYYY = 0x07DE (2014), MM = 0x04 (April), DD = 0x01 (1st)

・hh = 0x0A (hour:10), mm = 0x1E (minute:30), ss = 0x00 (second:00)

・Cumulative amount of active electric energy = 0x00BC614E (12345678)



© 2000 - 2023 ECHONET Consortium

Coefficient (EPC=0xD3): 0x00000001 (1)

Multiplying factor for coefficient (EPC=0xD4): 0x00 (1)

unit for cumulative amount of electric energy (EPC=0xE6): 0x01 (0.1kWh)

In this case,

Measurement date April 1, 2014

Measurement time 10:30:00

Cumulative amount of active electric energy (primary side measured value (actual usage))

Cumulative amount of electric energy at fixed time × coefficient × multiplying factor for coefficient ×unit for cumulative amount of electric energy

= 12345678 × 1 × 1 × 0.1kWh = 1234567.8kWh

(8) Measurement data of cumulative amount of active electric energy for power factor measurement

This property indicates the measurement data of cumulative amount of electric energy for power factor measurement, in the order of measurement date in 4 bytes, measurement time in 3 bytes, and cumulative amount of active electric energy in 4 bytes. The measurement date is indicated using 2 bytes for the year, 1 byte for the month, and 1 byte for the day. The measurement time is indicated using 1 byte for hours, 1 byte for minutes, and 1 byte for seconds. If the meter does not have information on seconds as a unit of measured time, 0x00 is set for seconds. The cumulative amount of active electric energy is indicated using a maximum of 8 digits in decimal notation, with units indicated by property values of the unit for cumulative amount of electric energy (EPC=0xE6). Measurements are multiplied by the coefficient (EPC=0xD3) and multiplying factor for coefficient (EPC=0xD4) to produce the actual usage.

Note "Cumulative amount of active electric energy for power factor measurement" is the cumulative amount of active electric energy in daytime (e.g., 8:00 to 22:00 in a day).

The property value range is 0x00000000-0x05F5E0FF (0-99,999,999). If the cumulative amount of active electric energy exceeds the number of effective digits specified under “ Number of effective digits for cumulative amount of active electric energy” (EPC=0xE5), the number shall be incremented again from 0x00000000 (0). The value shall be set to 0xFFFFFFFE (no measured data) in the case of no cumulative amount of active electric energy.

(Example)

Measurement data of cumulative amount of active electric energy for power factor measurement= 0x00BC614E (12345678)

Coefficient (EPC=0xD3): 0x00000001 (1)

Multiplying factor for coefficient (EPC=0xD4): 0x00 (1)

Unit for cumulative amount of electric energy (EPC=0xE6): 0x01 (0.1kWh)

In this case, the primary side measured value (actual usage) will be:

Measurement data of cumulative amount of active electric energy for power factor



© 2000 - 2023 ECHONET Consortium

measurement × coefficient × multiplying factor for coefficient × unit for cumulative amount of electric energy

= 12345678 × 1 × 1 × 0.1kWh = 1234567.8kWh

(9) Number of effective digits for cumulative amount of active electric energy

This property indicates the number of effective digits (effective digit count) for the data size of measured cumulative amount of electric energy (4 bytes: as a digit count, 8 digits), from the lower order side within these.

(Example)

Number of effective digits for cumulative amount of active electric energy is 0x06 (6 digits from the lower order side)

Cumulative amount of active electric energy overflows at 0x000F423F (999999), and increments again from 0x00000000 (0).

(10) Unit for cumulative amount of electric energy

This property indicates units of measured cumulative amount of electric energy and historical data.

| Property values | Unit for cumulative amount of electric energy (multiplying factor) |
|---|---|
| 0x00 | 1kWh |
| 0x01 | 0.1kWh |
| 0x02 | 0.01kWh |
| 0x03 | 0.001kWh |
| 0x04 | 0.0001kWh |
| 0x0A | 10kWh |
| 0x0B | 100kWh |
| 0x0C | 1000kWh |
| 0x0D | 10000kWh |

(11) Historical data of measured cumulative amount of active electric energy

This property indicates the historical data of measured cumulative amount of electric energy on the retrieval day specified under “Day for which the historical data of measured cumulative amount of electric energy is to be retrieved” (Day for which the historical data of measured cumulative amount of electric energy is to be retrieved 1 (EPC = 0xE1) indicated in 2 bytes), equaling 48 pieces of half-hourly data for 24 hours (00:00-23:30) of the day by time series from the highest-order byte. The cumulative amount of active electric energy is indicated in a maximum of 8 digits in decimal notation, with units indicated by property values of the unit for cumulative amount of electric energy (EPC=0xE6). Measurements are multiplied by the



© 2000 - 2023 ECHONET Consortium

coefficient (EPC=0xD3) and multiplying factor for coefficient(EPC=0xD4) to produce the actual usage.

The property value range is 0x00000000-0x05F5E0FF (0-99,999,999). If the cumulative amount of active electric energy exceeds the number of effective digits specified under " Number of effective digits for cumulative amount of active electric energy" (EPC=0xE5), the number shall be incremented again from 0x00000000 (0). The value shall be set to 0xFFFFFFFE (no measured data) in the case of no cumulative amount of active electric energy at the time in question.

In the case of default values with no " Day for which the historical data of measured cumulative amount of electric energy is to be retrieved" (EPC=0xE1) set, the day for which the historical data of measured cumulative amount of electric energy is to be retrieved shall be set to 0x00FF and all half-hourly measurements of cumulative amount of electric energy shall be set to 0xFFFFFFFE.

(12) Monthly maximum electric power demand

This property indicates the maximum value of meter readings for electric power demand recorded every hour on the hour and on the half hour between the date of the last fixed reading and the most recent measurement time.

Monthly maximum electric power demand is indicated using a maximum of 8 digits in decimal notation, with units indicated by property values of the unit of electric power demand (EPC=0xC5). Measurements are multiplied by the coefficient (EPC=0xD3) and multiplying factor for coefficient(EPC=0xD4) to produce the actual usage. The property value range is 0x00000000-0x05F5E0FF (0-99,999,999). The value shall be set to 0xFFFFFFFE (no measured data) in the case of no monthly maximum electric power demand.

(Example)

Monthly maximum electric power demand = 0x00BC614E (12345678)

Coefficient (EPC=0xD3): 0x00000001 (1)

Multiplying factor for coefficient(EPC=0xD4): 0x00 (1)

Unit of electric power demand (EPC=0xC5): 0x01 (0.1kW)

In this case, the primary side measured value (actual usage) will be:

Monthly maximum electric power demand × coefficient × multiplying factor for coefficient × unit of electric power demand

= 12345678 × 1 × 1 × 0.1kW = 1234567.8kW

(13) Cumulative maximum electric power demand

This property indicates the cumulative value of meter readings for maximum electric power demand contractually fixed by the electric power company.

Cumulative maximum electric power demand is indicated using a maximum of 8 digits in decimal notation, with units indicated by property values of the unit of electric power demand (EPC=0xC5). Measurements are multiplied by the coefficient (EPC=0xD3) and multiplying



© 2000 - 2023 ECHONET Consortium

factor for coefficient (EPC=0xD4) to produce the actual usage. The property value range is 0x00000000-0x05F5E0FF (0-99,999,999). If the cumulative maximum electric power demand exceeds the number of effective digits specified under “Number of effective digits of electric power demand” (EPC=0xC4), the number shall be incremented again from 0x00000000 (0). The value shall be set to 0xFFFFFFFE (no measured data) in the case of no cumulative maximum electric power demand.

(Example)

Cumulative maximum electric power demand = 0x00BC614E (12345678)

Coefficient (EPC=0xD3): 0x00000001 (1)

Multiplying factor for coefficient (EPC=0xD4): 0x00 (1)

Unit of electric power demand (EPC=0xC5): 0x01 (0.1kW)

In this case, measurements of the primary side (actual usage) will be:

Cumulative maximum electric power demand × coefficient × multiplying factor for coefficient multiple × unit of electric power demand

= 12345678 × 1 × 1 × 0.1kW = 1234567.8kW

(14) Electric power demand at fixed time(30-minute average electric power)

Of meter readings for electric power demand (30-minute average electric power) every 30 minute at 00 minutes and 30 minutes, this property indicates electric power demand at the most recent scheduled measurement time retained by the meter, in the order of measurement date in 4 bytes, measurement time in 3 bytes, and electric power demand 4 bytes. The measurement date is indicated using 2 bytes for the year, 1 byte for the month, and 1 byte for the day. The measurement time is indicated using 1 byte for hours, 1 byte for minutes, and 1 byte for seconds. If the meter does not have information on seconds as a unit of measured time, 0x00 is set for seconds. Electric power demand is indicated using a maximum of 8 digits in decimal notation, with units indicated by property values of the unit of electric power demand (EPC=0xC5). Measurements are multiplied by the coefficient (EPC=0xD3) and multiplying factor for coefficient (EPC=0xD4) to produce the actual usage. The property value range is 0x00000000-0x05F5E0FF (0-99,999,999). The value shall be set to 0xFFFFFFFE (no measured data) in the case of no electric power demand.

(Example)

Electric power demand at fixed time (30-minute average electric power)

・YYYY = 0x07DE (2014), MM = 0x04 (April), DD = 0x01 (1st)

・hh = 0x0A (hour:10), mm = 0x1E (minute:30), ss = 0x00 (second:00 )

・Electric power demand = 0x00BC614E (12345678)

Coefficient (EPC=0xD3): 0x00000001 (1)

Multiplying factor for coefficient (EPC=0xD4): 0x00 (1)

Unit of electric power demand (EPC=0xC5): 0x01 (0.1kW)

In this case,



© 2000 - 2023 ECHONET Consortium

Measurement date April 1, 2014

Measurement time 10:30:00

Electric power demand (30-minute average electric power) (primary side measured value (actual usage))

Electric power demand at fixed time (30-minute average electric power) × coefficient × multiplying factor for coefficient × unit of electric power demand

= 12345678 × 1 × 1 × 0.1kW = 1234567.8kW

(15) Number of effective digits of electric power demand

This property indicates the number of effective digits (effective digit count) for the data size of monthly maximum electric power demand, cumulative maximum electric power demand, and electric power demand (30-minute average electric power) (4 bytes: as a digit count, 8 digits), from the lower order side within these.

(Example)

Number of effective digits for electric power demand 0x06

(6 digits from the lower order side)

Cumulative maximum electric power demand overflows at 0x000F423F (999999), and increments again from 0x00000000 (0).

(16) Unit of electric power demand

This property indicates units of monthly maximum electric power demand, cumulative maximum electric power demand, and electric power demand at fixed time (30-minute average electric power).

| Property values | Unit of measured electric power demand (multiple) |
|---|---|
| 0x00 | 1kW |
| 0x01 | 0.1kW |
| 0x02 | 0.01kW |
| 0x03 | 0.001kW |
| 0x04 | 0.0001kW |
| 0x0A | 10kW |
| 0x0B | 100kW |
| 0x0C | 1000kW |
| 0x0D | 10000kW |

(17) Historical data of measured electric power demand

This property indicates the day of historical data retrieval 0x0000 to 0x0063 (0 to 99) , specified under “ Day for which the historical data of measured cumulative amount of electric energy is to



© 2000 - 2023 ECHONET Consortium

be retrieved ” (EPC=0xE1) (Day for which the historical data of measured cumulative amount of electric energy is to be retrieved 1 (EPC = 0xE1) indicated in 2 bytes), and meter readings for scheduled electric power demand (30 minute average electric power) every 30 minutes at 00 and 30 minutes every hour for 24 hours (00:00 to 23:30) of the day, equaling 48 pieces of historical data, representing property values by time series from the highest-order byte.

Electric power demand is indicated using a maximum 8-digit decimal notation number, with units indicated by property values of the unit of electric power demand (EPC=0xC5). Measurements are multiplied by the coefficient (EPC=0xD3) and multiplying factor for coefficient (EPC=0xD4) to produce the actual usage.

The property value range is 0x00000000-0x05F5E0FF (0-99,999,999). The value shall be set to 0xFFFFFFFE (no measured data) in the case of no electric power demand at the time in question.

In the case of default values with no “ Day for which the historical data of measured cumulative amount of electric energy is to be retrieved” (EPC=0xE1) set, the day for which the historical data of measured cumulative amount of electric energy is to be retrieved shall be set to 0x00FF and electric power demand every 30 minutes at fixed time(30-minute average electric power) shall be set to 0xFFFFFFFE.

(18) Unit of cumulative maximum electric power demand

This property indicates units of cumulative maximum electric power demand.

| Property value | Unit of measured electric power demand (multiple) |
|---|---|
| 0x00 | 1kW |
| 0x01 | 0.1kW |
| 0x02 | 0.01kW |
| 0x03 | 0.001kW |
| 0x04 | 0.0001kW |
| 0x0A | 10kW |
| 0x0B | 100kW |
| 0x0C | 1000kW |
| 0x0D | 10000kW |

(19) Measurement data of reactive electric energy consumption (lag) for power factor measurement

This property indicates measurement data of reactive electric energy consumption (lag) for power factor measurement, in the order of measurement date in 4 bytes, measurement time in 3 bytes, and cumulative amount of reactive electric energy consumption in 4 bytes. The measurement date is indicated using 2 bytes for the year, 1 byte for the month, and 1 byte for the day. The measurement time is indicated using 1 byte for hours, 1 byte for minutes, and 1 byte



© 2000 - 2023 ECHONET Consortium

for seconds. If the meter does not have information on seconds as a unit of measured time, 0x00 is set for seconds. Reactive electric energy consumption is indicated using a maximum 8-digit decimal notation number, with units indicated by the property values of unit of measurement data for cumulative amount of reactive electric energy consumption (lag) (EPC=0xCD). Measurements are multiplied by the coefficient (EPC=0xD3) and multiplying factor for coefficient (EPC=0xD4) to produce the actual usage.

Note "Reactive electric energy consumption (lag) for power factor measurement" is the cumulative amount of reactive electric energy in daytime (e.g., 8:00 to 22:00 in a day).

The property value range is 0x00000000-0x05F5E0FF (0-99,999,999). If the cumulative amount of reactive electric energy consumption exceeds the number of effective digits specified under “Number of effective digits for measurement data of cumulative amount of reactive electric energy consumption (lag) for power factor measurement” (EPC=0xCC), the number shall be incremented again from 0x00000000 (0). The value shall be set to 0xFFFFFFFE (no measured data) in the case of no measurement data of cumulative amount of reactive electric energy consumption (lag) for power factor measurement.

(Example)

Measurement data of cumulative amount of reactive electric energy consumption (lag) for power factor measurement = 0x00BC614E (12345678)

Coefficient (EPC=0xD3): 0x00000001 (1)

Multiplying factor for coefficient (EPC=0xD4): 0x00 (1)

Unit of measurement data for cumulative amount of reactive electric energy consumption (lag) (EPC=0xCD): 0x01 (0.1kVarh)

In this case, the primary side measured value (actual usage) will be:

measurement data of cumulative amount of reactive electric energy consumption (lag) for power factor measurement × coefficient × multiplying factor for coefficient × unit of measurement data for cumulative amount of reactive electric energy consumption (lag)

= 12345678 × 1 × 1 × 0.1kVarh = 1234567.8kVarh

(20) Measurement data of cumulative amount of reactive electric energy consumption (lag) at fixed time for power factor measurement

Of measurement data of cumulative amount of reactive electric energy consumption (lag) at fixed time for power factor measurement every 30 minute at 00 and 30 minutes, this property indicates measurement data of cumulative amount of reactive electric energy consumption (lag) for power factor measurement at the most recent scheduled measurement time retained by the meter, in the order of measurement date in 4 bytes, measurement time in 3 bytes, and cumulative amount of reactive electric energy consumption in 4 bytes. The measurement date is indicated using 2 bytes for the year, 1 byte for the month, and 1 byte for the day. The measurement time is indicated using 1 byte for hours, 1 byte for minutes, and 1 byte for



© 2000 - 2023 ECHONET Consortium

seconds. If the meter does not have information on seconds as a unit of measured time, 0x00 is set for seconds. The cumulative amount of reactive electric energy consumption is indicated using a maximum 8-digit number in decimal notation, with units indicated by the property values of unit of measurement data of cumulative amount of reactive electric energy consumption (lag) for power factor measurement (EPC=0xCD). Measurements are multiplied by the coefficient (EPC=0xD3) and multiplying factor for coefficient (EPC=0xD4) to produce the actual usage.

The property value range is 0x00000000-0x05F5E0FF (0-99,999,999). If the cumulative amount of reactive electric energy consumption exceeds the number of effective digits specified under " Number of effective digits for measurement data of cumulative amount of reactive electric energy consumption (lag) for power factor measurement" (EPC=0xCC), the number shall be incremented again from 0x00000000 (0). The value shall be set to 0xFFFFFFFE (no measured data) in the case of no cumulative amount of reactive electric energy consumption (lag) for power factor measurement.

(Example)

Measurement data of reactive electric energy consumption (lag) at fixed time

・YYYY = 0x07DE (2014), MM = 0x04 (April), DD = 0x01 (1st)

・hh = 0x0A (hour:10 ), mm = 0x1E (minute:30), ss = 0x00 (second:00 )

・Cumulative amount of reactive electric energy consumption (lag) = 0x00BC614E (12345678)

Coefficient (EPC=0xD3): 0x00000001 (1)

Multiplying factor for coefficient (EPC=0xD4): 0x00 (1)

Unit of measurement data of cumulative amount of reactive electric energy consumption (lag) for power factor measurement (EPC=0xCD): 0x01 (0.1kWh)

In this case,

Measurement date April 1, 2014

Measurement time 10:30:00

Cumulative amount of reactive electric energy consumption (lag) (primary side measured value (actual usage)

Measurement data of reactive electric energy consumption (lag) at fixed time × coefficient × multiplying factor for coefficient × unit of measurement data of cumulative amount of reactive electric energy consumption (lag) for power factor measurement

= 12345678 × 1 × 1 × 0.1kVarh = 1234567.8kVarh

(21) Number of effective digits for measurement data of cumulative amount of reactive electric energy consumption (lag) for power factor measurement

This property indicates the number of effective digits (effective digit count) for the data size of measurement data of cumulative amount of reactive electric energy consumption (lag) (4 bytes: as a digit count, 8 digits), from the lower order side within these.



© 2000 - 2023 ECHONET Consortium

(Example)

Number of effective digits for cumulative amount of reactive electric energy consumption (lag) for power factor measurement 0x06 (6 digits from the lower order side)

Cumulative amount of reactive electric energy consumption (lag) for power factor measurement overflows at 0x000F423F(999999), and increments again from 0x00000000 (0).

(22) Unit of measurement data of cumulative amount of reactive electric energy consumption (lag)

This property indicates units of measurement data of cumulative amount of reactive electric energy consumption (lag).

| Property values | Unit of measurement data of cumulative amount of reactive electric energy consumption (lag) for power factor measurement (multiple) |
|---|---|
| 0x01 | 0.1kVarh |
| 0x02 | 0.01kVarh |
| 0x03 | 0.001kVarh |
| 0x04 | 0.0001kVarh |
| 0x0A | 10kVarh |
| 0x0B | 100kVarh |
| 0x0C | 1000kVarh |
| 0x0D | 10000kVarh |

(23) Historical data of measurement data of cumulative amount of reactive electric energy consumption (lag) for power factor measurement

This property indicates the day for which the historical data of measured 0x0000-0x0063 (0-99) specified under “Day for which the historical data of measured cumulative amount of electric energy is to be retrieved” (EPC=0xE1) (Day for which the historical data of measured cumulative amount of electric energy is to be retrieved 1 (EPC = 0xE1) indicated in 2 bytes) and measured data for cumulative amount of reactive electric energy consumption (lag) every 30 minute at 00 and 30 minutes past every hour, for 24 hours (00:00 to 23:30) of the day, equaling 48 pieces of historical data, representing property values by time series from the highest-order byte.

The cumulative amount of reactive electric energy consumption (lag) is indicated using a maximum 8-digit number in decimal notation. Units are indicated by the property values of the unit of measurement data of cumulative amount of reactive electric energy consumption (lag) (EPC=0xCD). Measurements are multiplied by the coefficient (EPC=0xD3) and multiplying factor for coefficient (EPC=0xD4) to produce the actual usage.

The property value range is 0x00000000-0x05F5E0FF (0-99,999,999). If the cumulative amount of reactive electric energy consumption exceeds the number of effective digits specified under



© 2000 - 2023 ECHONET Consortium

"Number of effective digits for measurement data of cumulative amount of reactive electric energy consumption (lag) for power factor measurement" (EPC=0xCC), the number shall be incremented again from 0x00000000 (0). The value shall be set to 0xFFFFFFFE (no measured data) in the case of no cumulative amount of reactive electric energy consumption (lag) at the time in question.

In the case of default values with no "Day for which the historical data of measured cumulative amount of electric energy is to be retrieved" (EPC=0xE1) set, the day for which the historical data of measured cumulative amount of electric energy is to be retrieved shall be set to 0x00FF and cumulative amount of reactive electric energy consumption (lag) every 30 minutes shall be set to 0xFFFFFFFE.



© 2000 - 2023 ECHONET Consortium

## 3. 3. 28 Requirements for kerosene meter class

Class group code : 0x02

Class code : 0x8B

Instance code : 0x01–0x7F (0x00: All-instance specification code)

| Property name | EPC | Contents of property | Data type | Data size | Unit | Access rule | Mandatory | Announcement at status change | No. |
|---|---|---|---|---|---|---|---|---|---|
| | | Value range (decimal notation) | | | | | | | |
| Operation status | 0x80 | This property indicates the ON/OFF status. | unsigned char | 1 byte | - | Set | | ○ | (1) |
| | | ON=0x30, OFF=0x31 | | | | Get | ○ | | |
| Measured cumulative amount of kerosene consumption | 0xE0 | This property indicates the cumulative amount of kerosene consumption in 0.1L. | unsigned long | 4 bytes | 0.1L | Get | ○ | | (2) |
| | | 0x00000000 to 0x3B9AC9FF (0 to 99,999,999.9L) | | | | | | | |
| History of measured cumulative amounts of kerosene consumption | 0xE2 | This property indicates the history of measured results of cumulative amounts of kerosene consumption for the past 24 hours in 30-minute sections. | unsigned long×48 | 192 bytes | 0.1L | Get | | | (3) |
| | | 0x00000000 to 0x3B9AC9FF (0 to 99,999,999.9L) | | | | | | | |

(1) Operation status (inherited from the device object super class property)

This property indicates whether the functions specific to this class are operating (ON) or not (OFF). In the case of a node in which this class is implemented and the functions specific to this class start operating upon startup of the node, this property may be implemented with the value fixed at 0x30 (operation status ON).

(2) Measured cumulative amount of kerosene consumption

This property indicates the cumulative amount of kerosene consumption in units of 0.1L. The property value range is 0x00000000 to 0x3B9AC9FF (0 to 99,999,999.9L). When the cumulative amount of kerosene consumption overflows, the property value shall be incremented again from 0x00000000.

(3) History of measured cumulative amounts of kerosene consumption

This property indicates the history of measured results of cumulative amounts of kerosene consumption (0.1L) for the past 24 hours in 30-minute sections. For the measured cumulative amounts of kerosene consumption for every 30 minutes, the measured value in 0.1L at each 0 minute and 30 minutes based on the time set in the property name “Current time setting” (EPC=0x97) shall be indicated in the range from 0x00000000 to 0x3B9AC9FF (0 to 99,999,999.9L). The property value shall begin with the high-order byte in time series. 0xFFFFFFFE shall be used in relation to time data in the history of measured



© 2000 - 2023 ECHONET Consortium

values when measurements were not made.



© 2000 - 2023 ECHONET Consortium

# 3．3．29 Requirements for smart kerosene meter class

Class group code :0x02

Class code :0x8C

Instance code :0x01–0x7F (0x00: All-instance specification code)

| Property name | EPC | Contents of property | Data type | Data size | Unit | Access rule | Mandatory | Announcement at status change | No. |
|---|---|---|---|---|---|---|---|---|---|
| | | Value range (decimal notation) | | | | | | | |
| Operation status | 0x80 | This property indicates the ON/OFF status. | unsigned char | 1 byte | — | Set | | ○ | (1) |
| | | ON=0x30, OFF=0x31 | | | | Get | ○ | | |
| Owner category setting | 0xE1 | This property indicates the category of the owner of the meter. | unsigned char | 1 byte | — | Set/Get | | | (2) |
| | | 0x30: Not specified<br>0x31: Kerosene sales<br>0x32: Private company<br>0x33: Individual | | | | | | | |
| Measured cumulative kerosene consumption | 0xE2 | This property indicates the cumulative amount of kerosene consumption in a 9-digit decimal notation. | unsigned long | 4 bytes | 0.001L | Get | ○* | | (3) |
| | | 0x00000000 to 0x3B9AC9FF<br>(0 to 999,999,999) | | | | | | | |
| Units for measured cumulative kerosene consumption | 0xE3 | This property indicates the units for the measured cumulative amount of kerosene consumption (0xE0) | unsigned char | 1 byte | — | Get | ○ | | (4) |
| | | 0x00: 1L<br>0x01: 0.1L<br>0x02: 0.01L<br>0x03: 0.001L<br>0x04: 0.0001L<br>0x05: 0.00001L<br>0x06: 0.000001L | | | | | | | |
| Historical information of cumulative kerosene consumption | 0xE4 | This property indicates the cumulative history collection date and the history of measurement results of cumulative amounts of kerosene consumption for the past 24 hours in 30-minute sections. | unsigned short + unsigned long×48 | 194 bytes | 0.001L | Get | | | (5) |
| | | 0x0000 to 0x0063 : 0x00000000 to 0x3B9AC9FF<br>(0 to 99) : (0 to 999,999,999) | | | | | | | |
| Collection date setting for history of cumulative kerosene consumption | 0xE5 | This property indicates the date on which data on history of measurement values from every 30 minutes was collected. | unsigned char | 1 byte | | Set/Get | | | (6) |
| | | 0x00 to 0x63<br>(0 to 99)<br>0: Current day<br>1-99: Number of days before | | | | | | | |
| Meter reading | | This property indicates the status in which the | | 1 | | | | | |



© 2000 - 2023 ECHONET Consortium

| | | | | | | | | | |
|---|---|---|---|---|---|---|---|---|---|
| data abnormality detection status | 0xE6 | meter detected an abnormality in the meter reading data.<br>Abnormality detected 0x41<br>No abnormality detected 0x42 | unsigned char | byte | — | Get | | | (7) |
| Security data information | 0xE7 | Provides safety information detected by the meter in the form of security data defined by bit assignment.<br>For details, see Explanation (8) | unsigned char×10 | 10 bytes | — | Get | | | (8) |
| Residual volume control warning level | 0xE8 | This property indicates a warning where residual volume is very small.<br>Residual volume control warning level 1 0x31<br>Residual volume control warning level 2 0x32<br>Residual volume control warning level 3 0x33<br>No residual volume control warning 0x42 | unsigned char | 1 byte | — | Get | | ○ | (9) |
| Residual volume control warning level 1 | 0xEA | Sets “Residual volume control warning level 1”.<br>0 to 0xFFFFFF (0 to 16,777,215) | unsigned char×3 | 3 bytes | L | Set/Get | | | (10) |
| Residual volume control warning level 2 | 0xEB | Sets “Residual volume control warning level 2”.<br>0 to 0xFFFFFF (0 to 16,777,215) | unsigned char×3 | 3 bytes | L | Set/Get | | | (11) |
| Residual volume control warning level 3 | 0xEC | Sets “Residual volume control warning level 3”.<br>0 to 0xFFFFFF (0 to 16,777,215) | unsigned char×3 | 3 bytes | L | Set/Get | | | (12) |
| Slight leak timer value (kerosene flow rate continuation) | 0xED | This property indicates the number of days on which kerosene flow rate is continued.<br>0 to 0xFD (0 to 253) (0 to 253 days) | unsigned char | 1 byte | Day | Get | | | (13) |
| ID number setting | 0xEE | This property indicates the ID number of the meter.<br>000000 to FFFFFF<br>(Initial value: ”000000”) | unsigned char | 6 bytes | | Set/Get | | | (14) |
| Verification expiration setting | 0xEF | This property indicates the month and year in which the verification of the meter will expire.<br>YYYYMM<br>YYYY (Year), MM (Month) | unsigned char | 6 bytes | | Set/Get | | | (15) |
| Measured cumulative kerosene consumption information with date and time | 0xD0 | This property indicates the cumulative kerosene consumption and the date and time of measurement.<br>・Date of measurement: YYYY:MM:DD<br>・Time of measurement: HH:MM:SS<br>・Cumulative kerosene consumption: 9 digits<br>1 to 4 bytes:<br>0 to 0x270f : 1 to 0x0C : 1 to 0x1F<br>(=0 to 9999):(=1 to 12):(=1 to 31)<br>5 to 7 bytes:<br>0 to 0x17 : 0 to 0x3B : 0 to 0x3B<br>(=0 to 23):(=0 to 59):(=0 to 59)<br>8 to 11 bytes:<br>0x00000000 to 0x3B9AC9FF<br>(0 to 999,999,999) | unsigned char×4 + unsigned char×3 + unsigned long | 11 bytes | Date + Time + 0.001L | Get | ○* | | (16) |



© 2000 - 2023 ECHONET Consortium

| | | | | | | | | | |
|---|---|---|---|---|---|---|---|---|---|
| Historical information of cumulative kerosene consumption | 0xD1 | This property indicates the historical information of kerosene consumption, the date and time of history start, index value at history start and cumulative time interval<br>・Date: YYYY:MM:DD<br>・Time: HH:MM:SS<br>・Historical data of kerosene consumption<br>・ Cumulative kerosene consumption at history start<br>・Cumulative time interval (5 digits, every minute)<br><br>1 to 4 bytes:<br>0 to 0x270f : 1 to 0x0C : 1 to 0x1F<br>(=0 to 9999):(=1 to 12):(=1 to 31)<br>5 to 7 bytes:<br>0 to 0x17 : 0 to 0x3B : 0 to 0x3B<br>(=0 to 23):(=0 to 59):(=0 to 59)<br>8 to 103 bytes:<br>0x00000000 to 0x0001869F×24)<br>(0 to 99.999L)×24<br>104 to 107 bytes:<br>0x00000000 to 0x3B9AC9FF)<br>(0 to 999,999,999)<br>108 to 109 bytes:<br>0x0001 to 0xFFFF<br>(1 to 65,535) | unsigned char×4<br>+<br>unsigned char×3<br>+<br>unsigned long×24<br>+<br>unsigned long<br>+<br>unsigned short | 109 bytes | Date<br>+<br>Time<br>+<br>0.001L<br>+<br>0.001L<br>+<br>Minute | Get | | | (17) |

(1) Operation status (inherited from the device object super class property)

This property indicates whether the function native to this class is operating or not (ON/OFF). In the node mounting this class, if the function of this class is started concurrently with the start of node operation, this property may be implemented at a fixed value of 0x30 (Operation status ON).

(2) Owner category setting

This property sets the owner of the device as an owner category.

(3) Measured cumulative kerosene consumption

This property indicates the cumulative amount of kerosene consumption in a 9-digit decimal notation. Units are indicated based on the property value for Units for measured cumulative kerosene consumption (EPC=0xE3).

When the Units for measured cumulative kerosene consumption (multiplying factor in relation to the measured cumulative kerosene consumption) is 0x00, the unit is 1L; when it is 0x01, the unit is 0.1L; when it is 0x02, the unit is 0.01L; when it is 0x03, the unit is 0.001L; when it is 0x04, the unit is 0.0001L; when it is 0x05, the unit is 0.00001L; and when it is 0x06, the unit is 0.000001L.

The property value range is 0x00000000 to 3B9AC9FF (0 to 999,999,999), and when the cumulative amount of kerosene consumption overflows, the property value shall be incremented again from



© 2000 - 2023 ECHONET Consortium

0x0000000.

Example:

When the measured cumulative kerosene consumption is 123456789, and the units for measured cumulative kerosene consumption is (0x03):

123456789×0.001L＝123456.789L (actual measured value)

Overflow: Incremented again from 0x00000000

No data: 0xFFFFFFFE

* EPC of 0xE2 (measured cumulative kerosene consumption) or 0xD0 (measured cumulative kerosene consumption information with date and time) is required.

(4) Units for measured cumulative kerosene consumption

This property indicates the units for the measured cumulative kerosene consumption.

| Property value | Cumulative kerosene consumption (multiplying factor) |
|---|---|
| 0x00 | 1L |
| 0x01 | 0.1L |
| 0x02 | 0.01L |
| 0x03 | 0.001L |
| 0x04 | 0.0001L |
| 0x05 | 0.00001L |
| 0x06 | 0.000001L |

(5) Historical information of cumulative kerosene consumption

The data 0x00 to 0x63 (0 to 99) set for Collection date setting for history of cumulative kerosene consumption (EPC=0x05), and the cumulative kerosene consumption (0.001L) on the set collection date of history of cumulative kerosene consumption are expressed in the form of data over the past 24 hours in 30-minute sections. The measured cumulative amount of kerosene consumption for every 30 minutes is the measured value in 0.001L at each 0 minute and 30 minutes based on the time set in the property name “Current time setting” (EPC=0x97) and is indicated in the range from 0x00000000 to 0x3B9AC9FF (0 to 999,999.999L). The property value shall begin with the high-order byte in time series.

(6) Collection date setting for history of cumulative kerosene consumption

The date on which historical information of cumulative kerosene consumption is summoned is set within a range from 0x00 to 0x63 (0 to 99).



© 2000 - 2023 ECHONET Consortium

0x00 (0) represents data for the current day (up to previous time limit value)

0x63 (99) represents data from 99 days ago

If there is no corresponding data, set 0xFF for the cumulative history collection date in Historical information of cumulative kerosene consumption (EPC=0xE4), and set 0xFFFFFFFE for all of the 30-minute values.

(7) Meter reading data abnormality detection status

This property indicates a status where an abnormality was detected in the meter reading data. 0x41 is used when an abnormality is detected, and 0x42 is used when no abnormality is detected.

(8) Security data information

Provides security information about the abnormal states detected by the meter in the form of security data that identifies the abnormal states by means of bit assignment.

| | Char1 | Char2 | Char3 | Char4 | Char5 | | Char10 |
|---|---|---|---|---|---|---|---|
| Bit1 | Arr01 | Arr09 | Arr17 | Arr25 | Arr33 | | Arr73 |
| Bit2 | Arr02 | Arr10 | Arr18 | Arr26 | Arr34 | | Arr74 |
| Bit3 | Arr03 | Arr11 | Arr19 | Arr27 | Arr35 | | Arr75 |
| Bit4 | Arr04 | Arr12 | Arr20 | Arr28 | Arr36 | ・・・ | Arr76 |
| Bit5 | Arr05 | Arr13 | Arr21 | Arr29 | Arr37 | | Arr77 |
| Bit6 | Arr06 | Arr14 | Arr22 | Arr30 | Arr38 | | Arr78 |
| Bit7 | Arr07 | Arr15 | Arr23 | Arr31 | Arr39 | | Arr79 |
| Bit8 | Arr08 | Arr16 | Arr24 | Arr32 | Arr40 | | Arr80 |
| Arr represents alarm information. | | | | | | | |

(9) Residual volume control warning level

Issues a warning to indicate that the residual volume is very small. The value 0x31 indicates residual volume control warning level 1. The value 0x32 indicates residual volume control warning level 2. The value 0x33 indicates residual volume control warning level 3. The value 0x42 indicates that no residual volume control warning is issued. When the residual volume decreases below a residual volume control warning level setting (the property value for the set value of residual volume control warning level 1, set value of residual volume control warning level 2, or set value of residual volume control warning level 3), the associated property value shall be taken as stated above. The residual volumes indicated by the three warning levels shall be, in decreasing order, the set value of residual volume control warning level 1, set value of residual volume control warning level 2, and set value of residual volume control warning level 3.

(10) Residual volume control warning level 1

Sets the residual kerosene volume that changes the value of the residual volume control warning level



© 2000 - 2023 ECHONET Consortium

property (0xE8) to residual volume control warning level 1 (0x31). The property value range shall be 0 to 0xFFFFFF (0 to 16,777,215L).

(11) Residual volume control warning level 2

Sets the residual kerosene volume that changes the value of the residual volume control warning level property (0xE8) to residual volume control warning level 2 (0x32). The property value range shall be 0 to 0xFFFFFF (0 to 16,777,215L).

(12) Residual volume control warning level 3

Sets the residual kerosene volume that changes the value of the residual volume control warning level property (0xE8) to residual volume control warning level 3 (0x33). The property value range shall be 0 to 0xFFFFFF (0 to 16,777,215L).

(13) Slight leak timer value (kerosene flow rate continuation)

This property indicates the number of days for which gas has flowed continuously. The property value range shall be 0 to 0xFD (0 to 253 days).

(14) ID number setting

This property indicates the ID number of the meter. The setting scope shall be a 6-digit code comprised of 6 one-byte alphanumeric characters.

ID numbers are used when there are two or more meters.

(15) Verification expiration setting

When the meter is one that has been verified by a verifying organization, this property indicates the month and year in which the verification of the meter will expire.

(16) Measured cumulative kerosene consumption information with date and time

This property indicates the cumulative kerosene consumption and the date and time of measurement in the format of 4 bytes for date of measurement, 3 bytes for time of measurement, and 4 bytes for cumulative kerosene consumption.

The date of measurement shall be indicated in the format of two bytes for year, one byte for month, and one byte for day. The time of measurement shall be indicated in the format of one byte for hour, one byte for minute, and one byte for second. If the meter has no second information, 0x00 shall be set for second.

Cumulative kerosene consumption shall follow the definition in “(3) Measured cumulative kerosene consumption.”



© 2000 - 2023 ECHONET Consortium

* EPC of 0xE2 (measured cumulative kerosene consumption) or 0xD0 (measured cumulative kerosene consumption information with date and time) is required

(17) Historical information of cumulative kerosene consumption

This property indicates the historical information of kerosene consumption measured at every hour in the format of 4 bytes for the date of history start, 3 bytes for the time of history start, 4 bytes × 24 for historical data of measured cumulative kerosene consumption, 4 bytes for cumulative kerosene consumption at history start, and 2 bytes for cumulative time interval.

The date of history start shall be indicated in the format of two bytes for year, one byte for month, and one byte for day. The time of history start shall be indicated in the format of one byte for hour, one byte for minute, and one byte for second. If the meter has no second information, 0x00 shall be set for second.

Historical data of measured cumulative kerosene consumption indicates the kerosene consumption (unit: 0.001L) at every cumulative interval using a 5-digit decimal notation number. The value range of the property shall be from 0x00000 to 0xF423F (0-99.999L).

Cumulative kerosene consumption at history start shall follow the definition in "(3) Measured cumulative kerosene consumption."

The value range of cumulative time interval shall be 0x0001 to 0xFFFF (1 to 65,535 minutes).

Example:

Sending 24 cumulative values (reading increment at every hour) from 00:00:00 on March 1, 2012 (reading: 123,456.789L) after 00:00:00 on March 2

Date of history start (YYYY：MM：DD) = 0x07DC0301 (2012：03：01)

Time of history start (hh：mm：ss) = 0x000000 (00：00：00)

Historical data of measured cumulative kerosene consumption = See the table below (24 from Vol.01 to Vol.24)

Cumulative kerosene consumption at history start = 0x075BCD15 (123,456.789L)

Cumulative time interval = 0x3C (60 minutes)

Supplement) Historical data of measured cumulative kerosene consumption corresponding to the transition of cumulative kerosene consumption

| No. | Date | Time | Reading | Historical data of measured cumulative kerosene consumption Vol.01 to 24 |
|---|---|---|---|---|
| | 20120301 | 000000 | 123456789 | |
| 01 | 20120301 | 010000 | 123456799 | 00010 (=123456799－123456789) |



© 2000 - 2023 ECHONET Consortium

| | | | | |
|---|---|---|---|---|
| 02 | 20120301 | 020000 | 123456819 | 00020 (=123456819－123456799) |
| 03 | 20120301 | 030000 | 123456849 | 00030 (=123456849－123456819) |
| 04 | 20120301 | 040000 | 123456889 | 00040 (=123456889－123456849) |
| ・<br>・<br>・ | ・<br>・<br>・ | ・<br>・<br>・ | ・<br>・<br>・ | ・<br>・<br>・ |
| 21 | 20120301 | 210000 | 123461234 | 01000 (=123461234－123460234) |
| 22 | 20120301 | 220000 | 123461756 | 00522 (=123461756－123461234) |
| 23 | 20120301 | 230000 | 123461756 | 00000 (=123461756－123461756) |
| 24 | 20120302 | 000000 | 123461756 | 00000 (=123461756－123461756) |



© 2000 - 2023 ECHONET Consortium

# 3．3．30 Requirements for smart electric energy meter for sub-metering class

Class group code : 0x02

Class code : 0x8D

Instance code : 0x01–0x7F (0x00: All-instance specification code)

| Property name | EPC | Contents of property | Data type | Data size | Unit | Access rule | Mandatory | Announcement at status change | Remarks |
|---|---|---|---|---|---|---|---|---|---|
| | | Value range (decimal notation) | | | | | | | |
| Operation status | 0x80 | This property indicates the ON/OFF status.<br>ON=0x30, OFF=0x31 | Unsigned char | 1 byte | - | Set<br>Get | <br>○ | ○ | |
| Current time setting | 0x97 | Current time (HH: MM format)<br>0x00-0x17: 0x00-0x3B<br>(0–23): (0–59) | Unsigned char x 2 | 2 bytes | - | Set/ Get | | | |
| Current date setting | 0x98 | Current date (YYYY: MM: DD format)<br>1-0x270F: 1-0x0C: 1-0x1F<br>(1-9999): (1-12): (1-31) | Unsigned char x 4 | 4 bytes | - | Set/ Get | | | |
| Electric power coefficient | 0xD3 | This property indicates the coefficient for converting measured cumulative amount of electric energy, historical data of measured cumulative amount of electric energy, measured instantaneous electric power, cumulative amount of electric energy measured at a fixed time to actual usage amounts using a 6-digit decimal notation.<br>0x00000001–0x000F423F<br>(000001–999999) | Unsigned long | 4 bytes | - | Get | | | |
| Unit for cumulative amount of electric energy (normal and reverse directions) | 0xD4 | This property indicates the unit (multiplying factor) used for the measured cumulative amount of electric energy, historical data of measured cumulative amount of electric energy, and cumulative amount of electric energy measured at a fixed time.<br>0x00:1kWh<br>0x01:0.1kWh<br>0x02:0.01kWh<br>0x03:0.001kWh<br>0x04:0.0001kWh<br>0x0A:10kWh<br>0x0B:100kWh | Unsigned char | 1 byte | - | Get | ○ | | |
| Number of effective digits for cumulative amount of electric energy | 0xD7 | This property indicates the number of effective digits for measured cumulative amount of electric energy, historical data of measured cumulative amount of electric energy, and cumulative amount of electric energy measured at a fixed time.<br>0x01–0x08<br>(1–8) | Unsigned char | 1 bytes | digit | Get | ○ | | |



© 2000 - 2023 ECHONET Consortium

| | | | | | | | | | |
|---|---|---|---|---|---|---|---|---|---|
| Electric current coefficient | 0xD8 | This property indicates the coefficient for converting measured instantaneous current to actual electric current using a 3-digit decimal notation.<br>0x0001–0x03E7<br>(1–999) | Unsigned short | 2 bytes | - | Get | | | |
| Voltage coefficient | 0xD9 | This property indicates the coefficient for converting measured instantaneous currents to actual electric voltage using a 3-digit decimal notation.<br>0x0001–0x03E7<br>(1–999) | Unsigned short | 2 bytes | - | Get | | | |
| Day for which the historical data of measured cumulative amount of electric energy is to be retrieved | 0xE0 | This property indicates the day for which the historical data of measured cumulative amount of electric energy (which consists of 48 pieces of half-hourly data for the preceding 24 hours) is to be retrieved.<br>0x00-0x63, 0xFF<br>(0-99)<br>0: today,<br>1 – 99: yesterday – the day 99 days ago,<br>0xFF: not set (default value). | Unsigned char | 1 byte | - | Set/ Get | ○ | | |
| Measured cumulative amount of electric energy (normal direction) | 0xE1 | This property indicates the cumulative amount of electric energy using a number of effective digits for cumulative amount of electric energy (max. eight digits).<br>0x00000000–0x05F5E0FF<br>(0–99,999,999)<br>0xFFFFFFFE: No measured data | Unsigned long | 4 bytes | kWh<br>*1 | Get | ○ | | |
| Historical data of measured cumulative amount of electric energy (normal direction) | 0xE2 | This property indicates the day for which the historical data of measured cumulative amount of electric energy is to be retrieved and the historical data of measured cumulative amount of electric energy (normal direction), which consists of 48 items of half-hourly data for the preceding 24 hours (00:00 to 23:30) of the day by time series from the highest-order byte.<br>The 1st and 2nd bytes: the day for which the historical data of measured cumulative amount of electric energy is to be retrieved<br>0x0000 - 0x0063, 0x00FF<br>(0 - 99)<br>0: today,<br>1 - 99: yesterday - the day 99 days ago,<br>0x00FF: not set.<br><br>The 3rd and succeeding bytes:<br>measured cumulative amount of electric energy<br>0x00000000 - 0x05F5E0FF<br>(0 - 99,999,999)<br>0xFFFFFFFE: no measured data | Unsigned short<br>+<br>Unsigned long<br>× 48 | 194 bytes | kWh<br>*1 | Get | ○ | | |
| Measured cumulative amount of electric energy (reverse direction) | 0xE3 | This property indicates the cumulative amount of electric energy using a number of effective digits for cumulative amount of electric energy (max. eight digits).<br>0x00000000–0x05F5E0FF<br>(0–99,999,999)<br>0xFFFFFFFE: No measured data | Unsigned long | 4 bytes | kWh<br>*1 | Get | ○ | | |



© 2000 - 2023 ECHONET Consortium

| | | | | | | | | | |
|---|---|---|---|---|---|---|---|---|---|
| Historical data of measured cumulative amount of electric energy (reverse direction) | 0xE4 | This property indicates the day for which the historical data of measured cumulative amount of electric energy is to be retrieved and the historical data of measured cumulative amount of electric energy (reverse direction), which consists of 48 items of half-hourly data for the preceding 24 hours (00:00 to 23:30) of the day by time series from the highest-order byte.<br>The 1st and 2nd bytes: the day for which the historical data of measured cumulative amount of electric energy is to be retrieved<br>0x0000 - 0x0063, 0x00FF<br>(0 - 99)<br>0: today,<br>1 - 99: yesterday - the day 99 days ago,<br>0x00FF: not set.<br><br>The 3rd and succeeding bytes:<br>measured cumulative amount of electric energy<br>0x00000000 - 0x05F5E0FF<br>(0 - 99,999,999)<br>0xFFFFFFFE: no measured data | Unsigned short + Unsigned long × 48 | 194 bytes | kWh<br>*1 | Get | ○ | | |
| Measured instantaneous electric power | 0xE7 | This property indicates the measured effective instantaneous electric power in units of 1W.<br>If the device has voltage transformer (VT) and current transformer (CT), the electric power at the secondary side shall be taken.<br>0x80000001–0x7FFFFFFD,<br>(-2,147,483,647–2,147,483,645)<br>0x7FFFFFFE: No measured data | signed long | 4 bytes | W<br>*2 | Get | ○ | | |
| Measured instantaneous currents | 0xE8 | This property indicates the measured effective instantaneous R and T phase currents in unit of 0.1A side-by-side.<br>In the case of a single-phase, two-wire system, 0x7FFE shall be used for the T phase.<br>If the device has current transformer (CT), the electric current at the secondary side shall be taken.<br>0x8001–0x7FFD (R phase):<br>0x8001–0x7FFD (T phase)<br>(-3,276.7–3,276.5):<br>(-3,276.7–3,276.5)<br>0x7FFE: No measured data | signed short ×2 | 4 bytes | 0.1A<br>*2 | Get | ○ | | |
| Measured instantaneous voltages | 0xE9 | This property indicates the measured effective instantaneous R-S(N) and S(N)-T voltages in unit of 0.1V side-by-side.<br>In the case of a single-phase, two-wire system, 0xFFFE shall be used for the S(N)-T voltage.<br>If the device has a voltage transformer (VT), the measured electric voltage at the secondary side shall be taken.<br>0x0000–0xFFFD<br>(between R and S(N)):<br>0x0000–0xFFFD<br>(between S(N) and T)<br>(0–6,553.3): (0–6,553.3)<br>0xFFFE: No measured data | unsigned short ×2 | 4 bytes | 0.1V<br>*2 | Get | | | |



© 2000 - 2023 ECHONET Consortium

| | | | | | | | | | |
|---|---|---|---|---|---|---|---|---|---|
| Cumulative amount of electric energy measured at a fixed time<br>(normal direction) | 0xEA | This property indicates the most recent cumulative amount of electric energy (normal direction) measured at 30-minute intervals held by the meter in the format of 4 bytes for the date of measurement, 3 bytes for the time of measurement, and 4 bytes for the cumulative electric energy (normal direction).<br>・ Date of measurement: YYYY:MM:DD<br>・Time of measurement: hh:mm:ss<br>・Cumulative amount of electric energy Max. 8 digits in decimal notation (number of effective digits for cumulative amount of electric energy)<br>The 1st thru 4th bytes: Date of measurement<br>YYYY: 0x0001 – 0x270F (1 – 9,999)<br>MM: 0x01 – 0x0C (1 – 12)<br>DD: 0x01 – 0x1F (1 – 31)<br><br>The 5th thru 7th bytes: Time of measurement<br>hh: 0x00 – 0x17 (0 – 23)<br>mm: 0x00 – 0x3B (0 – 59)<br>ss: 0x00 – 0x3B (0 – 59)<br><br>The 8th thru 11th bytes:<br>cumulative amount of electric energy measured<br>0x00000000 – 0x05F5E0FF (0 – 99,999,999)<br>0xFFFFFFFE: No measured data | unsigned short<br>+<br>unsigned char×2<br>+<br>unsigned char×3<br>+<br>unsigned long | 11 bytes | Year, month, day, time, hour, second, kWh<br><br>*1 | Get | ○ | | |
| Cumulative amount of electric energy measured at a fixed time<br>(reverse direction) | 0xEB | This property indicates the most recent cumulative amount of electric energy (reverse direction) measured at 30-minute intervals held by the meter in the format of 4 bytes for the date of measurement, 3 bytes for the time of measurement, and 4 bytes for the cumulative electric energy (reverse direction).<br>・ Date of measurement: YYYY:MM:DD<br>・Time of measurement: hh:mm:ss<br>・Cumulative amount of electric energy: Max. 8 digits in decimal notation (number of effective digits for cumulative amount of electric energy)<br>The 1st thru 4th bytes: Date of measurement<br>YYYY: 0x0001 – 0x270F (1 – 9,999)<br>MM: 0x01 – 0x0C (1 – 12)<br>DD: 0x01 – 0x1F (1 – 31)<br><br>The 5th thru 7th bytes: Time of measurement<br>hh: 0x00 – 0x17 (0 – 23)<br>mm: 0x00 – 0x3B (0 – 59)<br>ss: 0x00 – 0x3B (0 – 59)<br><br>The 8th thru 11th bytes:<br>cumulative amount of electric energy measured<br>0x00000000 – 0x05F5E0FF (0 – 99,999,999)<br>0xFFFFFFFE: No measured data | unsigned short<br>+<br>unsigned char×2<br>+<br>unsigned char×3<br>+<br>unsigned long | 11 bytes | Year, month, day, time, hour, second, kWh<br><br>*1 | Get | ○ | | |



© 2000 - 2023 ECHONET Consortium

Note 1: *1 The unit for the cumulative amount of electric energy measurement value (kWh) shall be represented by the property of unit for cumulative amount of electric energy (normal and reverse directions).

*2 Measured instantaneous electric energy, measured instantaneous currents, and measured instantaneous currents indicate measured values at the secondary side when measured with instruments with a voltage transformer and/or current transformer.

Note 2: In the "Announcement at status change" column, ○ denotes mandatory processing when the property is implemented.

This class shall be used for general purpose electric energy meters depending on neither low-voltage nor high-voltage (so-called "sub-meters"), assuming that, especially in Japan, general users, aggregators, and the like independently install electric energy meters to measure electric energy in order to trade/certify dispersed power sources and devices. Further, the electric energy meters installed by general energy transmission and distribution system operators (having "Den (電)" marked on the instruments) implement either low-voltage smart electric energy meter class (class group code: 0x02, class code: 0x88) or high-voltage smart electric energy meter class (class group code: 0x02, class code: 0x8A).

(1) Operation status (inherited from the device object super class property)
This property indicates whether the functions specific to this class are operating (ON) or not (OFF). In the case of a node in which this class is implemented and the functions specific to this class start operating upon startup of the node, this property may be implemented with the value fixed at 0x30 (operation status ON).

(2) Current time setting (inherited from the super class property)
This property indicates the current local time using a value between 0x00 and 0x17 (0-23) for the hour and a value between 0x00 and 0x3B (0-59) for the minute.
The first byte of the property value indicates the hour and the second byte indicates the minute.
When this property is Set, "00" seconds is set to the electric meters that control time in seconds.
The electric meters having Get only (or not having this property) are instruments that internally control time.

(3) Current date setting (inherited from the super class property)
This property indicates the current date using a value between 0x0001 and 0x270F (1-9999) for the



© 2000 - 2023 ECHONET Consortium

year, a value between 0x01 and 0x0C (1-12) for the month and a value between 0x01 and 0x1F (1-31) for the day.

The first and second bytes are treated as one piece of unsigned short data which indicates the year (2 bytes). The third byte indicates the month (1 byte) and the fourth byte indicates the day (1 byte).

The electric meters having Get only (or not having this property) are instruments that internally control date.

(4) Electric power coefficient

This property indicates the coefficient for converting the measured cumulative amount of electric energy and the historical data of measured cumulative amount of electric energy, measured instantaneous electric power, cumulative amount of electric energy measured at a fixed time to actual usage amounts using a 6-digit decimal notation. The actual usage amount shall be a value multiplied by an electric power coefficient.

If this property is not implemented, the coefficient shall be treated as 1.

(5) Unit for measured cumulative amount of electric energy (normal and reverse directions)

This property indicates the unit used for the measured cumulative amount of electric energy, the historical data of the measured cumulative amount of electric energy, and cumulative amount of electric energy measured at a fixed time.

(6) Number of effective digits for cumulative amount of electric energy

This property indicates the number of effective digits from the low-order side of the measured cumulative amount of electric energy, historical data of measured cumulative amount of electric energy, and cumulative amount of electric energy measured at a fixed time (data size: 4 bytes, number of digits: 8).

Example: Number of effective digits for the cumulative amount of electric energy=0x06 (six digits)

The cumulative amount of electric energy value overflows at 0x000F423F (999999) and increments again from 0x00000000(0).

Example: Number of effective digits for the cumulative amount of electric energy=0x07 (seven digits)

The cumulative amount of electric energy value overflows at 0x0098967F (9999999) and increments again from 0x00000000(0).

(7) Electric current coefficient

This property indicates the coefficient for converting measured instantaneous current to actual electric current using a 3-digit decimal notation. The actual electric current value shall be a value multiplied by an electric current coefficient.



© 2000 - 2023 ECHONET Consortium

If this property is not implemented, the coefficient shall be treated as 1.

For direct connection type meters not having a transformer, it is normally 1.

(8) Voltage coefficient

This property indicates the coefficient for converting measured instantaneous voltage to actual voltage using a 3-digit decimal notation. The actual voltage value shall be a value multiplied by a voltage coefficient.

Instruments having no measured instantaneous voltage (EPC=0xE9) output functions do not have this property. If this property is not implemented but measured instantaneous voltages (EPC=0xE9) is implemented, the coefficient shall be treated as 1.

For direct connection type meters not having a transformer and instruments having a low-voltage current transformer, it is normally 1.

(9) Day for which the historical data of measured cumulative amount of electric energy is to be retrieved

This property specifies the day on which the historical data of measured cumulative amount of electric energy (EPC=0xE2, 0xE4) is to be set with the value range is from 0x00 to 0x63 (from 0 to 99) for day on which the historical data of measured cumulative amount of electric energy.

0x00 (0): measured historical data for the current day (up to the latest hour)

0x63 (99): measured historical data for the day that precedes the current day by 99 days

The default values of this property shall be 0xFF.

(10) Measured cumulative amount of electric energy (normal direction)

This property indicates the measured cumulative amount of electric energy in the normal direction (normal power flow) using an 8-digit decimal notation number. The unit shall be indicated by the “Unit of cumulative amount of electric energy” property (EPC=0xD4). The property value range is from 0x00000000 to 0x05F5E0FF (0 to 99,999,999). When the cumulative amount of electric energy exceeds the number of effective digits specified by “number of effective digits for the cumulative amount of electric energy” (EPC=0xD7), the value shall be increased again from 0x00000000(0).

If the “electric energy coefficient” (EPC=0xD3) is specified, the value multiplied by the coefficient is the actual usage amount. The unit shall be indicated by the “Unit of cumulative amount of electric energy” property (EPC=0xD4).

Overflow : Counting shall be restarted from 0x00000000.

No measured data: 0xFFFFFFFE

Example:

Number of effective digits for cumulative amount of electric energy (EPC=0xD7): 0x07



© 2000 - 2023 ECHONET Consortium

(seven digits)

Electric energy coefficient (EPC=0xD3): 0x000012C0 (4800)

Unit for cumulative amount of electric energy (EPC=0xD4): 0x03 (0.001kWh)

With the above three conditions,

Measured cumulative amount of electric energy (normal direction)=0x0012D687 (1234567)

is used in the actual energy calculation as:

1234567 × 4800 × 0.001 kWh = 5925921.6 kWh (actual usage amount)

(11) Historical data of measured cumulative amount of electric energy (normal direction)

This property includes two elements; One is the value specified by "Day for which the historical data of measured cumulative amount of electric energy is to be retrieved" (EPC=0xE0) in 2 bytes (0x0000 to 0x0063 (0 to 99)). The other is the historical data of measured cumulative amount of electric energy in the normal direction (meter reading; it means not 30-minutes cumulative values) every 30 minutes (at 00 and 30 minutes every hour) for 24 hours (00:00 to 23:30) on that day, 48 times in total, by time series from the highest-order byte.

The cumulative amount of electric energy is indicated up to 8-digits in decimal notation. The value range is from 0x00000000 to 0x05F5E0FF (0 to 99,999,999). When the cumulative amount of electric energy exceeds the number of effective digits specified by "number of effective digits for the cumulative amount of electric energy" (EPC=0xD7), the value shall be increased again from 0x00000000(0). If the "electric energy coefficient" (EPC=0xD3) is specified, the value multiplied by the coefficient is the actual usage amount. The unit shall be indicated by the "Unit for cumulative amount of electric energy" property (EPC=0xD4). If there is no measured data for the corresponding time, the value of cumulative amount of electric energy shall be set to 0xFFFFFFFE (no measured data)

In the case that "Day for which the historical data of measured cumulative amount of electric energy is to be retrieved" (EPC=0xE0) is not set (i.e., the default value), the day for which the historical data of measured cumulative amount of electric energy is to be retrieved shall be set to 0x00FF and all half-hourly measurements of cumulative amount of electric energy shall be set to 0xFFFFFFFE.

Overflow : Counting shall be restarted from 0x00000000.

No measured data: 0xFFFFFFFE

(12) Measured cumulative amount of electric energy (reverse direction)

This property indicates the measured cumulative amount of electric energy in the reverse direction (reverse power flow) using an up to 8-digit decimal notation number. The value range is from 0x00000000 to 0x05F5E0FF (0 to 99,999,999). When the cumulative amount of electric energy exceeds the number of effective digits specified by "number of effective digits for the cumulative



© 2000 - 2023 ECHONET Consortium

amount of electric energy" (EPC=0xD7), the value shall be increased again from 0x00000000(0). If the "electric energy coefficient" (EPC=0xD3) is specified, the value multiplied by the coefficient is the actual usage amount. The unit shall be indicated by the "Unit for cumulative amount of electric energy" property (EPC=0xD4).

Overflow: Counting shall be restarted from 0x00000000.

No measured data: 0xFFFFFFFE

(13) Historical data of measured cumulative amount of electric energy (reverse direction)

This property includes two elements; One is the value specified by "Day for which the historical data of measured cumulative amount of electric energy is to be retrieved" (EPC=0xE0) in 2 bytes (0x0000 to 0x0063 (0 to 99)). The other is the historical data of measured cumulative amount of electric energy in the reverse direction (meter reading; it means not 30-minutes cumulative values) every 30 minutes (at 00 and 30 minutes every hour) for 24 hours (00:00 to 23:30) on that day, 48 times in total, by time series from the highest-order byte.

The cumulative amount of electric energy is indicated up to 8-digits in decimal notation. The value range is from 0x00000000 to 0x05F5E0FF (0 to 99,999,999). When the cumulative amount of electric energy exceeds the number of effective digits specified by "number of effective digits for the cumulative amount of electric energy" (EPC=0xD7), the value shall be increased again from 0x00000000(0). If the "electric energy coefficient" (EPC=0xD3) is specified, the value multiplied by the coefficient is the actual usage amount. The unit shall be indicated by the "Unit for cumulative amount of electric energy" property (EPC=0xD4). If there is no measured data for the corresponding time, the value of cumulative amount of electric energy shall be set to 0xFFFFFFFE (no measured data)

In the case that "Day for which the historical data of measured cumulative amount of electric energy is to be retrieved" (EPC=0xE0) is not set (i.e., the default value), the day for which the historical data of measured cumulative amount of electric energy is to be retrieved shall be set to 0x00FF and all half-hourly measurements of the cumulative amount of electric energy shall be set to 0xFFFFFFFE.

Overflow : Counting shall be restarted from 0x00000000.

No measured data: 0xFFFFFFFE

(14) Measured instantaneous electric power

This property indicates the measured effective instantaneous electric power in units of 1W. The value range is from 0x80000001 to 0x7FFFFFFD (from -2147483647 to 2147483645).

On instruments measuring electric power via a voltage transformer (VT) and/or current transformer (CT), the actual electric power is calculated by multiplying the "electric power coefficient" (EPC=0xD3).



© 2000 - 2023 ECHONET Consortium

Range: from -2,147,483,647 to 2,147,483,645 W (unit 1 W)

Underflow : 0x80000000

Overflow : 0x7FFFFFFF

No measured data : 0x7FFFFFFE

Note:

There are some meters that can only output absolute values (positive numbers), even in cases where the measured instantaneous electric power should be negative numbers. If positive/negative (+/-) sign is required for this property value, it is necessary to check whether the meter is capable of outputting the sign, in advance.

(15) Measured instantaneous currents

This property indicates the measured effective instantaneous R and T phase currents in increments of 0.1A unit side-by-side. The value range is from 0x8001 to 0x7FFD (from -3276.7 to 3276.5). In the case of a single-phase, two-wire system, measured data shall be stored in the R phase field and 0x7FFE (no measured data) shall be set in the T phase field.

On instruments measuring current via a current transformer (CT), the actual currents is calculated by multiplying the “electric current coefficient” (EPC=0xD8).

Range: from -3276.7 to 3276.5A (unit: 0.1A)

Underflow : 0x8000

Overflow : 0x7FFF

No measured data : 0x7FFE

Example: Single-phase, three-wire system: 0x03E9 0x03E7 → 100.1A 99.9A

Single-phase, two-wire system: 0xFC19 0x7FFE → -99.9A not measured

Note:

There are some meters that can only output absolute values (positive numbers), even in cases where the measured instantaneous electric current should be negative numbers. If positive/negative (+/-) sign is required for this property value, it is necessary to check whether the meter is capable of outputting the sign, in advance

(16) Measured instantaneous voltages

This property indicates the measured effective instantaneous R-S(N) and S(N)-T voltages in increments of 0.1V unit side-by-side. The value range is from 0x0000 to 0xFFFD (from 0 to 6553.3). In the case of a single-phase, two-wire system, the measured data shall be stored in the R-S(N) field and 0xFFFE



© 2000 - 2023 ECHONET Consortium

(no measured data) shall be set in the S(N)-T field.

On instruments measuring voltage via a voltage transformer (VT), actual voltage is calculated by multiplying the "voltage coefficient" (EPC=0xD9).

Range: from 0.0 to 6553.3V (unit: 0.1V)

Overflow : 0xFFFF

No measured data : 0xFFFE

Example: Single-phase, three-wire system: 0x0451 0x03E7 → 110.5V 99.9 V

Single-phase, two-wire system: 0x03E7 0xFFFE → 99.9V not measured

(17) Cumulative amount of electric energy measured at a fixed time (normal direction)

This property indicates the cumulative amount of electric energy (normal direction) measured at 30-minute intervals (every half hour) (meter reading; it means not 30-minute cumulative value) held by the meter in the format of 4 bytes for the date of measurement, 3 bytes for the time of measurement, and 4 bytes for the cumulative amount of electric energy (normal direction). The date of measurement shall be indicated in the format of two bytes for the year, one byte for the month, and one byte for the day. The time of measurement shall be indicated in the format of one byte for the hour, one byte for the minute, and one byte for the second. If the meter does not have information on seconds as a unit of measured time, 0x00 is set for seconds. The measured cumulative amount of electric energy is indicated using up to 8-digit decimal notation number. The value range is from 0x00000000 to 0x05F5E0FF (0 to 99,999,999). When the cumulative amount of electric energy exceeds the number of effective digits specified by "number of effective digits for the cumulative amount of electric energy" (EPC=0xD7), the value shall be increased again from 0x00000000(0). If he "electric energy coefficient" (EPC=0xD3) is specified, the value multiplied by the coefficient is the actual usage amount. The unit shall be indicated by the "Unit for cumulative amount of electric energy" property (EPC=0xD4). The property value shall be set to 0xFFFFFFFE (no measured data) when there is no cumulative amount of electric energy (normal direction).

Overflow : Counting shall be restarted from 0x00000000.

No measured data : 0xFFFFFFFE

Example: Cumulative amount of electric energy measured at a fixed time (normal direction)

- YYYY=0x07E5 (year: 2021), MM=0x0C (month: 12), DD=0x1F (day: 31)
- hh=0x00 (hour:0), mm=0x3B (minute:59), ss=0x00 (second:0)
- Cumulative amount of electric energy (normal direction)=0x0012D687 (01234567)

In this case,

Number of effective digits for cumulative amount of electric energy (EPC=0xD7): 0x07



© 2000 - 2023 ECHONET Consortium

(seven digits)

Electric energy coefficient (EPC=0xD3): 0x00000001 (1)

Unit for cumulative amount of electric energy (EPC=0xD4): 0x03 (0.001kWh)

With the above three conditions:

Measurement date: December 31, 2021

Measurement time: 00:59:00

Cumulative amount of electric energy measured (normal direction) 1234567 × 0.001kWh=1234.567kWh (actual usage amount)

(18) Cumulative amount of electric energy measured at a fixed time (reverse direction)

(19) This property indicates the cumulative amount of electric energy (reverse direction) measured at 30-minute intervals (every half hour) (meter reading; it means not 30-minutes cumulative value) held by the meter in the format of 4 bytes for the date of measurement, 3 bytes for the time of measurement, and 4 bytes for the cumulative amount of electric energy (reverse direction). The date of measurement shall be indicated in the format of two bytes for the year, one byte for the month, and one byte for the day. The time of measurement shall be indicated in the format of one byte for the hour, one byte for the minute, and one byte for the second. If the meter does not have information on seconds as a unit of measured time, 0x00 is set for seconds. The measured cumulative amount of electric energy is indicated using up to 8-digit decimal notation number. The value range is from 0x00000000 to 0x05F5E0FF (0 to 99,999,999). When the cumulative amount of electric energy exceeds the number of effective digits specified by “number of effective digits for the cumulative amount of electric energy” (EPC=0xD7), the value shall be increased again from 0x00000000(0). If the “electric energy coefficient” (EPC=0xD3) is specified, the value multiplied by the coefficient is the actual usage amount. The unit shall be indicated by the “Unit for cumulative amount of electric energy” property (EPC=0xD4). The property value shall be set to 0xFFFFFFFE (no measured data) if there is no cumulative amount of electric energy (reverse direction).

Overflow : Counting shall be restarted from 0x00000000.

No measured data : 0xFFFFFFFE

Example: Cumulative amount of electric energy measured at a fixed time (reverse direction)

- YYYY=0x07E4 (year: 2020), MM=0x04 (month: 4), DD=0x0A (day: 10)
- hh=0x0F (hour:15), mm=0x1E (minute:30), ss=0x37 (second:55)
- Cumulative amount of electric energy (reverse direction)=0x0001E240 (00123456)

In this case;

Number of effective digits for cumulative amount of electric energy (EPC=0xD7): 0x06 (six digits)



© 2000 - 2023 ECHONET Consortium

Electric energy coefficient (EPC=0xD3): 0x00000001 (1)

Unit for cumulative amount of electric energy (EPC=0xD4): 0x02 (0.01kWh)

With the above three conditions:

Measurement date: April 10, 2020

Time of measurement: 15:30:55

Cumulative amount of electric energy measured (reverse direction) 123456 × 0.01kWh=1234.56kWh (actual usage amount)



© 2000 - 2023 ECHONET Consortium

# 3．3．31 Requirements for distributed generator's electric energy meter class

Class group code: 0x02

Class code: 0x8E

Instance code: 0x01–0x7F (0x00: All-instance specification code)

| Property name | EPC | Contents of property<br>Value range (decimal notation) | Data type | Data size | Unit | Access rule | Mandatory | Announcement at status change | Remarks |
|---|---|---|---|---|---|---|---|---|---|
| Operation status | 0x80 | This property indicates the ON/OFF status.<br>ON=0x30, OFF=0x31 | unsigned char | 1 byte | — | Set<br>Get | <br>○ | ○ | |
| Current date setting | 0x98 | Current date (YYYY: MM: DD format)<br>0x0001 to 0x270F: 0x01 to 0x0C: 0x01 to 0x1F<br>(=1 to 9999): (=1 to 12): (=1 to 31) | unsigned short + unsigned char × 2 | 4 bytes | — | Set<br>Get | <br>○ *1 | | |
| Device type | 0xD0 | Class group code, class code, and type of system interconnection type for a device to be measured (power generating unit, etc.)<br>Byte 1: Class group code (0x00 – 0xFF)<br>Byte 2: Class code (0x00 – 0xFF)<br>Byte 3: Type of system interconnection (0x00: system interconnected type, 0x01: stand-alone type) | unsigned char × 3 | 3 bytes | — | Get | ○ | | |
| Device ID | 0xD1 | ID to identify devices to be measured<br>1st–6th byte: MAC address of ECHONET Lite node<br>7th byte: Number that identifies the decentralized electric energy meter implemented in the ECHONET Lite node | unsigned char × 7 | 7 bytes | — | Get | ○ | | |
| Tolerance class | 0xD2 | Tolerance class of the device to be measured (power generating unit, etc.)<br>0x01: n1<br>0x02: n2<br>0x03: n3<br>0x04: n4<br>0x05: n5<br>0x06: n6<br>0x07: n7<br>0xFF: others | unsigned char | 1 byte | — | Get | ○ | | |
| Number of days to retain historical data of measured cumulative amount of electric energy | 0xD3 | Maximum number of days to retain historical data of measured cumulative amount of electric energy<br>0x0000–0x0063 (0–99)<br>0x0000: one the day only<br>0x0001–0x0063:1–99 days earlier<br>0xFFFF: History unavailable | unsigned short | 2 bytes | — | Get | ○ | | |
| Unit for cumulative amount of electric energy | 0xD4 | Unit for cumulative amount of electric energy (AC output, AC input and output during a power outage)<br>0x00: 1 kWh<br>0x01: 0.1 kWh<br>0x02: 0.01 kWh<br>0x03: 0.001 kWh<br>0x04: 0.0001 kWh<br>0x0A: 10 kWh<br>0x0B: 100 kWh<br>0x0C: 1000 kWh<br>0x0D: 10000 kWh | unsigned char | 1 byte | — | Get | ○ | | |



© 2000 - 2023 ECHONET Consortium

| | | | | | | | | | |
|---|---|---|---|---|---|---|---|---|---|
| Day for which the historical data of measured cumulative amount of electric energy is to be retrieved | 0xD5 | This property indicates the day for which the historical data of measured cumulative amount of electric energy (which consists of 48 pieces of half-hourly data for the preceding 24 hours) is to be retrieved.<br>0x0000–0x0063 (0–99)<br>0x0000: on the day<br>0x0001–0x0063:1–99 days earlier<br>0xFFFF: initial value (not set) | unsigned short | 2 bytes | — | Set/ Get | ○ *1 | | |
| Identification number of device to be metered | 0xD6 | Identification number of device to be metered<br>First byte: lower-layer communication ID field<br><br>0x01 to 0xFD:<br>This is a communication protocol used in the lower-layer communication and is set arbitrarily according to the protocol class in the case where unique number is assigned (not used in ECHONET Lite).<br>0x11 to 0x1F: Power line Communication Protocol a and d systems<br>0x31 to 0x3F: Low-Power Radio Communication Protocol<br>0x41 to 0x4F: Extended HBS<br>0x51 to 0x5F: IrDA<br>0x61 to 0x6F: LonTalk 0x71 to 0x7F: Bluetooth<br>0x81 to 0x8F: Ethernet 0x91 to 0x9F: IEEE802.11/11b<br>0xA1: Power line Communication Protocol c systems<br>0xB1: IPv6/Ethernet 0xB2: IPv6/6LoWPAN<br><br>0xFE:<br>2 to 17 bytes are defined by the manufacturer, and are set according to the type. Defined by the type (refer to the identification number for device object super class requirements)<br><br>0xFF:<br>If the protocol used in the lower layer generates the 2nd thru 9th bytes randomly, the 1st byte is set 0xFF.<br>0x00:<br>Identification number is not set.<br><br>Second and succeeding bytes: unique number field | unsigned char | 9 or 17 Bytes | — | Get | | | |
| Current hour, minute, and second setting | 0xDA | Current time (hh:mm:ss format)<br>0x00 to 0x17:0x00 to 0x3B:0x00 to 0x3B<br>(=0 to 23): (=0 to 59): (=0 to 59) | unsigned char | 3 bytes | — | Set | | | |
| | | | | | | Get | ○ *1 | | |
| Time synchronization status | 0xDB | This property indicates the status of time synchronization with NTP servers, etc.<br>0x00: no time synchronization<br>0x01: time synchronization successful<br>0x02: time synchronization failed<br>0xFF: time synchronization function not implemented | unsigned char | 1 byte | — | Get | ○ | | |



© 2000 - 2023 ECHONET Consortium

| | | | | | | | | | |
|---|---|---|---|---|---|---|---|---|---|
| Measured cumulative amount of electric energy (AC input) | 0xE0 | This property indicates the measured cumulative amount of electric energy using an 9-digit decimal notation number.<br>0x00000000 to 0x3B9AC9FF<br>(0 to 999,999,999) | unsigned long | 4 bytes | —<br>*2 | Get | ○<br>*3 | | |
| Historical data of measured cumulative amount of electric energy (AC input) | 0xE1 | This property indicates the day for which the historical data of measured cumulative amount of electric energy is to be retrieved and the historical data of cumulative amount of electric energy measured at fixed time (AC input), which consists of 48 items of half-hourly data for the alternative current input of 24 hours (00:00 to 23:30) of the day by time series from the highest-order byte.<br>1st and 2nd bytes: Day for which the historical data of measured cumulative amount of electric energy is to be retrieved<br>0x0000 to 0x0063 (0 to 99)<br>3rd and succeeding bytes: measured cumulative amount of electric energy<br>0x00000000 to 0x3B9AC9FF<br>(0 to 999,999,999)<br>No measured data: 0xFFFFFFFE<br>*7 | unsigned short<br>+<br>unsigned long<br>× 48 | 194 bytes | —<br>*2 | Get | ○<br>*4 | | |
| Measured cumulative amount of electric energy (AC output)*6 | 0xE2 | This property indicates the measured cumulative amount of electric energy using an 9-digit decimal notation number.<br>0x00000000 to 0x3B9AC9FF<br>(0 to 999,999,999) | unsigned long | 4 bytes | —<br>*2 | Get | ○<br>*3 | | |
| Historical data of measured cumulative amount of electric energy (AC output)*5 | 0xE3 | This property indicates the day for which the historical data of measured cumulative amount of electric energy is to be retrieved and the historical data of cumulative amount of electric energy measured at fixed time (AC output), which consists of 48 items of half-hourly data for the preceding 24 hours (00:00 to 23:30) of the day by time series from the highest-order byte.<br>1sta and 2nd bytes: Day for which the historical data of measured cumulative amount of electric energy is to be retrieved<br>0x0000 to 0x0063 (0 to 99)<br>3rd and succeeding bytes: measured cumulative amount of electric energy<br>0x00000000 to 0x3B9AC9FF (0 to 999,999,999),<br>No measured data: 0xFFFFFFFE *7 | unsigned short<br>+<br>unsigned long<br>× 48 | 194 bytes | —<br>*2 | Get | ○<br>*5 | | |
| Measured cumulative amount of electric energy (independent output) | 0xE4 | This property indicates the measured cumulative amount of electric energy using an 9-digit decimal notation number.<br>0x00000000 to 0x3B9AC9FF<br>(0 to 999,999,999)<br>No measured data: 0xFFFFFFFE *7 | unsigned long | 4 bytes | —<br>*2 | Get | | | |



© 2000 - 2023 ECHONET Consortium

| | | | | | | | | | |
|---|---|---|---|---|---|---|---|---|---|
| Historical data of measured cumulative amount of electric energy (independent output) | 0xE5 | This property indicates the day for which the historical data of measured cumulative amount of electric energy is to be retrieved and the historical data of cumulative amount of electric energy measured at fixed time (output during a power outage), which consists of 48 items of half-hourly data for the preceding 24 hours (00:00 to 23:30) of the day by time series from the highest-order byte.<br>1st and 2nd bytes: Day for which the historical data of measured cumulative amount of electric energy is to be retrieved<br>0x0000 to 0x0063 (0 to 99)<br>3rd and succeeding bytes: measured cumulative amount of electric energy<br>0x00000000 to 0x3B9AC9FF<br>(0 to 999,999,999)<br>No measured data: 0xFFFFFFFE *7 | unsigned short ＋ unsigned long × 48 | 194 bytes | ― *2 | Get | | | |
| Cumulative amount of electric energy measured at fixed time (AC input) | 0xE6 | This property indicates the most recent cumulative amount of electric energy (AC input) measured at 30-minute intervals; measurement date in 4 bytes, measurement time in 3 bytes, and cumulative amount of active electric energy in 4 bytes.<br>・Date of measurement: YYYY:MM:DD<br>・Time of measurement: hh:mm:ss<br>・Cumulative amount of electric energy: 9-digit decimal notation number<br>1st–4th bytes: Measurement date<br>YYYY: 0x0001 to 0x270F<br>(1 to 9999)<br>MM: 0x01 to 0x0C<br>(1 to 12)<br>DD: 0x01 to 0x1F<br>(1 to 31)<br>5th –7th bytes: Time of measurement<br>hh: 0x00 to 0x17 (0 to 23)<br>mm: 0x00 to 0x3B (0 to 59)<br>ss: 0x00–0x3B (0–59)<br>8th – 11th bytes: cumulative amount of electric energy measured<br>0x00000000 to 0x3B9AC9FF<br>(0 to 999,999,999)<br>No measured data: 0xFFFFFFFE *7 | unsigned short ＋ unsigned char ×2 ＋ unsigned char ×3 ＋ unsigned long | 11 bytes | Year, month, Day hour, minute, second ― *2 | Get | ○ *4 | | |
| Cumulative amount of electric energy measured at fixed time (AC output) *5 | 0xE7 | This property indicates the most recent cumulative amount of electric energy (AC output) measured at 30-minute intervals; measurement date in 4 bytes, measurement time in 3 bytes, and cumulative amount of active electric energy in 4 bytes.<br>・Date of measurement: YYYY:MM:DD<br>・Time of measurement: hh:mm:ss<br>・Cumulative amount of electric energy: 9-digit decimal notation number | unsigned short ＋ unsigned char×2 ＋ unsigned char×3 ＋ unsigned long | 11 bytes | Year, month, day, hour, minute, second ― *2 | Get | ○ *5 | | |



© 2000 - 2023 ECHONET Consortium

| | | | | | | | | | |
|---|---|---|---|---|---|---|---|---|---|
| | | 1st–4th bytes: Measurement date<br>YYYY: 0x0001 to 0x270F<br>(1to 9999)<br>MM: 0x01 to 0x0C<br>(1 to 12)<br>DD: 0x01 to 0x1F<br>(1 to 31)<br>5th – 7th bytes: Time of measurement<br>hh: 0x00 to 0x17 (0 to 23)<br>mm: 0x00 to 0x3B (0 to 59)<br>ss: 0x00 to 0x3B (0 to 59)<br>8th – 11th bytes: cumulative amount of electric energy measured<br>0x00000000 to 0x3B9AC9FF<br>(0 to 999,999,999)<br>No measured data: 0xFFFFFFFE *7 | | | | | | | |
| Cumulative amount of electric energy measured at fixed time (independent output) | 0xE8 | This property indicates the most recent cumulative amount of electric energy (output during a power outage) measured at 30-minute intervals; measurement date in 4 bytes, measurement time in 3 bytes, and cumulative amount of active electric energy in 4 bytes.<br>・Date of measurement: YYYY:MM:DD<br>・Time of measurement: hh:mm:ss<br>・Cumulative amount of electric energy: 9-digit decimal notation number<br>1st–4th bytes: Measurement date<br>YYYY: 0x0001 to 0x270F<br>(1 to 9999)<br>MM: 0x01 to 0x0C<br>(1 to 12)<br>DD: 0x01 to 0x1F<br>(1 to 31)<br>5th – 7th bytes: Time of measurement<br>hh: 0x00 to 0x17 (0 to 23)<br>mm: 0x00 to 0x3B (0 to 59)<br>ss: 0x00 to 0x3B (0 to 59)<br>8th – 11th bytes: cumulative amount of electric energy measured<br>0x00000000 to 0x3B9AC9FF<br>(0 to 999,999,999)<br>No measured data: 0xFFFFFFFE *7 | unsigned short + unsigned char×2 + unsigned char×3 + unsigned long | 11 bytes | Year, month, day, hour, minute, second — *2 | Get | | | |
| Measured instantaneous electric power (AC input/output)*6 | 0xE9 | This property indicates the effective instantaneous electric power (AC input/output) in units of 1W.<br>0x80000001 to 0x7FFFFFFD<br>(-2,147,483,647 to 2,147,483,645) *7 | signed long | 4 bytes | W | Get | | | |
| Measured instantaneous electric power (independent output) | 0xEA | This property indicates the effective instantaneous electric power (output during a power outage) in units of 1W.<br>0x80000001 to 0x7FFFFFFD<br>(-2,147,483,647 to 2,147,483,645) | signed long | 4 bytes | W | Get | | | |

Note 1） In the “Announcement at status change” column, ○ denotes mandatory processing if the property is implemented.

Note 2）

*1: Distributed generator’s electric energy meters that retain historical data of measured cumulative amount of electric energy must implement this property.

*2: The measured cumulative amount of electric energy shall be a cumulative amount from the



© 2000 - 2023 ECHONET Consortium

beginning of operation and its unit is indicated in the unit for cumulative amount of electric energy property.

*3: Either one of the measured cumulative amounts of electric energy (AC input) or the measured cumulative amounts of electric energy (AC output) must be implemented.

*4: Distributed generator's electric energy meters that measure AC input and retain the history must implement this property.

*5: Distributed generator's electric energy meters that measure AC output and retain the history must implement this property.

*6: Output from a stand-alone type storage battery system (a battery system that receives system power to charge and discharges the stored electricity via dedicated output terminals or outlets) in discharging operation mode is regarded as AC output. Also output from an EV via its dedicated outlets is regarded as AC output, and so on.

*7: "No measured data" is lack of data in the cases such as for the future time of the day, for the time before the start of measurement, unable to measure due to an error of metering unit, for the skipped time caused by time synchronization, unable to measure due to system power failure, etc.

A Distributed generator's electric energy meter is defined as a power generating equipment, etc. that is equipped with this class and which conforms to the Specific Measurement Scheme in Japan. The next figure shows the examples.

Note: For definitions and requirements of the specific metering scheme, refer to the Guidelines on Specific Measurement Scheme (published by the Ministry of Economy, Trade and Industry).



© 2000 - 2023 ECHONET Consortium

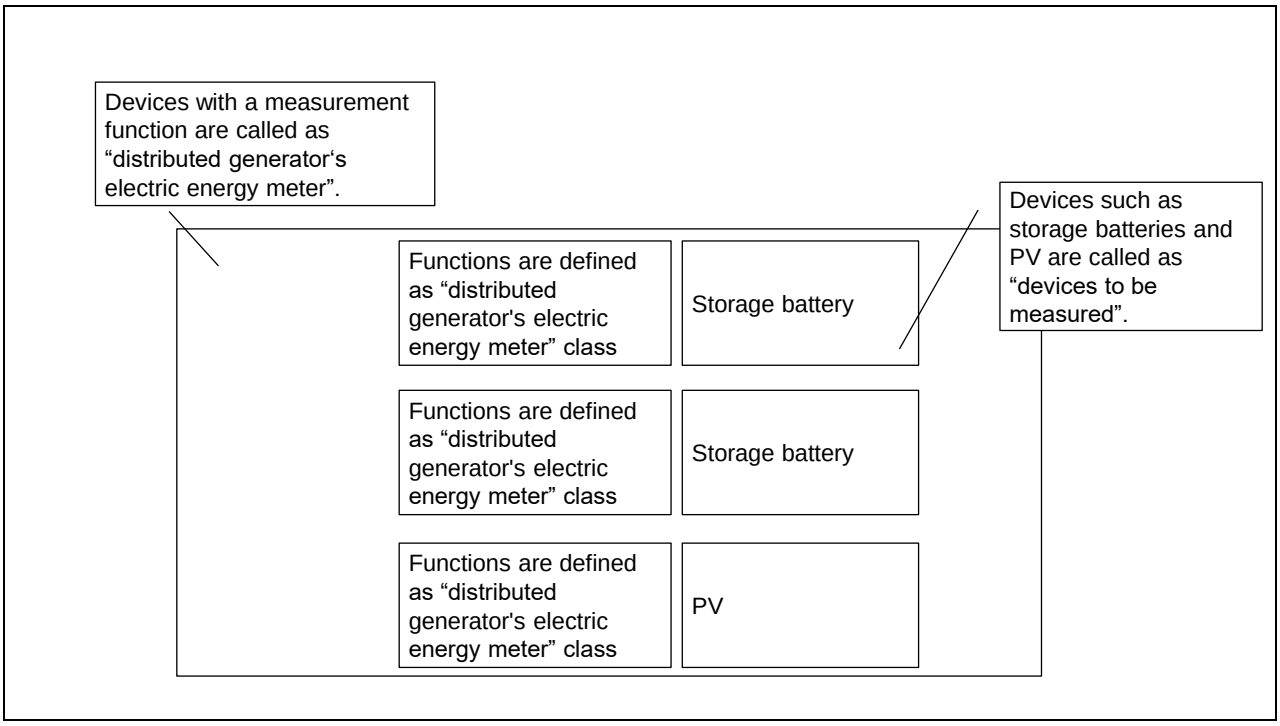


The values for electric energy and electric power of power generation equipment, etc shall be values in AC (alternating current) in this class. The measuring points are shown in the next figure.

Note that the amount of electrical energy is the cumulative value after the equipment installed, and the measured values of multiple power generation equipment, etc. must not be added together.

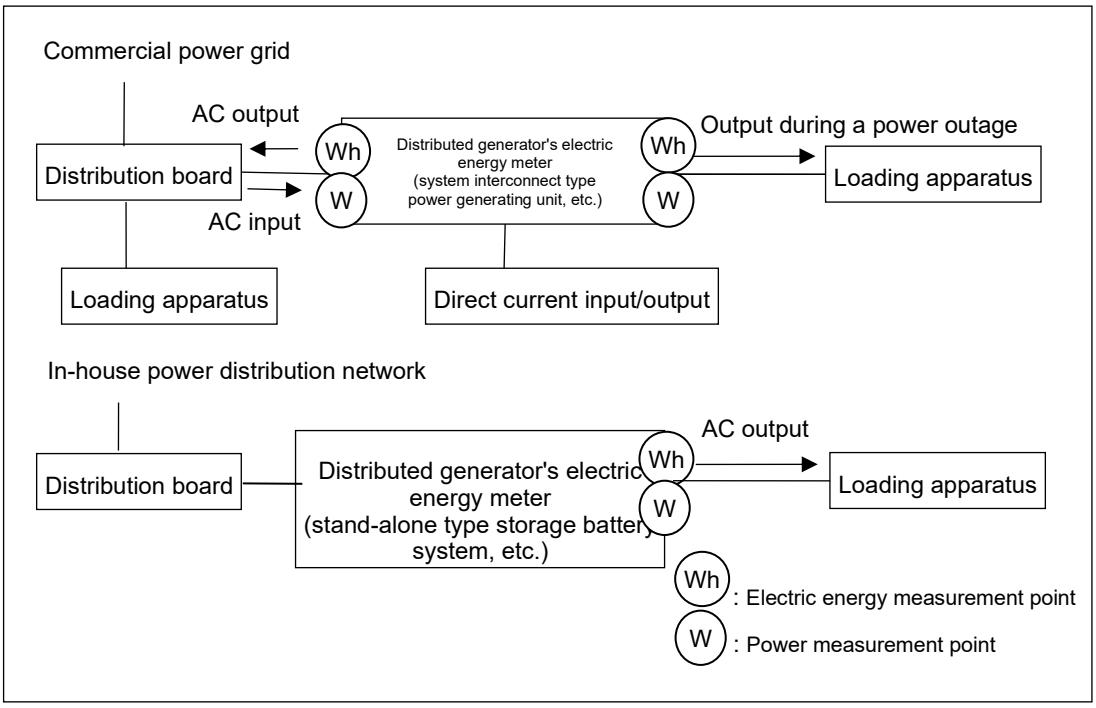




© 2000 - 2023 ECHONET Consortium

The device object of this class and the device object of the device to be metered are implemented on the same node.

The figure below shows configuration examples that this class is implemented in ECHONET Lite nodes. There are cases that are equipped with both this class objects and the objects to be measured (power generating device, etc.) and that are equipped with this class objects and the objects not to be measured.

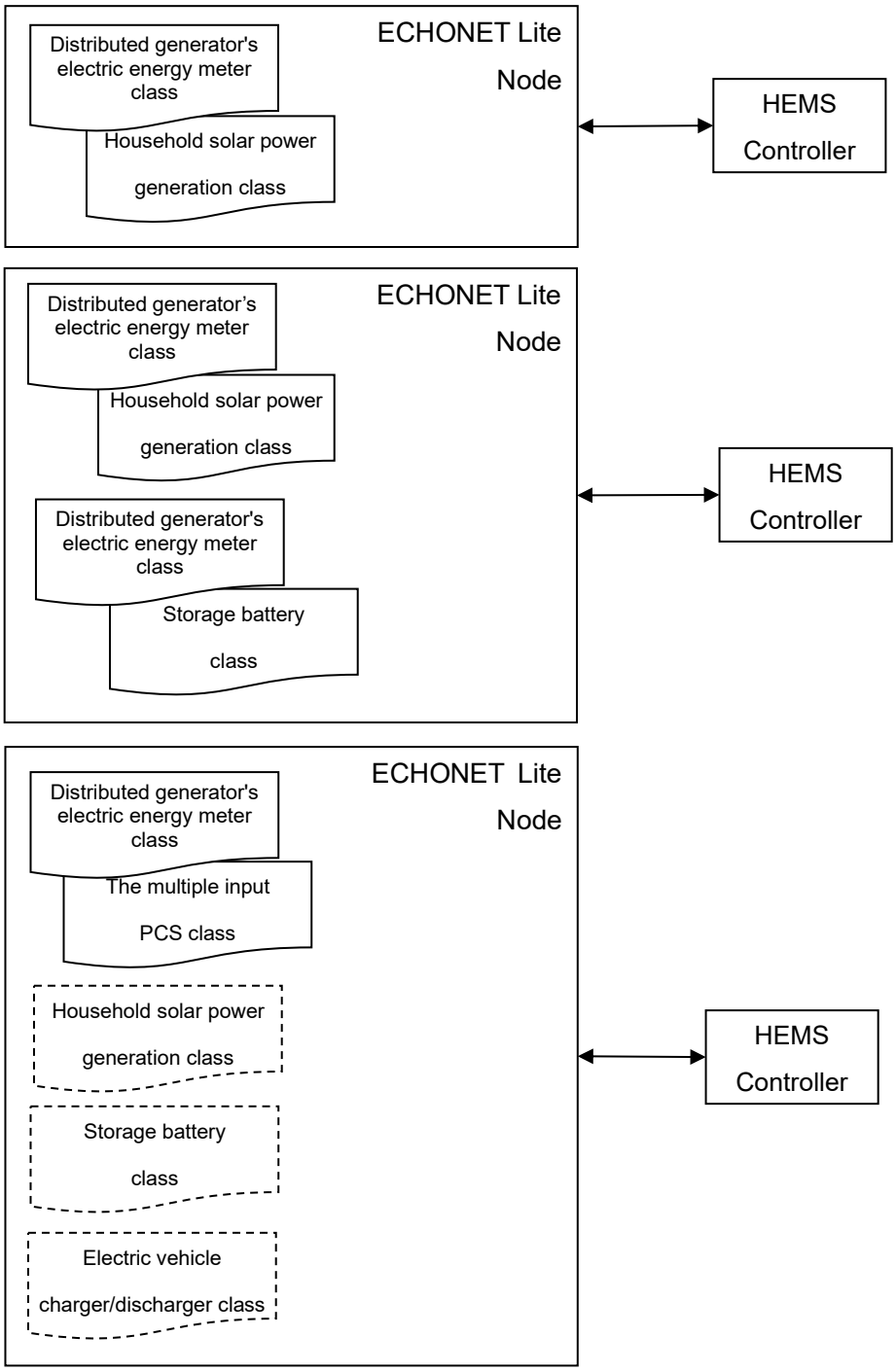




© 2000 - 2023 ECHONET Consortium

Note: Classes indicated with dotted lines are examples of classes not to be measured by this class.

(1) Operation status

This property indicates whether measurement function is operating (ON) or not (OFF). ON shall mean that the measurement is on-going even if there is no input nor output. If measurement is not in operation, it shall be OFF.

(2) Current date setting

This property indicates the current date using a value between 0x0001 and 0x270F (1 to 9999) for the year, a value between 0x01 and 0x0C (1 to 12) for the month and a value between 0x01 and 0x1F (1 to 31) for the day. The first and second bytes are treated as one piece of unsigned short data which indicates the year (2 Bytes). The third byte indicates the month (1 Byte) and the fourth byte indicates the day (1 Byte).

(3) Device type

Objects to be measured are represented with class group code (0x00 to 0xFF), class code (0x00 to 0xFF), and type of system interconnection (0x00: system interconnected type, and 0x01: stand-alone type). Devices with a metering function that is not connected to the grid shall be used as stand-alone devices.

For example, in the case of an electric energy meter with a household solar power generation, the codes are: 0x02 (housing/facilities-related devices), 0x79 (household solar power generation) and 0x00 (system interconnected type).

For example, in the case of electric energy meters for an electric vehicle charger, they are: 0x02 (housing and facility-related device), 0xA1 (electric vehicle charger) and 0x01 (stand-alone system).

(4) Device ID

A global unique ID shall be used to identify decentralized electric energy meters.

MAC address (6 bytes) plus a branch number (1 byte); the branch number shall be in the range of 0x00 to 0xFF. Decentralized electric energy meters implemented on the ECHONET Lite node shall be identified by a branch number. The branch number shall be newly assigned when the decentralized electric energy meter is replaced.

(5) Tolerance class

The measurement accuracy of the power resources, etc., is indicated as a tolerance class according to the scale of transactions, as specified in the Guidelines on Specific Measurement Scheme. If other than n1 through n7 or unknown, “other” (0xFF) shall be used.



© 2000 - 2023 ECHONET Consortium

(6) Number of days to retain historical data of measured cumulative amount of electric energy

This indicates the maximum number of days to retain historical data of measured cumulative amount of electric energy. Value range of the property shall be 0x0000 to 0x0063 (0 to 99), and 0xFFFF for distributed generator's electric energy meters with no historical data of measured cumulative amount of electric energy.

0x0000(0) has the history of the current day only

0x0001(1) has the history of the current day and the previous day

0x0063(99) has the history of the current day through 99 days earlier

(7) Unit for cumulative amount of electric energy

This property indicates units of measured cumulative amount of electric energy, historical data of measured cumulative amount of electric energy, cumulative amount of electric energy measured at fixed time for AC input, AC output, and output during a power outage output.

(8) Day for which the historical data of measured cumulative amount of electric energy is to be retrieved

This property specifies the day for which the historical data of measured cumulative amount of electric energy (EPC=0xE1, 0xE3, 0xE5) is to be retrieved. The value range is from 0x0000 to 0x0063 (0 to 99).

0x0000 (0): specifies the data on the current day (up to the last hour)

0x0063 (99) specifies the data on the day 99 days before

The default values of this property shall be 0xFFFF (no setting).

(9) Identification number of device to be metered

This indicates the identification number (0x83) for the device to be metered (e.g. household solar power generation class, storage battery class, electric vehicle chargers/dischargers class, or multiple input PCS class)

(10) Current hour, minute, and second setting

This property indicates the current time using the “hour (0x00 to 0x17(0 to 23)): minute (0x00 to 0x3B (0 to 59)): second (0x00 to 0x3B (0 to 59))” format. The first byte of the property value indicates the hour, while the second byte indicates minute and the third byte indicates the second.

(11) Time synchronization status

This property indicates the time synchronization status of the ECHONET Lite node.

Devices that do not synchronize with an NTP server or the like, but instead synchronize with



© 2000 - 2023 ECHONET Consortium

ECHONET Lite current date property and current time property shall be indicated as 0x00.

Devices that synchronize with an NTP server or the like and have successfully synchronized at least once in the past 24 hours shall be indicated as 0x01.

Devices that synchronize with an NTP server or the like but have not successfully synchronized within 24 hours shall be indicated as 0x02.

Devices unable to make time synchronization (neither the current date property nor the current time property are implemented, and there is no time synchronization function with an NTP or the like) shall be indicated as 0xFF..

(12) Measured cumulative amount of electric energy (AC input)

This property indicates a measured cumulative amount of electric energy loaded to a power generating device, etc. The unit for cumulative amount of electric energy property (EPC=0xD4) indicates the unit of this value. The value range is from 0x00000000 to 0x3B9AC9FF (0 to 999,999,999). When the cumulative amount of electric energy exceeds the maximum value of the value range, the value shall be increased again from 0x00000000 (0)

Example: Measured cumulative amount of electric energy (AC input) = 0x075BCD15(123456789)

With the condition Unit for cumulative amount of electric energy (EPC=0xD4) = 0x03 (0.001 kWh),

123456789 × 0.001 kWh = 123,456.789 kWh

(13) Historical data of measured cumulative amount of electric energy (AC input)

This property includes two elements. One is the “day for which the historical data of measured cumulative amount of electric energy is to be retrieved” 0x0000 to 0x0063 (0 to 99) specified by “Day for which the historical data of measured cumulative amount of electric energy is to be retrieved 1” (EPC = 0xD5). The other is the historical data of measured cumulative amount of electric energy at every 30 minutes (at 00 and 30 minutes every hour) for 24 hours (00:00 to 23:30) on the day,48 times in total, by time series from the highest-order byte. Note they are not cumulative energies over 30 minutes.

The unit is indicated by the unit for cumulative amount of electric energy property (EPC=0xD4). The value range is from 0x00000000 to 0x3B9AC9FF (0 to 999,999,999). When the value of cumulative amount of electric energy exceeds the maximum value of the value range, the value shall be increased again from 0x00000000(0). If there is no measured data at the corresponding time, the value shall be 0xFFFFFFFE (no measured data).

In the case that “day for which the historical data of measured cumulative amount of electric energy is to be retrieved” (EPC=0xD5) is not set (it shall be a default initial value), the day for which the historical data of measured cumulative amount of electric energy is to be retrieved shall be set to



© 2000 - 2023 ECHONET Consortium

0xFFFF and all half-hourly measurements of cumulative amount of electric energy shall be set to 0xFFFFFFFE.

(14) Measured cumulative amount of electric energy (AC output)

This indicates a measured cumulative amount of electric energy outputted by power generating device etc., as alternating current, and property values of the unit for cumulative amount of electric energy property (EPC=0xD4) indicates the unit. The property value range shall be from 0x00000000 to 0x3B9AC9FF (0 to 999,999,999). When the cumulative amount of electric exceeds the maximum value of the value range, the value shall be increased again from 0x00000000(0).

(15) Historical data of measured cumulative amount of electric energy (AC output)

This property includes two elements. One is the “day for which the historical data of measured cumulative amount of electric energy is to be retrieved” 0x0000 to 0x0063 (0 to 99) specified by “Day for which the historical data of measured cumulative amount of electric energy is to be retrieved 1” (EPC = 0xD5). The other is the historical data of measured cumulative amount of electric energy at every 30 minutes (at 00 and 30 minutes every hour) for 24 hours (00:00 to 23:30) on the day,48 times in total, by time series from the highest-order byte. Note they are not cumulative energies over 30 minutes.

The unit is indicated by the unit for cumulative amount of electric energy property (EPC=0xD4). The property value range is from 0x00000000 to 0x3B9AC9FF (0 to 999,999,999). When the value of cumulative amount of electric energy exceeds the maximum value of the value range, the value shall be increased again from 0x00000000(0). If there is no measured data at the corresponding time, the value shall be 0xFFFFFFFE (no measured data).

In the case that “day for which the historical data of measured cumulative amount of electric energy is to be retrieved” (EPC=0xD5) is not set (it shall be a default initial value), the day for which the historical data of measured cumulative amount of electric energy is to be retrieved shall be set to 0xFFFF and all half-hourly measurements of cumulative amount of electric energy shall be set to 0xFFFFFFFE.

(16) Measured cumulative amount of electric energy (independent output)

This indicates a measured cumulative amount of electric energy outputted by power generating device etc. in output during a power outage mode, and property values of the unit for cumulative amount of electric energy property (EPC=0xD4) indicates the unit. The property value range is from 0x00000000 to 0x3B9AC9FF (0 to 999,999,999). When the cumulative amount of electric exceeds the maximum value of the value range, the value shall be increased again from 0x00000000(0).



© 2000 - 2023 ECHONET Consortium

(17) Historical data of measured cumulative amount of electric energy (independent output)

This property includes two elements. One is the "day for which the historical data of measured cumulative amount of electric energy is to be retrieved" 0x0000 to 0x0063 (0 to 99) specified by "Day for which the historical data of measured cumulative amount of electric energy is to be retrieved 1" (EPC = 0xD5). The other is the historical data of measured cumulative amount of electric energy at every 30 minutes (at 00 and 30 minutes every hour) for 24 hours (00:00 to 23:30) on the day,48 times in total, by time series from the highest-order byte. Note they are not cumulative energies over 30 minutes.

The unit is indicated by the unit for cumulative amount of electric energy property (EPC=0xD4). The property value range is from 0x00000000 to 0x3B9AC9FF (0 to 999,999,999). When the value of cumulative amount of electric energy exceeds the maximum value of the value range, the value shall be increased again from 0x00000000(0). If there is no measured data at the corresponding time, the value shall be 0xFFFFFFFE (no measured data).

In the case that "day for which the historical data of measured cumulative amount of electric energy is to be retrieved" (EPC=0xD5) is not set (it shall be a default initial value), the day for which the historical data of measured cumulative amount of electric energy is to be retrieved shall be set to 0xFFFF and all half-hourly measurements of cumulative amount of electric energy shall be set to 0xFFFFFFFE.

(18) Cumulative amount of electric energy measured at fixed time (AC input)

This property indicates the most recent cumulative amount of electric energy measured at fixed time (AC input) out of measured data at every 30 minutes (at 00 and 30 minutes every hour) (not a cumulative value over 30-minutes) held by power generating device, etc., in 4 bytes for date of measurement, 3 bytes for time of measurement, and 4 bytes for cumulative electric energy (AC input). The date of measurement shall be indicated in the format of two bytes for year, one byte for month, and one byte for day. The time of measurement shall be indicated in the format of one byte for hour, one byte for minute, and one byte for second. If power generating units, etc. do not have information on seconds as a unit of measured time, 0x00 shall be set for seconds. The unit is indicated by the unit for cumulative amount of electric energy property (EPC=0xD4). The value range is 0x00000000 to 0x3B9AC9FF (0 to 99,999,999), and when the value of cumulative amount of electric energy exceeds the maximum value of the value range, the value shall be increased again from 0x00000000(0). If there is no measured data at the corresponding time, the value shall be 0xFFFFFFFE (no measured data).

Example: Cumulative amount of electric energy measured at fixed time (AC input)

- YYYY=0x07E5(2021), MM=0x0C(12), DD=0x1F(31)
- hh=0x17(23),mm=0x1E(30), ss=0x00(0)
- Cumulative amount of electric energy (AC input)=0x075BCD15 (123456789)



© 2000 - 2023 ECHONET Consortium

With the condition Unit for cumulative amount of electric energy (EPC=0xD4) = 0x02 (0.01kWh)

・Measurement date December 31, 2021

・Time of measurement: 23:30:00

・Measured cumulative amount of electric energy (AC input)

123456789 × 0.01 kWh = 1,234,567.89 kWh

(19) Cumulative amount of electric energy measured at fixed time (AC output)

This property indicates the most recent cumulative amount of electric energy measured at fixed time (AC input) out of measured data at every 30 minutes (at 00 and 30 minutes every hour) (not a cumulative value over 30-minutes) held by power generating unit, etc., in 4 bytes for date of measurement, 3 bytes for time of measurement, and 4 bytes for cumulative electric energy (AC output). The date of measurement shall be indicated in the format of two bytes for year, one byte for month, and one byte for day. The time of measurement shall be indicated in the format of one byte for hour, one byte for minute, and one byte for second. If power generating devices, etc. do not have information on seconds as a unit of measured time, 0x00 shall be set for seconds. The unit is indicated by the unit for cumulative amount of electric energy property (EPC=0xD4). The property value range is 0x00000000 to 0x3B9AC9FF (0 to 99,999,999), and when the value of cumulative amount of electric energy exceeds the maximum value of the value range, the value shall be increased again from 0x00000000(0). .If there is no measured data at the corresponding time, the value shall be 0xFFFFFFFE (no measured data).

(20) Cumulative amount of electric energy measured at fixed time (independent output)

This property indicates the most recent cumulative amount of electric energy measured at fixed time (AC output) out of measured data at every 30 minutes (at 00 and 30 minutes every hour) (not a cumulative value over 30-minutes) held by power generating device, etc., in 4 bytes for date of measurement, 3 bytes for time of measurement, and 4 bytes for cumulative electric energy (output during a power outage). The date of measurement is indicated in the format of two bytes for year, one byte for month, and one byte for day. The time of measurement is indicated in the format of one byte for hour, one byte for minute, and one byte for second. If power generating units, etc. do not have information on seconds as a unit of measured time, 0x00 shall be set for seconds. The unit is indicated by the unit for cumulative amount of electric energy property (EPC=0xD4). The property value range is 0x00000000 to 0x3B9AC9FF (0 to 99,999,999), and when the value of cumulative amount of electric energy exceeds the maximum value of the value range, the value shall be increased again from 0x00000000(0). If there is no measured data at the corresponding time, the value shall be 0xFFFFFFFE (no measured data).



© 2000 - 2023 ECHONET Consortium

(21) Measured instantaneous electric power (AC input/output)

This property indicates the measured effective instantaneous electric power of AC input/output in W. The value range is from 0x80000001 to 0x7FFFFFFD (from -2147483647 to 2147483645).

Underflow:0x80000000

Overflow :0x7FFFFFFF

No measured data:0x7FFFFFFE

(22) Measured instantaneous electric power (independent output)

This property indicates the measured effective instantaneous electric power of output during a power outage in W. The value range is from 0x80000001 to 0x7FFFFFFD (from -2147483647 to 2147483645).

: Underflow:0x80000000

Overflow :0x7FFFFFFF

No measured data:0x7FFFFFFE



© 2000 - 2023 ECHONET Consortium

# 3. 3. 32 Requirements for general lighting class

Class group code : 0x02
Class code : 0x90
Instance code : 0x01–0x7F (0x00: All-instance specification code)

| Property name | EPC | Contents of property<br>Value range (decimal notation) | Data type | Data size | Unit | Access rule | Man-datory | Announce-ment at status change | Remark |
|---|---|---|---|---|---|---|---|---|---|
| Operation status | 0x80 | This property indicates the ON/OFF status.<br>ON=0x30, OFF=0x31 | unsigned char | 1 byte | — | Set<br>Get | ○<br>○ | ○ | |
| Illuminance level | 0xB0 | This property indicates illuminance level in %.<br>0x00–0x64 (0–100%) | unsigned char | 1 byte | % | Set/Get | | | |
| Light color setting | 0xB1 | This property indicates the color setting.<br>Incandescent lamp color = 0x41, white = 0x42, daylight white = 0x43, daylight color = 0x44, other = 0x40, setting unknown = 0xFD | unsigned char | 1 byte | — | Set/Get | | | |
| Illuminance level step setting | 0xB2 | Used to specify the illuminance level in terms of steps and acquire the current setting.<br>From 0x01 to the maximum specifiable illuminance level value (dark to bright) | unsigned char | 1 byte | — | Set/ Get | | | |
| Light color step setting | 0xB3 | Used to specify the light color in terms of steps and acquire the current setting.<br>From 0x01 to the maximum specifiable light color value (incandescent lamp color to white) | unsigned char | 1 byte | — | Set/ Get | | | |
| Maximum specifiable values | 0xB4 | Used to acquire the maximum specifiable illuminance level value and the maximum specifiable light color value of main lighting.<br>Byte 1: illuminance<br>Byte 2: light color<br>0x01–0xFF (Step 1–Step 255)<br>0x00 (when the function is not implemented) | unsigned char × 2 | 2 bytes | — | Get | | | |



© 2000 - 2023 ECHONET Consortium

| | | | | | | | | | |
|---|---|---|---|---|---|---|---|---|---|
| Maximum value of settable level for night lighting | 0xB5 | Used to acquire the maximum values of illuminance and light color settable levels for night lighting.<br>First byte: illuminance<br>Second byte: light color<br>0x01–0xFF (Step 1–Step 255)<br>0x00 (when the function is not implemented) | unsigned char × 2 | 2 bytes | — | Get | | | |
| Lighting mode setting | 0xB6 | Automatic/main lighting/night lighting/color lighting<br>Automatic=0x41, main lighting=0x42, night lighting=0x43, color lighting=0x45 | unsigned char | 1 byte | — | Set/ Get | ○ | | |
| Illuminance level setting for main lighting | 0xB7 | Indicates the illuminance level of main lighting in %.<br>0x00–0x64(0–100%) | unsigned char | 1 byte | % | Set/ Get | | | |
| Illuminance level step setting for main lighting | 0xB8 | Used to set the illuminance level by the number of steps for main lighting and to acquire the current setting.<br>0x01 to the maximum value of settable illuminance level (dark to bright) | unsigned char | 1 byte | — | Set/ Get | | | |
| Illuminance level setting for night lighting | 0xB9 | Indicates the illuminance level of night lighting in %.<br>0x00–0x64 (0–100%) | unsigned char | 1 byte | % | Set/ Get | | | |
| Illuminance level step setting for night lighting | 0xBA | Used to set the illuminance level by the number of steps for night lighting and to acquire the current setting status.<br>0x01 to the maximum value of settable illuminance level (dark to bright) | unsigned char | 1 byte | — | Set/ Get | | | |
| Light color setting for main lighting | 0xBB | Used to set the light color for main lighting.<br>Incandescent lamp color ＝ 0x41, white ＝ 0x42, daylight white＝0x43, daylight color＝ 0x44, other=0x40 | unsigned char | 1 byte | — | Set/ Get | | | |
| Light color level step setting for | 0xBC | Used to set the light color level by the number of steps for main lighting and to acquire the current setting. | unsigned char | 1 byte | — | Set/Get | | | |



© 2000 - 2023 ECHONET Consortium

| | | | | | | | | | |
|---|---|---|---|---|---|---|---|---|---|
| main lighting | | 0x01to the maximum value of settable light color level (incandescent lamp color to white) | | | | | | | |
| Light color setting for night lighting | 0xBD | Used to set the light color for night lighting.<br>incandescent lamp color=0x41, white=0x42, daylight white=0x43, daylight color=0x44 | unsigned char | 1 byte | — | Set/ Get | | | |
| Light color level step setting for night lighting | 0xBE | Used to set the light color level by the number of steps for night lighting and to acquire the current setting.<br>0x01 to the maximum value of settable light color level (incandescent lamp color to white) | unsigned char | 1 byte | — | Set/ Get | | | |
| Lighting mode status in automatic mode | 0xBF | Used to acquire the current lighting mode in automatic mode.<br>main lighting=0x42, night lighting=0x43, off=0x44, color lighting=0x45 | unsigned char | 1 byte | — | Get | | | |
| RGB setting for color lighting | 0xC0 | Used to set the RGB value for color lighting and to acquire the current setting.<br>Byte 1: R<br>Byte 2: G<br>Byte 3: B<br>0x00–0xFF (0–255)<br>Minimum brightness=0x00, maximum brightness=0xFF | unsigned char × 3 | 3 bytes | — | Set/ Get | | | |
| ON timer reservation setting | 0x90 | Reservation ON/OFF<br>Reservation ON=0x41,<br>Reservation OFF=0x42 | unsigned char | 1 byte | — | Set/Get | | | |
| ON timer setting | 0x91 | Timer value HH:MM<br>0–0x17: 0–0x3B<br>(=0–23):(=0–59) | unsigned char × 2 | 2 bytes | — | Set/Get | | | |
| OFF timer reservation setting | 0x94 | Reservation ON/OFF<br>Reservation ON=0x41,<br>Reservation OFF=0x42 | unsigned char | 1 byte | — | Set/Get | | | |
| OFF timer setting | 0x95 | Timer value HH:MM<br>0–0x17: 0–0x3B<br>(=0–23):(=0–59) | unsigned char × 2 | 2 bytes | — | Set/Get | | | |

Note: In the “Announcement at status change” column, ○ denotes mandatory processing when the



© 2000 - 2023 ECHONET Consortium

property is implemented.

(1) Operation status (inherited from the device object super class property)

Operation status ON

When the illuminance level property (0xB0, 0xB2) does not exist: Illuminated.

When the illuminance level property (0xB0, 0xB2) exists: The illuminance level is reflected in the lighting device's illuminance.

When the “Lighting mode setting” property (0xB6) has Automatic mode (0x41), the lighting may be off in Automatic mode.

Operation status OFF

Extinguished.

(2) Illuminance level

This property indicates the illuminance level of lighting in % in the current lighting mode setting. This property is used to set the illuminance level and to acquire the current setting. If the illuminance level setting of the actual device is smaller or greater than the property value in %, the value of the actual device shall be assigned to this property.

When this property and the “Illuminance level step setting” property (0xB2) are implemented, their values must be associated with each other.

The Illuminance level setting indicated by this property is that of the actual device when the “Lighting mode setting” property (0xB6) does not have the Automatic function (0x41) or when the function is implemented but the lighting mode setting is Main lighting (0x42) or Night lighting (0x43). When the lighting mode setting is Automatic (0x41), the illuminance level setting at the time of acquisition is recommended. Since the illuminance level setting indicated by this property is unknown in the Automatic status, the property value shall be 0xFD (setting unknown).

Even when the “Operation status” property (0x80) is OFF (0x31), the effectiveness of this property shall be guaranteed.

(3) Light color setting

This property is used to set a light color (incandescent lamp color/white/daylight white/daylight color/other) of lighting in the current "Lighting mode setting" and to acquire the current setting. "Other" means a light color not belonging to any specified color. Only property values for functions supported by a device of this class may be implemented. For a device of this class not supporting the daylight white function, there is no need to implement 0x43 for daylight white. When this property and the "Light color step setting" property (EPC = 0xB3) are implemented, their values must be



© 2000 - 2023 ECHONET Consortium

associated with each other.

The light color setting indicated by this property is that of the actual device when the "Lighting mode setting" property (0xB6) does not have the Automatic function (0x41) or when the function is implemented but the lighting mode setting is Main lighting (0x42) or Night lighting (0x43). When the lighting mode setting is Automatic (0x41), the lighting mode setting at the time of acquisition is recommended. Since the light color setting indicated by this property is unknown in the Automatic status, the property value shall be 0xFD (setting unknown).

Even when the "Operation status" property (0x80) is OFF (0x31), the effectiveness of this property shall be guaranteed.

(4) Illuminance level step setting

This property indicates the illuminance level of lighting in the current "Lighting mode setting" by the number of steps. This property is also used to set the illuminance level and to acquire the current setting. The maximum value of settable illuminance level is acquired by the "Maximum specifiable values" property (EPC = 0xB4) and the "Maximum value of settable level for night lighting " property (EPC = 0xB5). No actual value is specified for illuminance level. However, the illuminance decreases as the level setting becomes smaller and increases as it becomes greater. Only property values for functions supported by a device of this class may be implemented. When this property and the "Illuminance level" property (EPC = 0xB0) are implemented, their values must be associated with each other. With this property, the "Maximum specifiable values" property (0xB4) must be implemented. When the "Night lighting" function (0x43) of the "Lighting mode setting" property (0xB6) is implemented, the "Maximum value of settable level for night lighting" property (0xB5) must also be implemented.

The illuminance level step setting indicated by this property is that of the actual device when the "Lighting mode setting" property (0xB6) does not have the Automatic function (0x41) or when the function is implemented but the lighting mode setting is Main lighting (0x42) or Night lighting (0x43). When the lighting mode setting is Automatic (0x41), the illuminance level step setting at the time of acquisition is recommended. Since the illuminance level step setting indicated by this property is unknown in the Automatic status, the property value shall be 0x00 (setting unknown).

Even when the "Operation status" property (0x80) is OFF (0x31), the effectiveness of this property shall be guaranteed.

(5) Light color step setting

This property indicates the light color level of lighting in the current "Lighting mode setting" by the number of steps. This property is also used to set the light color and to acquire the current setting. The maximum value of settable light color level is acquired by the "Maximum specifiable values"



© 2000 - 2023 ECHONET Consortium

property (EPC = 0xB4) and the "Maximum value of settable level for night lighting" property (EPC = 0xB5). No actual value is specified for light color level. However, the light color becomes closer to incandescent lamp color as the level setting becomes smaller and closer to white as it becomes greater. Only property values for functions supported by a device of this class may be implemented. When this property and the "Light color setting" property (EPC = 0xB1) are implemented, their values must be associated with each other. With this property, the "Maximum specifiable values" property (0xB4) must be implemented. When the "Night lighting" function (0x43) of the "Lighting mode setting" property (0xB6) is implemented, the "Maximum value of settable level for night lighting" property (0xB5) must also be implemented.

The light color step setting indicated by this property is that of the actual device when the "Lighting mode setting" property (0xB6) does not have the Automatic function (0x41) or when the function is implemented but the lighting mode setting is Main lighting (0x42) or Night lighting (0x43). When the lighting mode setting is Automatic (0x41), the light color level step setting at the time of acquisition is recommended. Since the light color level step setting indicated by this property is unknown in the Automatic status, the property value shall be 0x00 (setting unknown).

Even when the "Operation status" property (0x80) is OFF (0x31), the effectiveness of this property shall be guaranteed.

(6) Maximum specifiable values

Used to acquire the maximum specifiable illuminance level and light color values for main lighting. This is a 2-byte property. The first byte represents the maximum specifiable illuminance level step value, and the second byte represents the maximum specifiable light color step value. Each of the 2 bytes indicates the respective maximum specifiable value using a 255-step scale (0x01 to 0xFF). The maximum specifiable value for an unimplemented function shall be 0x00.

(7) Maximum value of settable level for night lighting

Used to acquire the maximum specifiable illuminance level and light color values for night lighting. This is a 2-byte property. The first byte represents the maximum specifiable illuminance level step value, and the second byte represents the maximum specifiable light color step value. Each of the 2 bytes indicates the respective maximum specifiable value using a 255-step scale (0x01 to 0xFF). The maximum specifiable value for an unimplemented function shall be 0x00.

(8) Lighting mode setting

This property is used to set automatic, main lighting, night lighting, or color lighting and to acquire the current setting.

Automatic (0x41): The lighting instrument automatically selects main lighting or night lighting and



© 2000 - 2023 ECHONET Consortium

controls illuminance level setting, illuminance level step setting, light color setting, or light color level step setting by using illuminance sensors and automatic dimming algorithms.

Main lighting (0x42): The main light is lit.

Night lighting (0x43): Not the main light but a night light (such as a midget lamp) is lit.

Color lighting (0x45): Color lights are lit.

Only property values for functions supported by a device of this class may be implemented. For a device of this class not supporting the automatic function, there is no need to implement 0x41 for automatic.

(9) Illuminance level setting for main lighting

This property indicates the illuminance level in % when the "Lighting mode setting" property (EPC = 0xB6) is set to main lighting. This property is also used to set the illuminance level and to acquire the current setting. If the illuminance level setting of the actual device is smaller or greater than the property value in %, the value of the actual device shall be assigned to this property.

This property allows setting and acquisition even when the "Lighting mode setting" property (0xB6) is set to other than main lighting mode. When this property and the "Illuminance level step setting for main lighting" property (0xB8) are implemented, their values must be associated with each other.

Even when the "Operation status" property (0x80) is OFF (0x31), the effectiveness of this property shall be guaranteed.

(10) Illuminance level step setting for main lighting

This property indicates the illuminance level by the number of steps when the "Lighting mode setting" property (EPC = 0xB6) is set to main lighting. This property is also used to set the illuminance level and to acquire the current setting. The maximum value of settable illuminance level is acquired by the "Maximum specifiable values" property (EPC = 0xB4). No actual value is specified for illuminance level. However, the illuminance decreases as the level setting becomes smaller and increases as it becomes greater. Only property values for functions supported by a device of this class may be implemented. When this property and the "Illuminance level setting for main lighting" property (EPC = 0xB7) are implemented, their values must be associated with each other. With this property, the "Maximum specifiable values" property (0xB4) must be implemented.

This property allows setting and acquisition even when the "Lighting mode setting" property (0xB6) is set to other than main lighting mode.

Even when the "Operation status" property (0x80) is OFF (0x31), the effectiveness of this property shall be guaranteed.

(11) Illuminance level setting for night lighting



© 2000 - 2023 ECHONET Consortium

This property indicates the illuminance level in % when the "Lighting mode setting" property (EPC = 0xB6) is set to night lighting mode. This property is also used to set the illuminance level and to acquire the current setting. If the illuminance level setting of the actual device is smaller or greater than the property value in %, the value of the actual device shall be assigned to this property.

This property allows setting and acquisition even when the "Lighting mode setting" property (0xB6) is set to other than night lighting mode. When this property and the "Illuminance level step setting in night lighting mode" property (0xBA) are implemented, their values must be associated with each other.

Even when the "Operation status" property (0x80) is OFF (0x31), the effectiveness of this property shall be guaranteed.

(12) Illuminance level step setting for night lighting

This property indicates the illuminance level by the number of steps when the "Lighting mode setting" property (EPC = 0xB6) is set to night lighting. This property is also used to set the illuminance level and to acquire the current setting. The maximum value of settable illuminance level is acquired by the "Maximum value of settable level for night lighting" property (EPC = 0xB5). No actual value is specified for illuminance level. However, the illuminance decreases as the level setting becomes smaller and increases as it becomes greater. Only property values for functions supported by a device of this class may be implemented. When this property and the "Illuminance level setting for night lighting" property (EPC = 0xB9) are implemented, their values must be associated with each other. With this property, the "Maximum value of settable level for night lighting" property (0xB5) must also be implemented.

This property allows setting and acquisition even when the "Lighting mode setting" property (0xB6) is set to other than night lighting mode.

Even when the "Operation status" property (0x80) is OFF (0x31), the effectiveness of this property shall be guaranteed.

(13) Light color setting for main lighting

This property is used to set a light color (incandescent lamp color0x41/white0x42/daylight white0x43/daylight color0x44/other0x40) when the "Lighting mode setting" property (EPC = 0xB6) is set to main lighting and to acquire the current setting. "Other" means a light color not belonging to any specified color. Only property values for functions supported by a device of this class may be implemented. For a device of this class not supporting the daylight white function, there is no need to implement 0x43 for daylight white.

This property allows setting and acquisition even when the "Lighting mode setting" property (0xB6) is set to other than main lighting mode. When this property and the "Light color level step setting



© 2000 - 2023 ECHONET Consortium

for main lighting" property (0xBC) are implemented, their values must be associated with each other. Even when the "Operation status" property (0x80) is OFF (0x31), the effectiveness of this property shall be guaranteed.

(14) Light color level step setting for main lighting

This property indicates the light color level by the number of steps when the "Lighting mode setting" property (EPC = 0xB6) is set to main lighting. This property is also used to set the light color level and to acquire the current setting. The maximum value of settable light color level is acquired by the "Maximum specifiable values" property (EPC = 0xB4). No actual value is specified for light color level. However, the light color becomes closer to incandescent lamp color as the level setting becomes smaller and closer to white as it becomes greater. Only property values for functions supported by a device of this class may be implemented. Whenever this property is implemented, the "Maximum specifiable values" property (EPC = 0xB4) shall also be implemented.

This property allows setting and acquisition even when the "Lighting mode setting" property (0xB6) is set to other than main lighting mode. When this property and the "Light color setting for main lighting" property (0xBB) are implemented, their values must be associated with each other.

Even when the "Operation status" property (0x80) is OFF (0x31), the effectiveness of this property shall be guaranteed.

(15) Light color setting for night lighting

This property is used to set a light color (incandescent lamp color0x41/white0x42/daylight white0x43/daylight color0x44/other0x40) when the "Lighting mode setting" property (EPC = 0xB6) is set to night lighting and to acquire the current setting. "Other" means a light color not belonging to any specified color. Only property values for functions supported by a device of this class may be implemented. For a device of this class not supporting the daylight white function, there is no need to implement 0x43 for daylight white.

This property allows setting and acquisition even when the "Lighting mode setting" property (0xB6) is set to other than night lighting mode. When this property and the "Light color level step setting for night lighting" property (0xBE) are implemented, their values must be associated with each other.

Even when the "Operation status" property (0x80) is OFF (0x31), the effectiveness of this property shall be guaranteed.

(16) Light color level step setting for night lighting

This property indicates the light color level by the number of steps when the "Lighting mode setting" property (EPC = 0xB6) is set to night lighting. This property is also used to set the light color level and to acquire the current setting. The maximum value of settable light color level is acquired by the



© 2000 - 2023 ECHONET Consortium

"Maximum value of settable level for night lighting" property (EPC = 0xB5). No actual value is specified for light color level. However, the light color becomes closer to incandescent lamp color as the level setting becomes smaller and closer to white as it becomes greater. Only property values for functions supported by a device of this class may be implemented. Whenever this property is implemented, the "Maximum value of settable level for night lighting " property (0xB5) shall also be implemented.

This property allows setting and acquisition even when the "Lighting mode setting" property (0xB6) is set to other than night lighting mode. When this property and the "Light color setting for night lighting" property (0xBD) are implemented, their values must be associated with each other.

Even when the "Operation status" property (0x80) is OFF (0x31), the effectiveness of this property shall be guaranteed.

(17) Lighting mode status in automatic mode

This property is used to acquire the lighting status of an actual device when the "Lighting mode setting" property (EPC = 0xB6) is set to automatic (0x41), main lighting (0x42), night lighting (0x43), off (0x44), or color lighting (0x45).

Only property values for functions supported by a device of this class may be implemented. For a device of this class not supporting the night lighting function, there is no need to implement 0x43 for night lighting.

(18) RGB setting for color lighting

This property is used to set the RGB value when the "Lighting mode setting" property (EPC = 0xB6) is set to color lighting (0x45) and to acquire the current setting. No actual value is specified for RGB. Only property values for functions supported by a device of this class may be implemented. If the RGB setting by this property is not acceptable, the closest acceptable value is set. This property allows setting and acquisition even when the "Lighting mode setting" property (0xB6) is set to other than color lighting mode (0x45).

(19) ON timer reservation setting

Specifies whether the ON timer reservation is ON or OFF. This property shall be related to the “ON timer setting” property.

Reservation ON=0x41; reservation OFF=0x42

This property shall be effective even when the value of the “Operation status” property (0x80) is OFF (0x31).

(20) ON timer setting



© 2000 - 2023 ECHONET Consortium

This property indicates when the setting of the “ON timer reservation setting” property is “ON,” the time at which the device will be turned on. The “hour (0x00 to 0x17 (0 to 23)) : minute (0x00 to 0x3B (0 to 59))” format shall be used, with the higher- and lower-order bytes used for the “hour” and “minute” values, respectively.

This property shall be effective even when the value of the “Operation status” property (0x80) is OFF (0x31).

(21) OFF timer reservation setting

Specifies whether the OFF timer reservation is ON or OFF. This property shall be related to the “OFF timer setting” property.

Reservation ON=0x41; reservation OFF=0x42

This property shall be effective even when the value of the “Operation status” property (0x80) is OFF (0x31).

(22) OFF timer setting

This property indicates when the setting of the “OFF timer reservation setting” property is “ON,” the time at which the device will be turned off. The “hour (0x00 to 0x17 (0 to 23)) : minute (0x00 to 0x3B (0 to 59))” format shall be used, with the higher- and lower-order bytes used for the “hour” and “minute” values, respectively.

This property shall be effective even when the value of the “Operation status” property (0x80) is OFF (0x31).



© 2000 - 2023 ECHONET Consortium

# 3. 3. 33 Requirements for mono functional lighting class

Class group code : 0x02

Class code : 0x91

Instance code : 0x01–0x7F (0x00: All-instance specification code)

| Property name | EPC | Contents of property | Data type | Data size | Unit | Access rule | Man-datory | Announce-ment at status change | Remark |
|---|---|---|---|---|---|---|---|---|---|
| | | Value range (decimal notation) | | | | | | | |
| Operation status | 0x80 | This property indicates the ON/OFF status. | unsigned char | 1 byte | — | Set | ○ | ○ | |
| | | ON=0x30, OFF=0x31 | | | | Get | ○ | | |
| Illuminance level setting | 0xB0 | This property indicates illuminance level in %. | unsigned char | 1 byte | % | Set/Get | | | |
| | | 0x00 – 0x64 (0 – 100%) | | | | | | | |

Note: In the “Announcement at status change” column, ○ denotes mandatory processing when the property is implemented.

This class is used for lighting not supported by general lighting class requirements.

Operation status settings of ON (when switched on) / OFF (when extinguished) are possible, irrespective of the lighting mode.

(1) Operation status (inherited from the device object super class property)

This property indicates whether the status of lighting devices is ON (switched on) or OFF (extinguished).

(2) Illuminance level setting

This property indicates the current illuminance level of lighting in %. This property is used to set the illuminance level and to acquire the current setting. If the illuminance level setting of the actual device is smaller or greater than the property value in %, the value of the actual device must be assigned to the property value in % required for this property.

Even when the operation status property (0x80) is OFF (0x31), the effectiveness of this property shall be guaranteed.



© 2000 - 2023 ECHONET Consortium

# 3．3．34 Requirements for lighting for solid light-emitting source class

Class group code : 0x02

Class code : 0x92

Instance code : 0x01–0x7F (0x00: All-instance specification code)

| Property name | EPC | Contents of property<br>Value range (decimal notation) | Data type | Data size | Unit | Access rule | Man-datory | Announce-ment at status change | Remark |
|---|---|---|---|---|---|---|---|---|---|
| Operation status | 0x80 | This property indicates the ON/OFF status of the light source as a whole<br>ON=0x30, OFF=0x31 | unsigned char | 1 byte | — | Set<br>Get | ○<br>○ | ○ | |
| Number of light sources | 0xB1 | This property indicates the number of light sources.<br>0x01-0xFD (1-253) | unsigned char | 1 byte | — | Get | ○ | | |
| List of the light source operation status | 0xB2 | This individually lists the ON/OFF status of the light sources.<br>ON ＝ 0x30, OFF ＝ 0x31, setting unknown=0xFE, setting value not reflected=0xFF | unsigned char× (MIN1-MAX253) | Max 253 bytes | — | Set/ Get | ○ | ○ | |
| List of the light source optical output setting values | 0xB3 | This individually lists optical outputs of the light sources in units of maximum power ratio (%).<br>0x00-0x64 (0-100%), setting unknown=0xFE, setting value not reflected=0xFF | unsigned char× (MIN1-MAX253) | Max 253 bytes | % | Set/ Get | ○ | | |
| List of light source color temperature setting values | 0xB4 | This individually lists color temperature of the light sources in unit of kelvin (unit: 50 K).<br>0x01 (50 K)-0xFD (1,2650 K), setting unknown=0xFE, setting value not reflected=0xFF | unsigned char× (MIN1-MAX253) | Max 253 bytes | 50K | Set/ Get | | | |
| ON timer reservation setting | 0x90 | Reservation ON/OFF<br>Reservation ON=0x41, Reservation OFF=0x42 | unsigned char | 1 byte | — | Set/ Get | | | |
| ON timer setting | 0x91 | Timer value (HH:MM)<br>0-0x17: 0-0x3B (=0-23): (=0-59) | unsigned char ×2 | 2 bytes | — | Set/ Get | | | |
| OFF timer reservation setting | 0x94 | Reservation ON/OFF<br>Reservation ON=0x41, Reservation OFF=0x42 | unsigned char | 1 byte | — | Set/ Get | | | |
| OFF timer setting | 0x95 | Timer value (HH:MM)<br>0-0x17: 0-0x3B (=0-23): (=0-59) | unsigned char ×2 | 2 bytes | — | Set/ Get | | | |

Note 1: In the “announcement at status change” column, ○ denotes mandatory processing when the property is implemented.

Solid light-emitting sources (e.g. LEDs or laser light sources) can emit a variety of lights in combination with light-emitting devices and phosphor. As they can greatly change color and brightness by controlling light outputs that are created by synthesizing light sources with a variety of colors, their market penetration is expected to rapidly rise in near future. The figure below shows actual implementation cases from the solid light-emitting source class. As a type, multiple light sources are connected to a single instance. The figure below shows an example where multiple instances are connected; however, a single instance is also



© 2000 - 2023 ECHONET Consortium

acceptable.

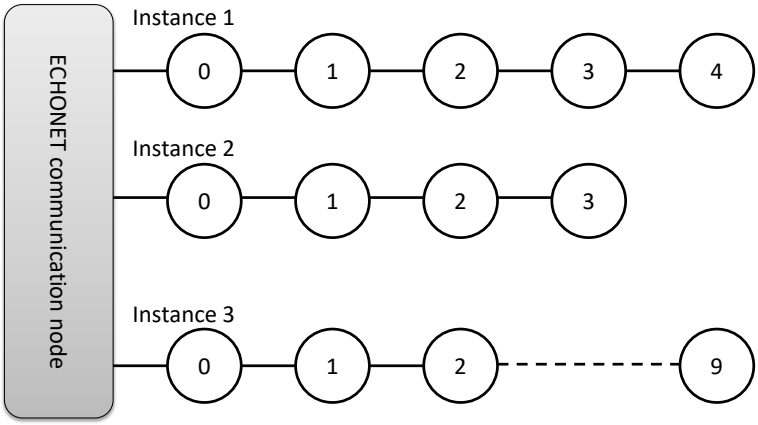


Note that the lighting will be completely dark when it is turned off using the controller, which may create safety concerns. Therefore, it is necessary to take into consideration the safety operation of the lighting setting.

(1) Operation status (inherited from the device object super class property)

This property indicates whether the lighting (overall light source) is turned on (ON state) or turned off (OFF state). For Set, ON/OFF for the light sources as a whole shall be designated. For Get, when one or more light sources are turned on, the light source shall respond in the ON state, while responding with OFF when all light sources are turned off.

(2) Number of light sources

This property indicates number of the target light sources. Possible values shall be 1 through 253.

(3) List of the light source operation status

This property indicates the On/Off states for N light sources in a list form. The list is composed of one or more, up to N arraignment data[ ] (the size of each element is 1 byte). The data[0] indicates the operation status of the 1st light source, while the data [N-1] indicates the operation status of the Nth light source. If the status in the “ith” light source cannot be acquired due to a failure, data[i-1] shall be 0xFE (setting value unknown). The operation status value for each light source to be responded when receiving a read request shall be listed in either value of 0x30 (ON), 0x31 (OFF), or 0xFE (setting unknown).

When setting this property value, operation status values for all light sources from data[0] to data[N-1] shall be written. In this case, 0xFF (setting value not reflected) shall be set for the light sources that do not change the operation status value, instead of the values of 0x30 (ON) and 0x31 (OFF). For example,



© 2000 - 2023 ECHONET Consortium

if designating the ON or OFF state only for the “ith” light source and not making particular changes for other light sources when setting the value, 0xFF shall be designated as values of all elements excluding data[i-1].

The table below shows the examples of the relevant list when operating Get. The optical output setting value of the 1st, 3rd, and 5th light source is turned on, while the 2nd light source is turned off, and 4th light source setting is unknown.

| | data[0] | data[1] | data[2] | data[3] | data[4] |
|---|---|---|---|---|---|
| Light source operation status | 0x30 | 0x31 | 0x30 | 0xFE | 0x30 |

The table below shows the examples of the relevant list when operating Set. The 1st and 3rd light sources are turned off.

| | data[0] | data[1] | data[2] | data[3] | data[4] |
|---|---|---|---|---|---|
| Light source operation status | 0x31 | 0xFF | 0x31 | 0xFF | 0xFF |

(4) List of the light source optical output setting values

This property indicates current optical output of the light sources in unit of maximum power ratio (%) for the N light sources in a list form. The list is composed of one or more, up to N arrangement data[ ] (the size of each element is 1 byte). The data[0] indicates the optical output setting value of the 1st light source, while the data [N-1] indicates the optical output setting value of the Nth light source. If the optical output setting value in the “ith” light source cannot be acquired due to failure, data[i-1] shall be 0xFE (setting value unknown). The optical output setting value for each light source to be responded when receiving a read request shall be listed in either value of 0x00-0x64 (0-100%) or 0xFE (setting unknown).

When setting this property value, optical output setting values for all light sources from data[0] to data[N-1] shall be written. In this case, 0xFF (setting value not reflected) shall be set for the light sources not changing the optical output setting value, instead of values of 0x00-0x64 (0-100%). For example, if designating optical output setting value only for the “ith” light source and not making particular changes for other light sources when setting the value, 0xFF shall be designated as values of all elements excluding data[i-1]. If the optical output setting of the actual device is lower or higher than the % unit, the property of the actual device shall be assigned to the property value of % unit specified in this property. This property shall be effective even when the value of the "Operation status” property (0x80) is OFF (0x31).

The table below shows the examples of the relevant list when operating Get. The optical output setting value of the 1st, 3rd, and 5th light source is 20%, while that of the 2nd light source is 100%, and that of



© 2000 - 2023 ECHONET Consortium

the 4th light source setting is unknown.

| | data[0] | data[1] | data[2] | data[3] | data[4] |
|---|---|---|---|---|---|
| Light source optical output setting value | 0x14 | 0x64 | 0x14 | 0xFE | 0x14 |

The table below shows the examples of the relevant list when operating Set. The optical output setting value of 1st and 3rd light sources is 100%.

| | data[0] | data[1] | data[2] | data[3] | data[4] |
|---|---|---|---|---|---|
| Light source optical output setting value | 0x64 | 0xFF | 0x64 | 0xFF | 0xFF |

(5) List of light source color temperature setting values

This property indicates current color temperature of the light sources in kelvin (unit: 50K) for the N light sources in a list form. The list is composed of one or more, up to N arraignment data[ ](the size of each element is 1 byte). The data[0] indicates the color temperature setting value of the 1st light source, while the data [N-1] indicates the color temperature setting value of the Nth light source. If the color temperature setting value in the “ith” light source cannot be acquired due to failure, data[i-1] shall be 0xFE (setting value unknown). The color temperature setting values for each light source to be responded when receiving a read request shall be listed in either value of 0x01 (50 K)-0xFD (12650 K) or 0xFE (setting unknown).

When setting this property value, color temperature setting values for all light sources from data[0] to data[N-1] shall be written. In this case, 0xFF (setting value not reflected) shall be set for the light sources not changing the color temperature setting value, instead of values of 0x01 (50K)-0xFD (12650K). For example, if designating color temperature setting value only for the “ith” light source and not making particular changes for other light sources when setting the value, 0xFF shall be designated as values of all elements excluding data[i-1].

This property indicates that the color temperature setting value is the color temperature setting value of the actual devices. This property shall be effective even when the value of the "Operation status” property (0x80) is OFF (0x31). For example, under JIS Z 8725, the lower limit value of the color temperature is 1563 K, while the upper limit value of the color temperature is infinite.

The table below shows the examples of the relevant list when operating Get. The color temperature setting value of the 1st, 3rd, and 5th light source is 3000 K, while that of the 2nd light source is 5000 K, and that of the 4th light source setting is unknown.

| | data[0] | data[1] | data[2] | data[3] | data[4] |
|---|---|---|---|---|---|
| Light source color temperature setting | 0x3C | 0x64 | 0x3C | 0xFE | 0x3C |



© 2000 - 2023 ECHONET Consortium

| | | | | | |
|---|---|---|---|---|---|
| value | | | | | |

The table below shows the examples of the relevant list when operating Set. The color temperature setting value of the 1st and 3rd light sources is 5000 K.

| | data[0] | data[1] | data[2] | data[3] | data[4] |
|---|---|---|---|---|---|
| Light source color temperature setting value | 0x64 | 0xFF | 0x64 | 0xFF | 0xFF |

(6) ON timer reservation setting

Reservation for on and off for the ON timer shall be set. This property relates to “ON timer setting” property.

Reservation ON=0x41, reservation OFF=0x42

This property shall be effective even when the value of the "Operation status” property (0x80) is OFF (0x31).

(7) ON timer setting

This property indicates the time when “ON timer reservation setting” property is turned on; hour: 0x00-0x17 (0-23) and minute: 0x00-0x3B (0-59). The higher- and lower-order bytes shall be used for the "hour” and "minute” values, respectively.

This property shall be effective even when the value of the "Operation status” property (0x80) is OFF (0x31).

(8) OFF timer reservation setting

Reservation on and off for the OFF timer shall be set. This property relates to “OFF timer setting” property.

Reservation ON=0x41, reservation OFF=0x42

This property shall be effective even when the value of the "Operation status” property (0x80) is OFF (0x31).

(9) OFF timer setting

This property indicates the time when “OFF timer reservation setting” property is turned off; hour: 0x00-0x17 (0-23) and minute: 0x00-0x3B (0-59). The higher- and lower-order bytes shall be used for the "hour” and "minute” values, respectively.

This property shall be effective even when the value of the "Operation status” property (0x80) is OFF (0x31).



© 2000 - 2023 ECHONET Consortium

## 3. 3. 35 Requirements for buzzer class

Class group code : 0x02

Class code : 0xA0

Instance code : 0x01–0x7F (0x00: All-instance specification code)

| Property name | EPC | Contents of property | Data type | Data size | Unit | Access rule | Man-datory | Announce-ment at status change | Remark |
|---|---|---|---|---|---|---|---|---|---|
| | | Value range (decimal notation) | | | | | | | |
| Operation status | 0x80 | This property indicates the ON/OFF status. | unsigned char | 1 byte | — | Set | | ○ | |
| | | ON=0x30, OFF=0x31 | | | | Get | ○ | | |
| Sound generation setting | 0xB1 | This property indicates buzzer sound generation setting. | unsigned char | 1 byte | – | Set/Get | | | |
| | | Buzzer enabled = 0x41, buzzer disabled = 0x42 | | | | | | | |
| Buzzer sound type | 0xE0 | This property indicates 8 different types of buzzer sound. | unsigned char | 1 byte | – | Set/Get | | | |
| | | 0x31–0x38 | | | | | | | |

Note: In the “Announcement at status change” column, ○ denotes mandatory processing when the property is implemented.

(1) Operation status (inherited from the device object super class property)

This property indicates whether the function native to this class is operating or not (ON or OFF).

In the node mounting this class, if the function of this class starts operating concurrently with the start of node operation, this property may be implemented at a fixed value of 0x30 (operation status ON).

(2) Sound generation setting

This property indicates the buzzer sound generation setting.

The value 0x41 shall be used when the buzzer is enabled. The value 0x42 shall be used when the buzzer is disabled.

(3) Buzzer sound type

This property indicates the types of buzzer sound.

The relationship between specific values and sound types is not stipulated.



© 2000 - 2023 ECHONET Consortium

# 3. 3. 36 Requirements for electric vehicle charger class

Class group code : 0x02

Class code : 0xA1

Instance code : 0x01–0x7F (0x00: All-instance specification code)

| Property name | EPC | Contents of property<br>Value range (decimal notation) | Data type | Data size | Unit | Access rule | Man-datory | Announce-ment at status change | Remark |
|---|---|---|---|---|---|---|---|---|---|
| Operation status | 0x80 | This property indicates the ON/OFF status.<br>ON=0x30, OFF=0x31 | unsigned char | 1 byte | — | Set<br>Get | <br>○ | ○ | |
| Rated charge capacity | 0xC5 | This property indicates the rated charge capacity of an electric vehicle charger in W<br>0x00000000-0x3B9AC9FF (0-999,999,999W) | unsigned long | 4 bytes | W | Get | ○ | | |
| Vehicle connection and chargeable status | 0xC7 | This property indicates whether an electric vehicle charger can be charged<br>Undetermined = 0xFF<br>Vehicle not connected = 0x30<br>Connected to vehicle, Not chargeable = 0x40<br>Connected to vehicle, Chargeable = 0x41<br>Connected to vehicle, chargeable status unknown=0x44 | unsigned char | 1 byte | — | Get | ○ | ○ | |
| Minimum/maximum charging electric power | 0xC8 | This property indicates the minimum and maximum values of charging electric power to an electric vehicle charger, respectively, in W<br>0x00000000-0x3B9AC9FF (0-999,999,999W)<br>Minimum charging electric power : Maximum charging electric power | unsigned long ×2 | 8 bytes | W | Get | | | |
| Minimum/maximum charging current | 0xCA | This property indicates the minimum and maximum values of charging current to an electric vehicle charger, respectively, in units of 0.1A<br>0x0000-0x7FFE (0-3,276.6A)<br>Minimum charging current : Maximum charging current | unsigned short ×2 | 4 bytes | 0.1A | Get | | | |
| Charger type | 0xCC | This property indicates the type of electric vehicle charger<br>AC_CPLT = 0x11<br>AC_HLC (charging only) = 0x12<br>DC_type AA (charging only) = 0x21<br>DC_type BB (charging only) = 0x31<br>DC_type EE (charging only) = 0x41<br>DC_type FF (charging only) = 0x51 | unsigned char | 1 byte | — | Get | ○ | | Note 4 |
| Vehicle connection confirmation | 0xCD | This property confirms the connection status between an electric vehicle charger and a vehicle<br>Connection confirmation = 0x10 | unsigned char | 1 byte | — | Set | ○ | | Note 1 |



© 2000 - 2023 ECHONET Consortium

| | | | | | | | | | |
|---|---|---|---|---|---|---|---|---|---|
| Chargeable capacity of vehicle mounted battery | 0xCE | This property indicates the chargeable capacity of a vehicle battery connected to an electric vehicle charger in “Wh”.<br>0x00000000 to 0x3B9AC9FF (0 to 999,999,999 Wh) | Unsigned long | 4 bytes | Wh | Get | ○ | | Note 5 |
| Remaining chargeable capacity of vehicle mounted battery | 0xCF | This property indicates the remaining chargeable capacity of a vehicle battery connected to an electric vehicle charger in “Wh”.<br>0x00000000 to 0x3B9AC9FF (0 to 999,999,999 Wh) | Unsigned long | 4 bytes | Wh | Get | ○ | | Note 5 |
| Used capacity of vehicle-mounted battery 1 | 0xD0 | This property indicates the capacity of a vehicle-mounted battery of an electric vehicle connected to an electric vehicle charger in Wh<br>0x00000000-0x3B9AC9FF (0-999,999,999Wh) | unsigned long | 4 bytes | Wh | Get | ○ | | Note 2 |
| Rated voltage | 0xD2 | This property indicates the normal rated voltage of an electric vehicle charger in V<br>0x0000-0x7FFE (0-32,766V) | unsigned short | 2 bytes | V | Get | | | |
| Measured instantaneous charging electric power | 0xD3 | This property indicates the instantaneous charging electric power in W<br>0x00000000-0x3B9AC9FF (0-999,999,999W) | signed long | 4 bytes | W | Get | | | |
| Measured cumulative amount of charging electric energy | 0xD8 | This property indicates the cumulative amount of charging electric energy in units of 0.001kWh<br>0x00000000-0x3B9AC9FF (0-999,999.999kWh | unsigned long | 4 bytes | 0.001 kWh | Get | | | |
| Cumulative amount of charging electric energy reset setting | 0xD9 | This property resets the cumulative amount of charging electric energy<br>Reset = 0x00 | unsigned char | 1 byte | — | Set | | | |
| Operating mode setting | 0xDA | This property sets the operating mode (Charging / Standby / Idle / Other)<br>Charging = 0x42, Standby = 0x44, Idle = 0x47, Other = 0x40 | unsigned char | 1 byte | — | Set /Get | ○ | ○ | |
| Remaining stored electricity of vehicle-mounted battery 1 | 0xE2 | This property indicates the remaining stored electricity of a vehicle-mounted battery of an electric vehicle connected to an electric vehicle charger in Wh<br>0x00000000-0x3B9AC9FF (0-999,999,999Wh) | unsigned long | 4 bytes | Wh | Get | ○ | | Note 3 |
| Remaining stored electricity of vehicle-mounted battery 3 | 0xE4 | This property indicates the remaining stored electricity of a vehicle-mounted battery an electric vehicle connected to an electric vehicle charger in %<br>0x00-0x64 (0-100%) | unsigned char | 1 byte | % | Get | ○ | | Note 3 |
| Vehicle ID | 0xE6 | This property indicates the vehicle ID information of an electric vehicle connected to an electric vehicle charger. | Unsigned char | MAX 25 bytes | — | Get | ○ | | |



© 2000 - 2023 ECHONET Consortium

| | | | | | | | | | |
|---|---|---|---|---|---|---|---|---|---|
| | | First byte (data size for vehicle ID information): 0x01 through 0x18 (1-24). 0x00 if no vehicle ID is available.<br>Second and succeeding bytes (vehicle ID information): data specified for each vehicle. No second and succeeding bytes exist if no vehicle ID information is available. | | | | | | | |
| Charging amount setting | 0xE7 | This property specifies the charging electric energy in "Wh".<br>0x00000000 to 0x3B9AC9FF (0 to 999,999,999 Wh) | Unsigned long | 4 bytes | Wh | Set/Get | | | |
| Charging electric power setting | 0xEB | This property designates the charging electric power in W<br>0x00000000-0x3B9AC9FF (0-999,999,999W) | unsigned long | 4 bytes | W | Set/ Get | | | |
| Charging current setting | 0xED | This property designates the charging current in units of 0.1A<br>0x0000-0xFFFD (0-6,553.3A) | unsigned short | 2 bytes | 0.1A | Set/ Get | | | |

Note: In the "Announcement at status change" column, ○ denotes mandatory processing when the property is implemented.

Note 1: "Vehicle connection confirmation" is only mandatory when the charger type is DC_type AA.

Note 2: "Used capacity of vehicle-mounted battery 1" is mandatory in cases of output from an electric vehicle connected to an electric vehicle charger. If no response can be returned, "Response impossible" is returned.

Note 3: Installation of either "Remaining stored electricity of vehicle-mounted battery 1" or "Remaining stored electricity of vehicle-mounted battery 3" is mandatory in cases of output from an electric vehicle connected to an electric vehicle charger. If no response can be returned, "Response impossible" is returned.

Note 4: DC_type AA, DC_type BB, DC_type EE and DC_type FF charger shall be electric vehicle chargers with connectors of the shape specified in Configuration AA, Configuration BB, Configuration EE and Configuration FF as defined in IEC 62196-3.

Note 5: The installation of "chargeable capacity of vehicle mounted battery" and "chargeable capacity of vehicle mounted battery" is mandatory in case of output from an electric vehicle connected to an electric vehicle charger.

*Electric vehicle chargers are chargers that include Electric Vehicle Power Systems (EVPS) connected to electric vehicles. Since an electric vehicle connected to an electric vehicle charger can be changed, the property values of the electric vehicle charger will also vary in accordance with the electric vehicle connected to the electric vehicle charger. Therefore, when the "Vehicle connection and chargeable status" changes from "Not connected to vehicle" to "Connected to vehicle", the connected electric vehicle may be different. For this reason, it is preferable to re-acquire property values for specifications determined by the electric vehicle and EVPS.



© 2000 - 2023 ECHONET Consortium

For example: Used capacity of vehicle-mounted battery 1

Note that AC is assumed for currents, voltages and electric energies handled in this class.

A relationship between the properties related to electric energy that are handled in this class is shown below. Actual capacities shall be determined based on the information from the electric vehicle connected to a charger, considering the efficiency of chargers.

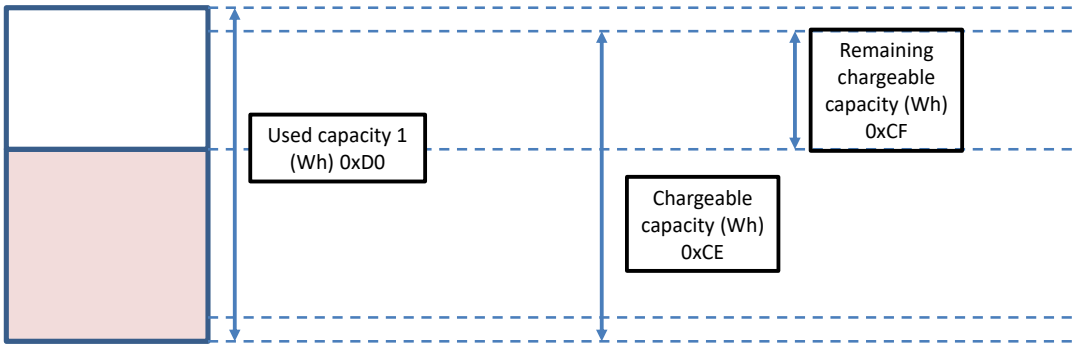


However, following properties of properties to be implemented on electric vehicle chargers shall be output as information of electric vehicle charger, instead of information based on those acquired from the electric vehicle charger.

・0x80: Operation status
・0xC5: Rated charge capacity
・0xC8: Minimum/maximum charging electric power
・0xCA: Minimum/maximum charging current
・0xCC: Charger type
・0xD2: Rated voltage
・0xD3: Measured instantaneous charging electric power
・0xD8: Measured cumulative amount of charging electric energy
・0xDA: Operating mode setting

For properties based on the information acquired from electric vehicles connected to the electric vehicle chargers, an example of the conversion calculation is shown in each property description. The examples are based on DC-type AA vehicles and assume the maximum charge efficiency of the chargers as 1.

The terms to be used in following detailed descriptions shall be defined as follows.

- Total battery capacity: “used capacity of vehicle mounted battery 1” property
- Charging rate of the battery: “remaining stored electricity of vehicle mounted battery 3” property
- Constant number for charging rate indication: a fixed number to indicate charging rate (100% (0x64))
- Charge upper limit for charging rate: the upper limit value that a vehicle can allow charging.



© 2000 - 2023 ECHONET Consortium

・ Charger charge efficiency: conversion efficiency between direct current and alternating current when charged from an electric vehicle charger

(1) Operation status (property inherited from the device object super class)

This property indicates whether an electric vehicle charger is ready to acquire status and accept settings (ON) or not (OFF). The property value is 0x30 for ON and 0x31 for OFF.

(2) Rated charge capacity

This property indicates the rated charge capacity of an electric vehicle charger in units of watts. The value range for this property shall be 0x00000000-0x3B9AC9FF (0-999,999,999W).

(3) Vehicle connection and chargeable status

This property indicates whether an electric vehicle charger can be charged. The property value is 0x30 when no vehicle is connected, 0x40 when a vehicle is connected but not chargeable, 0x41 when the vehicle is chargeable, and 0x44 when chargeable status is unknown.

“0x44” shall be used also, if the vehicle status is unknown until charging or is started, the chargeable status shall be output when a charging start instruction is given. If the connection status of a vehicle cannot be determined, this property indicates 0xFF as the undetermined status.

Vehicle connection and chargeable status shall be determined according to the combination of following information.

・Vehicle connection/disconnection confirmation

Vehicles shall be considered “connected” when a charger connector is locked and/or a signal line between the charger and the vehicle is connected. Vehicles shall be considered “not connected” (0x30) when a charger connector is not locked and/or a signal line between the charger and the vehicle is not connected.

・Chargeable/not chargeable determination

Shall be determined based on vehicle connection status.

When a vehicle does not support a discharging, the vehicle shall be chargeable.

When a vehicle supports a discharging, and a charge upper limit for charging rate is not 0, and charging rate is lower than charge upper limit for charging rate, the vehicle shall be chargeable.

When a vehicle supports a discharging, and a charge upper limit for charging rate is 0, the vehicle shall be chargeable.

When a vehicle does not support charging, the vehicle shall not be chargeable.

(4) Minimum/maximum charging electric power

This property indicates the minimum and maximum charging electric powers to an electric vehicle



© 2000 - 2023 ECHONET Consortium

charger in units of watts. The value range of each is 0x00000000-0x3B9AC9FF (0-999,999,999W). The property value represents minimum and maximum in sequence from the highest-order byte. When the property value of the actual device is higher than the property value range, overflow code 0xFFFFFFFF shall be used.

(5) Minimum/maximum charging current

This property indicates the minimum and maximum charging currents of an electric vehicle charger in units of 0.1A. The value range of each is 0x0000-0x7FFE (0-3,276.6A). The property value represents minimum and maximum in sequence from the highest-order byte. When the property value of the actual device is higher than the property value range, overflow code 0xFFFF shall be used.

(6) Charger type

This property indicates the type of electric vehicle charger. As the type of electric vehicle charger, it indicates one of AC_CPLT (0x11), AC_HLC (charging only) (0x12), DC_type AA (charging only) (0x21), DC_type BB (charging only) (0x31), DC_type EE (charging only) (0x41), and DC_type FF (charging only) (0x51).

Explanation of charger types

- AC_CPLT (0x11): Uses alternating current to charge the electric vehicle and CPLT signals to communicate with the electric vehicle.
- AC_HLC (charging only) (0x12): Uses alternating current to charge the electric vehicle and both CPLT and HLC signals to communicate with the electric vehicle.
- DC_type AA (charging only) (0x21): Uses direct current to charge the electric vehicle and type AA signals to communicate with the electric vehicle.
- DC_type BB (charging only) (0x31): Uses direct current to charge the electric vehicle and type BB signals to communicate with the electric vehicle.
- DC_type EE (charging only) (0x41): Uses direct current to charge the electric vehicle and type EE signals to communicate with the electric vehicle.
- DC_type FF (charging only) (0x51): Uses direct current to charge the electric vehicle and type FF signals to communicate with the electric vehicle.

Explanation of the relationship between charger type and “Vehicle connection and chargeable status” (0xC7)

- AC_CPLT (0x11): Always undetermined (0xFF).
- AC_HLC (charging only) (0x12): Undetermined (0xFF) when only CPLT functions are installed



© 2000 - 2023 ECHONET Consortium

in the connected vehicle. When both CPLT and HLC functions are installed in the vehicle, the content is as indicated under vehicle connection and chargeable status (0xC7).

- DC_type AA (charging only) (0x21): Undetermined (0xFF) until information is acquired via vehicle connection confirmation (0xCD). After information is acquired, the content is as indicated under vehicle connection and chargeable status (0xC7).
- DC_type BB (charging only) (0x31), DC_type EE (charging only) (0x41) and DC_type FF (charging only) (0x51): Content is as indicated under vehicle connection and chargeable status (0xC7).

(7) Vehicle connection confirmation

This property confirms the connection status between an electric vehicle charger and an electric vehicle. “Connection status” shall mean a status that a charger connector is locked and/or a signal line between the charger and a vehicle is connected.

This property is only mandatory if the electric vehicle charger type is one of DC_type AA (charging only) (0x21).

(8) Used capacity of vehicle-mounted battery 1 (total battery capacity)

This property indicates the capacity of a battery fitted in an electric vehicle connected to an electric vehicle charger, in units of Wh. The value range for this property shall be 0x00000000-0x3B9AC9FF (0-999,999,999Wh).

Shall be output based on information acquired from the vehicle.

(9) Rated voltage

This property indicates the normal rated voltage of an electric vehicle charger in units of V. The value range for this property shall be 0x0000-0x7FFE (0-32,766V).

(10) Measured instantaneous charging electric power

This property indicates the instantaneous electric power of an electric vehicle charger when in charging, in units of watts. In case of charging, the value range for this property is 0x00000000-0x3B9AC9FF (0-999,999,999W). When the property value of the actual device is higher than the property value range, overflow code 0x7FFFFFFF shall be used. The value when not charging is 0.

(11) Measured cumulative amount of charging electric energy

This property indicates the cumulative amount of electric energy when charging an electric vehicle charger, in units of 0.001kWh. The value range for this property shall be 0x00000000-0x3B9AC9FF (0-999,999.999kWh). When the cumulative amount of electric energy overflows, the property value



© 2000 - 2023 ECHONET Consortium

shall be incremented again from 0x00000000.

(12) Cumulative amount of charging electric energy reset setting

This property is set to 0x00 to reset the measured cumulative amount of charging electric energy to zero.

(13) Operating mode setting

This property indicates the operating mode of an electric vehicle charger. As operating modes, it indicates one of Charging (0x42), Standby (0x44), Idle (0x47) and Other (0x40).

Other (0x40) indicates that the charger is not in one of Charging, Standby or Idle modes.

Standby (0x44) indicates that the power converter operation is halted or the charging path to the electric vehicle is open, and it can automatically switch to charging when detecting a chargeable electric vehicle connected to the charger.

Idle (0x47) indicates that the power converter operation is halted or the charging path to the electric vehicle is open, and it will not automatically switch to charging when detecting a chargeable electric vehicle connected to the charger.

(14) Remaining stored electricity of vehicle-mounted battery 1

This property indicates the remaining stored electricity of a battery fitted in an electric vehicle connected to an electric vehicle charger, in Wh. The value range for this property shall be 0x00000000-0x3B9AC9FF (0-999,999,999Wh).

Based on information obtained from the vehicle, calculation shall be implemented using following formula: Note that the charge efficiency shall not be included in the electric vehicle charger.

Total battery capacity × charging rate of the battery÷ 100

(15) Remaining stored electricity of vehicle-mounted battery 3 (charging rate)

This property indicates the remaining stored electricity of a battery fitted in an electric vehicle connected to an electric vehicle charger (SOC: State of Charge) in %. The value range for this property shall be 0x00-0x64 (0-100%).

Shall be output based on information acquired from the vehicle.

(16) Charging electric power setting

This property designates the electric power to the electric vehicle charger when charging, in units of watts. The value range for this property shall be 0x00000000-0x3B9AC9FF (0-999,999,999W).

(17) Charging current setting



© 2000 - 2023 ECHONET Consortium

This property designates the amount of electric current to the electric vehicle charger when charging, in units of 0.1A. The value range for this property shall be 0x0000-0xFFFD (0-6,553.3A).

(18) Chargeable capacity of vehicle mounted battery

This property indicates the chargeable capacity of a vehicle battery connected to an electric vehicle charger in a unit of "Wh". The property value range is 0x00000000 to 0x3B9AC0FF (0 to 999,999,999 Wh).

Based on information obtained from the vehicle, calculation shall be implemented using following formula:

(Total battery capacity × charge upper limit for charging rate ÷ 100) ÷ charger charge efficiency

(19) Remaining chargeable capacity of vehicle mounted battery

This property indicates the remaining chargeable capacity of a vehicle battery connected to an electric vehicle charger in a unit of "Wh". The property value range is 0x00000000 to 0x3B9AC0FF (0 to 999,999,999 Wh).

Based on information obtained from the vehicle, calculation shall be implemented using following formula:

(Total battery capacity × (charge upper limit for charging rate - charging rate of the battery) ÷ 100) ÷ charger charge efficiency

(20) Vehicle ID

This property stores the data size of the vehicle ID information of an electric vehicle connected to an electric vehicle charger and vehicle ID information. Data length shall be variable, and it shall be vehicle ID information + 1. If vehicle ID cannot be acquired, Ox00 shall be stored in the first byte (number of bytes of vehicle ID information). In this case, data size shall be 1 byte.

| **Data size of the vehicle ID information** (1 byte) | **Vehicle ID information** (Max 24 bytes) |
|---|---|

Note that this property shall be effective when a value of the vehicle connection and chargeable status (0xC7) is 0x40, 0x41, and 0x44. Using the vehicle ID for billing purposes is not recommended due to potential security issues.

(21) Charging amount setting

This property specifies the charging electric energy in a unit of "Wh". The property value range is 0x00000000 to 0x3B9AC0FF (0 to 999,999,999 Wh). The property value "0x00000000" shall be "not



© 2000 - 2023 ECHONET Consortium

set". During charging operation based on this setting value, there is no change in the value based on the charging energy (there is no successive change corresponding to actual performance of charging energy). If this property is set during charging operation based on this setting value, charging shall start based on the cumulative value of electric energy from the point in time indicated by the charging amount setting if reflected, regardless of the charged amount. When charging operation based on this setting value is completed, the operation mode setting becomes "Standby". There are also cases where charging ends without the electric energy set for this setting value being charged. If charging until the chargeable capacity of vehicle mounted battery becomes 0, specify a value greater than the chargeable capacity of vehicle mounted battery for this setting value.



© 2000 - 2023 ECHONET Consortium

# 3．3．37 Household small wind turbine power generation

Class group code : 0x02

Class code : 0xA2

Instance code : 0x01–0x7F (0x00: All-instance specification code)

| Property name | EPC | Contents of property | Data type | Data size | Unit | Access rule | Mandatory | Announcement at status change | Remark |
|---|---|---|---|---|---|---|---|---|---|
| | | Value range (decimal notation) | | | | | | | |
| Operation status | 0x80 | This property indicates the ON/OFF status<br>ON=0x30, OFF=0x31 | unsigned char | 1 byte | - | Set<br>Get | <br>○ | ○ | (1) |
| System interconnection status | 0xD0 | This property indicates system interconnection status<br>System interconnected = 0x00<br>Output during a power outage = 0x01<br>Hybrid = 0x02 | unsigned char | 1 byte | - | Get | | | (2) |
| Measured instantaneous amount of electricity Generated | 0xE0 | This property indicates instantaneous generated power in W.<br>0x0000–0xFFFD (0–65533) | unsigned short | 2 bytes | W | Get | ○ | | (3) |
| Measured cumulative amount of electricity generated | 0xE1 | This property indicates integral electric energy in 0.001 kWh.<br>0x0–0x3B9AC9FF<br>(0–999999.999 kWh) | unsigned long | 4 bytes | 0.001 kWh | Get | ○ | | (4) |
| Resetting cumulative amount of electricity generated | 0xE2 | Resets integral generated electric energy by setting 0x00.<br>Reset = 0x00 | unsigned char | 1 byte | - | Set | | | (5) |
| Measured cumulative amount of electricity sold | 0xE3 | Indicates integral value of sold power in 0.001 kWh.<br>0x0–0x3B9AC9FF<br>(0–999999.999 kWh) | unsigned long | 4 bytes | 0.001 kWh | Get | | | (6) |
| Resetting cumulative amount of electricity sold | 0xE4 | Resets integral sold electric energy by setting 0x00.<br>Reset = 0x00 | unsigned char | 1 byte | - | Set | | | (7) |
| Power generation output limit setting 1 | 0xE5 | Specifies the power generation output as a percentage of the rated power generation output and to acquire the current setting.<br>0x00 to 0x64 (0 to 100%) | unsigned char | 1 byte | % | Set/Get | | | (8) |
| Power generation output limit setting 2 | 0xE6 | Specifies the power generation output in watts and to acquire the current setting.<br>0x0000 to 0xFFFD (0–65533) | unsigned short | 2 bytes | W | Set/Get | | | (9) |
| Limit setting for the amount of electricity sold | 0xE7 | Specifies, in watts, the amount of electricity sold and to acquire the current setting.<br>0x0000 to 0xFFFD (0–65533) | unsigned short | 2 bytes | W | Set/Get | | | (10) |



© 2000 - 2023 ECHONET Consortium

| | | | | | | | | | |
|---|---|---|---|---|---|---|---|---|---|
| Rated power | 0xE8 | This property indicates the rated power generation output in watts.<br>0x0000 to 0xFFFD (0–65533) | unsigned short | 2 bytes | W | Get | | | (11) |
| Measured wind speed | 0xEA | This property indicates the Wind Speed in meters per second.<br>0x00 to 0xFD (0–253) | unsigned char | 1 byte | m/s | Get | | | (12) |
| Rated wind speed[1] | 0xEB | This property indicates the rated wind speed in meters per second.<br>0x00 to 0xFD (0 to 253) | unsigned char | 1 byte | m/s | Get | | | (13) |
| Cut-in wind speed | 0xEC | This property indicates the cut-in wind speed in meters per second.<br>0x00 to 0xFD (0 to 253) | unsigned char | 1 byte | m/s | Get | | | (14) |
| Cut-out wind speed | 0xED | This property indicates the cut-out wind speed in meters per second.<br>0x00 to 0xFD (0 to 253) | unsigned char | 1 byte | m/s | Get | | | (15) |
| Extreme wind speed | 0xEE | This property indicates the Extreme wind speed in meters per second.<br>0x00 to 0xFD (0 to 253) | unsigned char | 1 byte | m/s | Get | | | (16) |
| Braking status | 0xEF | This property indicates the braking status of wind turbine.<br>ON=0x30, OFF=0x31 | unsigned char | 1 byte | - | Set/Get | ○ | ○ | (17) |

Note 1: In the “Announcement at status change” column, ○ denotes mandatory processing when the property is implemented.

(1) Operation status inherited from the property of device object super-class.
This property indicates the operation status as a Household small wind turbine power generation inverter. The status where power is supplied to the system side shall be defined as the “Operating status”

(2) System interconnection status
This property indicates system interconnection status. System interconnected = 0x00, Output during a power outage = 0x01, Hybrid = 0x02

(3) Measured instantaneous amount of electricity generated
This property indicates the instantaneous output in watts. The property value range shall be 0x0000 to 0xFFFD. When the property value of the actual piece of equipment is higher than the upper limit of the property value range, the overflow code 0xFFFF shall be used. When the property value is lower than the lower limit of the property value range, the underflow code 0xFFFE shall be used.

(4) Measured cumulative amount of electricity generated
This property indicates the integral generated electric energy in kWh. The property value range shall be 0x00000000 to 0x3B9AC9FF (0 to 999,999,999 kWh). When the integral electric energy overflows, the property value shall be incremented again from 0x00000000.



© 2000 - 2023 ECHONET Consortium

(5) Resetting cumulative amount of electricity generated

Resets the integral generated electric energy to zero by setting 0x00.

(6) Measured cumulative amount of electricity sold

This property indicates the integral sold electric energy in kWh. The property value range shall be 0x00000000 to 0x3B9AC9FF (0 to 999,999,999 kWh). When the integral electric energy overflows, the property value shall be incremented again from 0x00000000.

(7) Resetting cumulative amount of electricity sold

Resets the integral generated electric energy to zero by setting 0x00.

(8) Power generation output limit setting 1

Used to specify the power generation output as a percentage of the rated power generation output and to acquire the current setting. The value range for this property is from 0 to 100 (from 0x00 to 0x64), and the unit is %. When the value of this property is 100, no limit is imposed. In the case where it is not possible to limit the power generation output using the value specified by this property, the power generation output shall be limited using a value that is closest to and lower than the value specified by this property.

(9) Power generation output limit setting 2

Used to specify the power generation output in watts and to acquire the current setting. The value range for this property is from 0x0000 to 0xFFFD (from 0 to 65533). In the case where it is not possible to limit the power generation output using the value specified by this property, the power generation output shall be limited using a value that is closest to and lower than the value specified by this property.

(10) Limit setting for the amount of electricity sold

Used to specify, in watts, the amount of electricity sold and to acquire the current setting. The value range for this property is from 0x0000 to 0xFFFD (from 0 to 65533). In the case where it is not possible to limit the amounts of electricity sold using the value specified by this property, the amount of electricity sold shall be limited using a value that is closest to and lower than the value specified by this property.

(11) Rated power

This property indicates the rated power generation output in watts. This value is very important, since when the wind speed exceeds rated wind speed, there must be a control operation to avoid exceeding



© 2000 - 2023 ECHONET Consortium

this value and avoid damaging the machine. If the wind speed exceeds cut-out wind speed in which the machine can not control, it requires such action as standstill. The value range for this property is from 0x0000 to 0xFFFD (from 0 to 65533)

(12) Measured wind speed

This property indicates the wind speed measured in meters per second. The value range for this property is from 0x00 to 0xFD (from 0 to 253)

(13) Rated wind Speed

This property indicates the rated wind speed in meters per second. The value range for this property is from 0x00 to 0xFD (from 0 to 253)

(14) Cut-in Wind Speed

This property indicates the cut-in wind speed that the turbine first starts to rotate and generate power. The value range for this property is from 0x00 to 0xFD (from 0 to 253).

(15) Cut-out wind speed

This property indicates the cut-out wind speed that may have a risk of damage to the rotor. As a result, a braking system is employed to bring the rotor to a standstill. The value range for this property is from 0x00 to 0xFD (from 0 to 253).

(16) Extreme wind speed

This property indicates the highest average wind speed, averaged over t seconds, that is likely to be experienced within a specified time period (recurrence period) of T years. As defined in the IEC 61400-1 wind turbine design/safety standard, the largest wind speed to be considered is called “Ve50,” which is the maximum gust over a 50-year return period for a 3-second averaging time. The value range for this property is from 0x00 to 0xFD (from 0 to 253).

(17) Braking status

This property indicates the Braking status of household small wind turbine power generation that results from the achievement of cut-out wind speed. For emergency reason, it can be controlled manually by client, and some confirmation action (ex. Double check) must be made in the control side. [ON] means "forced stop". When wind turbine continues to generate electricity even if wind speed is over Cut-out wind speed, controller can stop wind turbine with this command. [OFF] means that the status of "forced stop" is released.



© 2000 - 2023 ECHONET Consortium

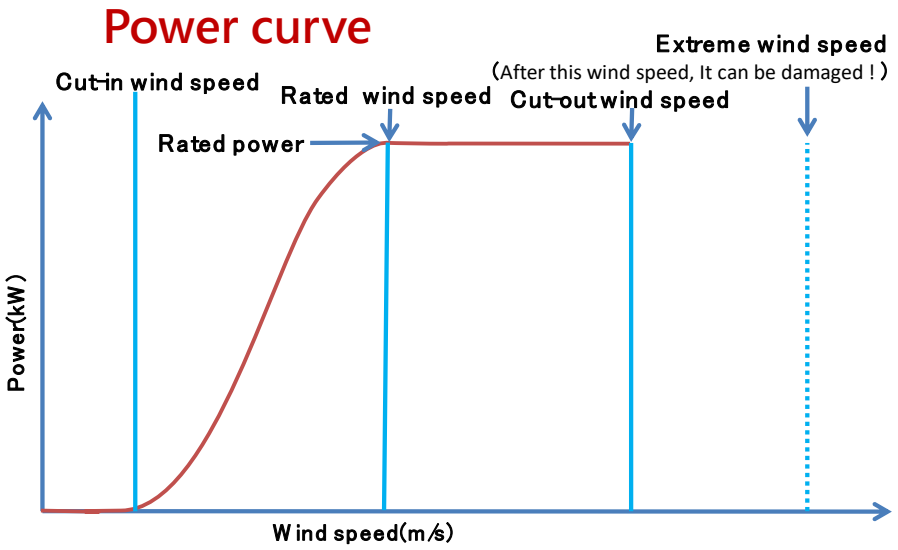


**Typical wind turbine power output with steady wind speed.**



© 2000 - 2023 ECHONET Consortium

## 3. 3. 38 Requirements for lighting system class

Class group code : 0x02

Class code : 0xA3

Instance code : 0x01–0x7F (0x00: All-instance specification code)

| Property name | EPC | Contents of property | Data type | Data size | Unit | Access rule | Mandatory | Announcement at status change | Remark |
|---|---|---|---|---|---|---|---|---|---|
| | | Value range (decimal notation) | | | | | | | |
| Operation status | 0x80 | Indicates ON／OFF state | unsigned char | 1 byte | — | Set | | ○ | |
| | | ON=0x30, OFF=0x31 | | | | Get | ○ | | |
| Illuminance level setting | 0xB0 | This property indicates illuminance level in %. 0x00 shall be a state of lights-out. | unsigned char | 1 byte | % | Set/Get | | | |
| | | 0x00-0x64 (0-100%) | | | | | | | |
| Scene control setting | 0xC0 | The maximum number shall be the one that can be assigned. | unsigned char | 1 byte | | Set | ○ | | |
| | | 0x00: Not set<br>0x01-0xFD (1-253) | | | | Get | ○ | | |
| Number that can assign scene control setting | 0xC1 | This property indicates the maximum number that can be assigned for scene control. | unsigned char | 1 byte | | Get | ○ | | |
| | | 0x00-0xFD (0-253) | | | | | | | |

Note 1: In the “Announcement at status change” column, ○ denotes mandatory processing when the property is implemented.

This class is for connecting an existing non-ECHONET lighting system to the ECHONET or ECHONET Lite system. The figure shows an example of lighting system class setting.

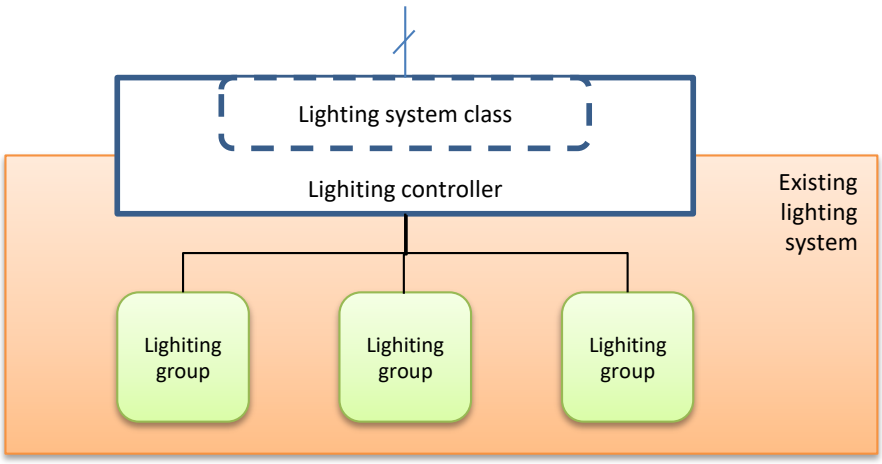


In this class, instance codes shall be given by lighting group. For example, with the configuration shown above, the instance codes are 0x01, 0x02, and 0x03 for each lighting group. Lighting group (instance code) may be configured with only one. If operating all lighting groups at a time, an instance code of 0x00 may be used.



© 2000 - 2023 ECHONET Consortium

(1) Operation status (inherited from the device object super class property)

This property indicates whether the lighting system is in the ON state (the lighting system can accept control) or OFF state (the lighting system cannot accept control). The property value is 0x30 for ON and 0x31 for OFF.

In cases where the lighting system belongs to a node and the lighting system is ready to accept control as soon as the node starts up, this property may be implemented as the fixed value (0x30).

(2) Illuminance level setting

Lighting levels set in a batch by group are indicated in %. Set lighting level by group to acquire lighting level set by group. If the lighting level of the actual device is higher or lower than the % unit, the property of the actual device shall be assigned to the property value of % unit specified in this property.

(3) Scene control setting

The lighting system is controlled using the scene control numbers set in the lighting system. Also the current scene control number set for the lighting system is obtained from this property. 0x00: Not set

For specific details on scene control indicated in property values, settings for each lighting system shall be set at the time of installation using the controller application or the like.

(4) Number that can assign scene control setting

This property indicates the maximum value of the scene control numbers that can be set for the lighting system.



© 2000 - 2023 ECHONET Consortium

## 3．3．39 Requirements for extended lighting system class

Class group code : 0x02

Class code : 0xA4

Instance code : 0x01–0x7F (0x00: All-instance specification code)

| Property name | EPC | Contents of property<br>Value range (decimal notation) | Data type | Data size | Unit | Access rule | Mandatory | Announcement at status change | Remark |
|---|---|---|---|---|---|---|---|---|---|
| Operation status | 0x80 | Indicates ON／OFF state<br>ON=0x30, OFF=0x31 | unsigned char | 1 byte | ― | Set<br>Get | <br>○ | ○ | |
| Illuminance level setting | 0xB0 | THIS PROPERTY INDICATES ILLUMINANCE LEVEL IN “%” 0X00 shall be a state of lights-out.<br>0X00-0x64 (0-100%) | unsigned char | 1 byte | % | Set/ Get | | | |
| Scene control setting | 0xC0 | The maximum number shall be the one that can be assigned.<br>0x00: Not set<br>0x01-0xFD (1-253) | unsigned char | 1 byte | | Set<br>Get | ○<br>○ | | |
| Number that can assign scene control setting | 0xC1 | This property indicates the maximum number that can be assigned for scene control.<br>0x01-0xFD (1-253) | unsigned char | 1 byte | | Get | ○ | | |
| Power consumption rate list | 0xC2 | Listed a number controllable by scene of power consumption ratio at scenes when defining a fully lighted as 100% power consumption.<br>0x00~0x64 (0-100 %), 0xFF (unknown) | unsigned char×(MIN1-MAX253) | Max 253 bytes | % | Get | ○ | | (5) |
| Power consumption when fully lighted | 0xC3 | This property indicates power consumption (W) when fully lighted of lighting to be connected into an extended lighting system of the applicable instance.<br>0x0000-0xFFFD (0-65533 W) | unsigned short | 2 bytes | W | Get | ○ | | (6) |
| Possible power savings | 0xC4 | This property indicates possible power savings (W) based on current operation status<br>0x0000-0xFFFD (0-65533 W) | unsigned short | 2 bytes | W | Get | ○ | | (7) |
| Power consumption limit setting | 0xC5 | Setting/Reading power (W) to be saved.<br>Cancelling power consumption restriction: 0x0000<br>0x0001-0xFFFD (1-65533 W) | unsigned short | 2 bytes | W | Set/ Get | ○ | | (8) |
| Automatic operation controlling setting | 0xC6 | Automatic operation controlling ON/OFF setting/reading (Automatic operation shall include schedule control, sensor control, etc.)<br>ON=0x30, OFF=0x31 | unsigned short | 1 byte | | Set/ Get | | | |
| Fading control change time setting | 0xC7 | Fading control change time shall be set/read. This property indicates the fading control change time in units of seconds.<br>0x0000-0x0E10 (0-3600 seconds) | unsigned short | 2 bytes | Seconds | Set/ Get | | | |

Note 1: In the “Announcement at status change” column, ○ denotes mandatory processing when the property is implemented.



© 2000 - 2023 ECHONET Consortium

This class is for connecting an existing non-ECHONET lighting system to the ECHONET or ECHONET Lite system, thereby enables energy control and monitoring. The figure below shows an installation example of extended lighting system class setting.

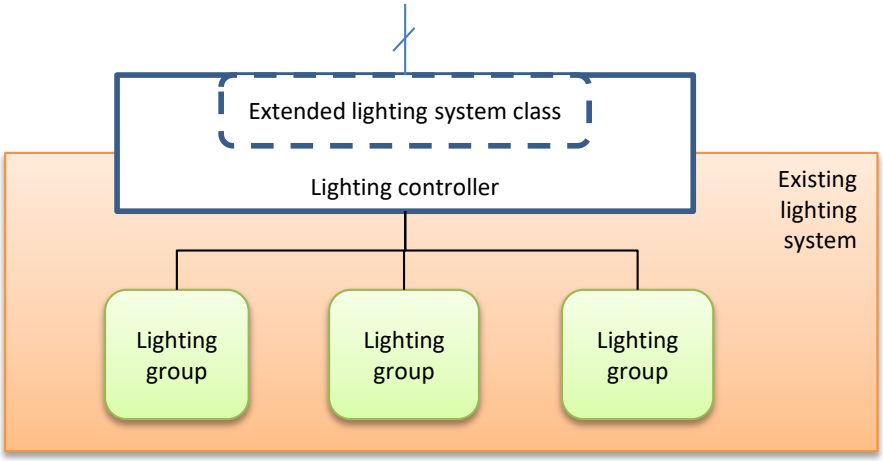


In this class, instance codes shall be given by lighting group. For example, with the configuration shown above, the instance codes are 0x01, 0x02, and 0x03 for each lighting group. Lighting group (instance code) may be configured with only one. If operating all lighting groups at a time, an instance code of 0x00 may be used.

Note that the lighting would be completely black outs when it is turned off by a controller, which may impose a safety concern. Therefore, it is necessary to take into the safety operation of the system control setting.

(1) Operation status (inherited from the device object super class property)

This property indicates if the extended lighting system class is acceptable (ON) or unacceptable (OFF) to receive control. 0x30 shall be made to correspond to ON and 0x31 to OFF.

In cases where the extended lighting system belongs to a node and the lighting system is ready to accept control as soon as the node starts up, this property may be implemented as the fixed value (0x30).

(2) Illuminance level setting

Lighting levels set in a batch by group are indicated in %. Set lighting level by group to acquire lighting level set by group. If the lighting level of the actual device is higher or lower than the % unit, the property of the actual device shall be assigned to the property value of % unit specified in this property.

(3) Scene control setting

The extended lighting system is controlled using the scene control numbers set in the extended lighting system. Also the current scene control number set for the lighting system is obtained from this property.

0x00: Not set



© 2000 - 2023 ECHONET Consortium

For specific details on scene control indicated in property values, settings for each lighting system shall be set at the time of installation using the controller application or the like.

(4) Number that can assign scene control setting

This property indicates the maximum value of the number that can assign scene control setting that can be set for the extended lighting system. “Not set” shall not be included but shall be a value greater than 1.

(5) Power consumption rate list

Listed power consumption ratios in % at all scenes when defining a fully lighted as 100% power consumption. This property shall include the power consumption ratio in a range between scene No. 1 to N (a number that can assign scene control settings). The “N” shall be equal at least 1 and not more than 253. “0xFF” shall be used if the power consumption ratio is unknown due to “not set/not measured”. If the power consumption ratio becomes settable after 0xFF is set, the value can be replaced with the power consumption ratio. Scene No. 0 for the power consumption shall not be defined since it is “not set” (meaning that it shall not be included in the power consumption rate list). When the illuminance level setting is changed, the degree of impact on the power consumption rate value for the same case shall depend on the implementation.

The table below shows the configuration of this property when the number that can assign scene control setting “N” is 5 and scenes No. 3 and 4 are “unknown” (0xFF), as an example. When scenes No. 6 and later are not implemented to the device, the arrangement shall be in total 5 bytes.

| Scene No. | 1 | 2 | 3 | 4 | 5 | … | … | 253 |
|---|---|---|---|---|---|---|---|---|
| Power consumption rate | 80% | 90% | 0xFF | 0xFF | 60% | - | - | - |

(6) Power consumption when fully lighted

This property indicates power consumption (rating) in W when fully lighted of lighting to be connected into an extended lighting system of the applicable instance. A power consumption ratio shall be calculated based on this property value. Basically, the value is constant even the scene is switched. However, the value can be set once again when adding the number of lighting devices to be connected physically or resetting scenes.

(7) Possible power savings

This property indicates possible power savings in W based on current operation status (scene) of applicable instance.

This property indicates normal values only when the operation status property value (0x80) is ON



© 2000 - 2023 ECHONET Consortium

(0x30). The value when the illuminance level setting is changed shall depend on the implementation.

(8) Power consumption limit setting

Setting power (W) to be saved/reading set value to restrict power consumption. As a rule, set a numerical figure equal to or smaller than the possible power savings. “0x0000” shall be set when canceling the control. If successfully controlled after setting the value, the value shall be retained and can acquirable. If control is failed, the value shall be “0x0000”.

The value of this property shall be set to 0x0000 30 minutes after setting*1, depending on the device. The range of property values when setting shall be 0x0001 through 0xFFFD (1 - 65,533W).

Note 1: Control considering the accuracy of the clock embedded in the device.

The figure below shows a setting scenario for power consumption when this property is set. Note that the power consumption can be set according to the implementation specifications of the lighting system. The figure below is provided for reference purposes only when lowering power consumption by making the lighting system able to select an applicable scene based on the set property values.

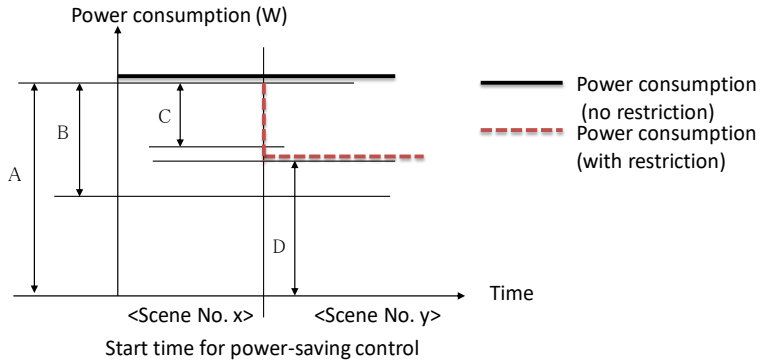


A: Power consumption when fully lighted * power consumption rate for Scene No. x/100
B: Possible power savings
C: Power consumption limit setting
D: Power consumption when fully lighted * power consumption rate for Scene No. y/100

The following relationship shall be maintained: $C \leq (A - D) \leq B \leq A$

When instructions are given to decrease power, the controlling side shall obtain information of the relationship between the power consumption and illuminance of lighting devices to be used, to avoid any problems that may arise from the decrease in illuminance. As an example of decreasing power under an appropriate illuminance, a value of possible power savings property can be set based on power consumption information at an illuminance that can avoid any problems in lighting space and the current illuminance of the lighting system. With LED lighting, the relationship between power consumption and illuminance is generally linear. Therefore, if power consumption is halved, for example, the



© 2000 - 2023 ECHONET Consortium

illuminance becomes half as well.

(9) Automatic operation controlling setting

When controlling and monitoring energy, if automatic operation of the lighting system (e.g. schedule and sensor control) is implemented, its ON/OFF (ON/OFF state) should be controlled. The “ON” state indicates a state where the automatic operation of the lighting system is currently working. The automatic operation shall have schedule control, sensor control, etc. The “OFF” state indicates a statue that the automatic operation of the lighting system is currently stopped. Property values “0x30” shall be assigned to ON and 0x31 to OFF, respectively. For example, a controller turns off the automatic operation of the lighting system, when starting a specific energy management service such as demand response. When completing the service, the controller turns on the lighting system.

(10) Fading control change time setting

If illuminance changes due to scene switching or the like, the target user who is underneath the lighting is highly likely to be affected by the rapid illuminance change. Under an environment where there is a number of general customers who are underneath the lighting (e.g. in stores), there is a need to save power to the extent that the customers (users) do not sense the change in illuminance. Therefore, a property shall be set to control the time to change the illuminance from the set illuminance to another. Fading control change time shall be set/read. For devices that implement Set, the fading control change time setting can be changed according to the setting request. The maximum fading control time shall be 3,600 seconds.



© 2000 - 2023 ECHONET Consortium

## 3. 3. 40 Requirements for the multiple input PCS class

Class group code : 0x02

Class code : 0xA5

Instance code : 0x01–0x7F (0x00: All-instance specification code)

| Property name | EPC | Contents of property<br>Value range (decimal notation) | Data type | Data size | Unit | Access rule | Mandatory | Announcement at status change | Remark |
|---|---|---|---|---|---|---|---|---|---|
| Operation status | 0x80 | This property indicates the ON/OFF status<br>ON=0x30, OFF=0x31 | unsigned char | 1 byte | — | Set<br>Get | <br>○ | ○ | |
| Identification number | 0x83 | A number that allows each object to be uniquely identified.<br>The first byte: Lower-layer communication ID field<br>0x01-0xFD:<br>If a unique number is assigned by the lower-layer communication protocols, an arbitrary ID number is set according to the protocol types. (Not used in ECHONET Lite).<br>0x11-0x1F: Power line Communication Protocol a and d systems<br>0x31-0x3F: Low-Power Radio Communication Protocol<br>0x41-0x4F: Extended HBS<br>0x51-0x5F: IrDA<br>0x61-0x6F: LonTalk<br>0x71-0x7F: Bluetooth<br>0x81-0x8F: Ethernet<br>0x91-0x9F: IEEE802.11/11b<br>0xA1: Power line Communication Protocol c systems<br>0xB1: IPv6/Ethernet<br>0xB2: IPv6/6LoWPAN<br><br>0xFE:<br>2nd-17th bytes are defined by the manufacturer according to the product type. (Refer to the detailed explanation.)<br>0xFF:<br>This ID number is used if 2nd-9th bytes are randomly generated by the lower-layer communication protocols.<br>0x00:<br>Identification number is not set.<br><br>The second and succeeding bytes: unique number field | unsigned char | 9 or 17 bytes | — | Get | ○ | | |
| Fault description | 0x89 | Describes the fault.<br>Lower-order byte of the fault description code.<br>Higher-order byte of the fault description code.<br>See “(3) ‘Fault Description’ Property.” | unsigned short | 2 bytes | - | Get | ○ | | |



© 2000 - 2023 ECHONET Consortium

| | | | | | | | | | |
|---|---|---|---|---|---|---|---|---|---|
| Product code | 0x8C | Identifies the product using ASCII code.<br>(Defined by each manufacturer.) | unsigned char × 12 | 12 bytes | - | Get | ○ | | |
| Current time setting | 0x97 | Current time (HH: MM format)<br>0x00-0x17: 0x00-0x3B (=0-23):(=0-59) | unsigned char ×2 | 2 bytes | — | Set<br>Get | <br>○ *1 | | |
| Current date setting | 0x98 | Current date (YYYY: MM: DD format)<br>1-0x270F: 1-0x0C: 1-0x1F (=1-9999): (=1-12): (=1-31) | unsigned char ×4 | 4 bytes | — | Set<br>Get | <br>○ *1 | | |
| System interconnection status | 0xD0 | This property indicates system interconnection status<br>System interconnected (reverse power flow acceptable)=0x00<br>Output during a power outage=0x01<br>System interconnected (reverse power flow not acceptable)=0x02 | unsigned char | 1 byte | | Get | ○ | | |
| Measured cumulative amount of electric energy (normal direction) | 0xE0 | This property indicates the cumulative amount of electric energy when AC-DC conversion in units of 0.001 kWh.<br>0x00000000-0x3B9AC9FF (0-999,999.999kWh) | unsigned long | 4 bytes | 0.001 kWh | Get | ○ | | |
| Measured cumulative amount of electric energy (reverse direction) | 0xE3 | This property indicates cumulative amount of electric energy when DC-AC conversion in units of 0.001 kWh.<br>0x00000000-0x3B9AC9FF (0-999,999.999kWh) | unsigned long | 4 bytes | 0.001 kWh | Get | ○ | | |
| Measured instantaneous electric power | 0xE7 | This property indicates the measured effective instantaneous electric power in units of 1W.<br>0x80000001-0x7FFFFFFD (-2,147,483,647-2,147,483,645) | signed long | 4 bytes | W | Get | ○ | | |
| List of connected devices | 0xE8 | List of devices connected to the multiple input PCS.<br>1st byte: Total number of connected device objects (0x01 to 0x0A)<br>2nd byte to max. 31st byte: EOJ 3 bytes × number of the connected device objects (max. 10) | unsigned char×(MAX )31 | Max 31 bytes | | Get | ○ | | |

Note 1: In the “announcement at status change” column, ○ denotes mandatory processing when the property is implemented.

Note 2:

*1 : Implementation in this class shall be required, if the device object included in the list of connected device properties is implemented.

The background to defining this class:

The PCSs that are connected to the different energy devices such as solar power generation and storage batteries have the distinctive features of mixed power output from energy devices and direct power exchange between energy devices

As PCS input/output cannot be acquired from device objects of energy devices, a class that has information regarding AC input/output is defined.



© 2000 - 2023 ECHONET Consortium

In this class, power and electric energy values shall be those of AC. The figure below shows an example configuration.

In addition to the multi-input PCS class, the multiple input PCS also has classes of devices connected (for example as shown in the figure below, the household solar power generation class, storage battery class, and electric vehicle chargers/dischargers class).

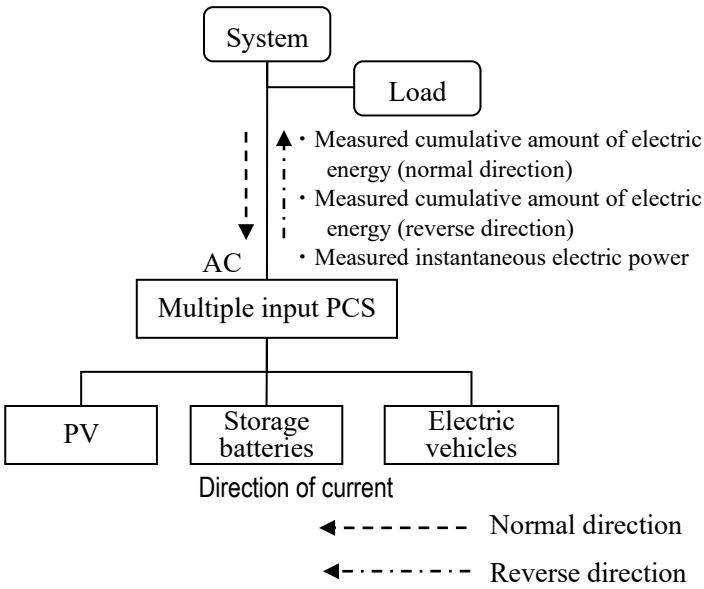


(1) Operation status

This property indicates whether the functions specific to this class are operating (ON) or not (OFF). In the node mounting this class, if the function of this class is started concurrently with the start of node operation, this property may be implemented at a fixed value of 0x30 (Operation status ON).

(2) Identification number (inherited from the property of the device object super class)

Definitions in ECHONET and ECHONET Lite are as follows: This property shall be required for the household Solar Power Generations class.

•ECHONET definition

This property indicates a number that allows each node to be uniquely identified in the domain. The property indicates a lower-layer communication software ID field which stores IDs defined for each lower-layer communication software class and a unique number field that stores a unique identification number that is assigned to each product using a specified method for each lower-layer communication software program. The definition of this unique number is given in the specifications for lower-layer communication software programs in Part III. (However, Version3.00 and later versions of the



© 2000 - 2023 ECHONET Consortium

ECHONET Specifications define this unique number for IP/Bluetooth-dependent lower-layer communication software and IP/Ethernet/IEEE802.3dependent lower-layer communication software.) This unique number indicates the hardware address. If the hardware address is less than 8bytes, it shall be stored in the unique number field from the highest-order byte and the remaining bytes shall be padded with 0.

Each ECHONET node must have at least one device object, but the node identification number property value must be the same as the value of the node identification number property held by the device object.

•ECHONET Lite definition

This property indicates a number that allows each device object to be uniquely identified in the domain. As ECHONET Lite does not define lower-layer communication protocol classes, it only considers 0xFE, 0xFF, and 0x00 as protocol classes of lower-layer communication.

Manufacturer's specific code (0xFE) consists of a manufacturer code field to store the code of each manufacturer and a field defined by each manufacturer. The first to third bytes indicate a 3-byte manufacturer code specified by the ECHONET Consortium.

The fourth and succeeding bytes store the unique ID of each vendor. Each vendor shall ensure that the codes will not overlap.

| | |
|---|---|
| Manufacturer code (3 bytes) | Unique ID field (unique identification number specified by the manufacturer) (13 bytes) |

(3) Fault description

The "Fault description" property shall be assigned fault description code values as specified in device object super class Table 2-3.

A "recoverable fault" as defined in the table is an abnormality that hinders the normal functioning of the device, but the cause of the fault can be removed by some action by the user, or the cause of the fault can be removed no action.

A "fault that requires repair" as defined in the table is a fault which is currently inhibiting the proper operation of the device or a function of the device and whose cause cannot be removed without repair work by a specialist.

The "Recover operation no required" may be caused by the power grid or by the environment such as temperature.

The "Repair location unknown" is a repair location cannot be specified.

Also, in some cases, such as a fault caused by a disturbance does not require repair.

The values between 0x03EA and 0x03FE, which are values for combinations of higher- and lower-order bytes of the fault description code, are reserved for future use.



© 2000 - 2023 ECHONET Consortium

When multiple faults occur at the same time, values are set in order of priority: "Faults that require repair", "A fault has occurred, but the recovery method or fault location cannot be determined", "Recoverable faults".
If the “Fault status” property (0x88) of the device object super class indicates that there is a fault (0x41), the lower-order byte of the "Fault Description Code" is 0x01 to 0xE9 or the "Fault Description Code" shall be 0x03FF. If the “Fault status” is no fault, the "Fault Description Code" shall be 0x0000.).

(4) Product code

The “Product code” property identifies the relevant product of the manufacturer using a 12-byte ASCII code. “Product code” property values are not defined by the ECHONET Consortium; they are defined by each manufacturer. When the “Product code” property value is less than 12 bytes, the product code shall be left-justified in the data area and the remainder of the data area shall be padded with NULLs or spaces.

(5) Current time setting

This property indicates the current local time using a value between 0x00 and 0x17 (0-23) for the hour and a value between 0x00 and 0x3B (0-59) for the minute. The first byte of the property value indicates the hour and the second byte indicates the minute.

(6) Current date setting

This property indicates the current date using a value between 0x0001 and 0x270F (1-9999) for the year, a value between 0x01 and 0x0C (1-12) for the month and a value between 0x01 and 0x1F (1-31) for the day. The first and second bytes are treated as one piece of unsigned short data which indicates the year (2 bytes). The third byte indicates the month (1 byte) and the fourth byte indicates the day (1 byte).Only Get is required for this class.

(7) System interconnection status

This property indicates the current status of interconnection with the system (system interconnection status).
System interconnected (reverse power flow acceptable)=0x00, Output during a power outage =0x01, System interconnected (reverse power flow not acceptable)=0x02

(8) Measured cumulative amount of electric energy (normal direction)

This property indicates the measured cumulative amount of electric energy when converting AC to DC in 0.001kWh. The property value range shall be from 0x00000000 to 0x3B9AC9FF (0-999,999.999 kWh). In the event of a cumulative amount of electric energy overflows, the counting of the cumulative



© 2000 - 2023 ECHONET Consortium

amount of electric energy overflows shall be restarted from 0x00000000.

(9) Measured cumulative amount of electric energy (reverse direction)

This property indicates the measured cumulative amount of electric energy when converting DC to AC in 0.001kWh. The property value range shall be from 0x00000000 to 0x3B9AC9FF (0-999,999.999 kWh). In the event of a cumulative amount of electric energy overflows, the counting of the cumulative amount of electric energy overflows shall be restarted from 0x00000000.

(10) Measured instantaneous electric power

This property indicates the measured effective instantaneous electric power in watts. The value range shall be: 0x80000001-0x7FFFFFFD (-2147483647-2147483645). The “normal direction” shall be defined as “positive”, while the “reverse direction” is defined as “negative”.

Range: -2,147,483,647-2,147,483,645W (unit of measurement: W)

※ Underflow : 0x80000000
Overflow : 0x7FFFFFFF

(11) List of connected devices

List of device objects connected to multiple input PCS. The 1 Byte is the number of device objects connected (excluding multiple input PCS objects), the 2 Byte and successive bytes are a list of EOJ 3 byte of the device objects connected (class group code, class code, and instance code). Basically, it is expected to list the EOJ of the energy creation and energy accumulation devices.

Specifically, for multiple input PCSs having the household solar power generation class, storage battery class, and electric vehicle chargers/dischargers class, 0x03, 0x02, 0x79, 0x01, 0x02, 0x7D, 0x01, 0x02, 0x7E, and 0x01 are listed.



© 2000 - 2023 ECHONET Consortium

## 3. 3. 41 Requirements for the hybrid water heater class

Class group code : 0x02

Class code : 0xA6

Instance code : 0x01–0x7F (0x00: All-instance specification code)

| Property name | EPC | Contents of property<br>Value range (decimal notation) | Data type | Data Size | Unit | Access rule | Man-datory | Announcement at status change | Remark |
|---|---|---|---|---|---|---|---|---|---|
| Operation status | 0x80 | Indicates ON/OFF state<br>ON=0x30, OFF=0x31 | Unsigned char | 1 byte | — | Set<br>Get | <br>○ | ○ | |
| Automatic water heating setting | 0xB0 | This property indicates automatic water heating ON/OFF.<br>Automatic water heating=0x41<br>Water heating manual stop=0x43<br>Manual water heating=0x42 | Unsigned char | 1 byte | — | Set/Get | | ○ | |
| Water heating status | 0xB2 | This property indicates water heating status.<br>Water is heating=0x41<br>Water is not heating=0x42 | Unsigned char | 1 byte | — | Get | | ○ | |
| Heater status | 0xB3 | This property indicates heater status.<br>Water is heating=0x41<br>Water is not heating=0x42 | Unsigned char | 1 byte | — | Get | | ○ | |
| Hot water supply mode setting for auxiliary heat source machine | 0xB6 | Set hot water supply operation to auxiliary heat source only.<br>Set=0x41<br>No setting=0x42 | Unsigned char | 1 byte | — | Set/Get | | | |
| Heater mode setting for auxiliary heat source machine | 0xB7 | Set heater operation to auxiliary heat source only.<br>Set=0x41<br>No setting=0x42 | Unsigned char | 1 byte | — | Set/Get | | | |
| Linkage mode setting for solar power generation | 0xB8 | Used to specify a mode when linked with the solar power generations, and to acquire the current setting.<br>Mode off=0x41<br>Household consumption=0x42<br>Prioritizing electricity sales=0x43<br>Economic efficiency=0x44 | Unsigned char | 1 byte | — | Set/Get | ○ | ○ | |
| Solar power generations utilization time | 0xB9 | Start time: End time<br>HH:MM:HH:MM<br>0-0x17: 0–0x3B:0–0x17: 0-0x3B<br>(=0–23):(=0–59):(=0–23):(=0–59) | Unsigned char x 4 | 4 bytes | — | Set/Get | | | |
| Hot water supply status | 0xC3 | This property indicates the status of supplying hot water.<br>Supplying hot water=0x41,<br>not supplying hot water=0x42 | Unsigned char | 1 byte | — | Get | | ○ | |
| Measured amount of hot water remaining in tank | 0xE1 | This property indicates the measured amount of hot water left in the tank in liters.<br>0x0000–0xFFFD(0–65533 liters) | Unsigned char | 2 bytes | liters | Get | | | |



© 2000 - 2023 ECHONET Consortium

| | | | | | | | | | |
|---|---|---|---|---|---|---|---|---|---|
| Tank capacity | 0xE2 | This property indicates the tank capacity in liters.<br>0x0000–0xFFFD(0–65533 liters) | Unsigned char | 2 bytes | liters | Get | | | |

Note: In the “Announcement at status change” column, ○ denotes mandatory processing when the property is implemented.

A hybrid water heater (water heater combining electric heat pump and gas instantaneous water heater) is a type of device with an instantaneous water heater that uses fossil fuels (e.g. gas and kerosene) and a storage tank that uses a heat pump at a same time. In this class, functions using the heat pump are primarily defined. The “instantaneous water heater class” shall be referenced for functions related to instantaneous water heaters using fossil fuels such as gas and kerosene. Accordingly, devices implementing this class are recommended to use this class and the "instantaneous water heater class” at the same time.

Hybrid water heaters include two types of devices: (1) those that only operate the heat pump when supplying hot water; and (2) those that operate the heat pump when supplying hot water and heating. Below are operation examples.

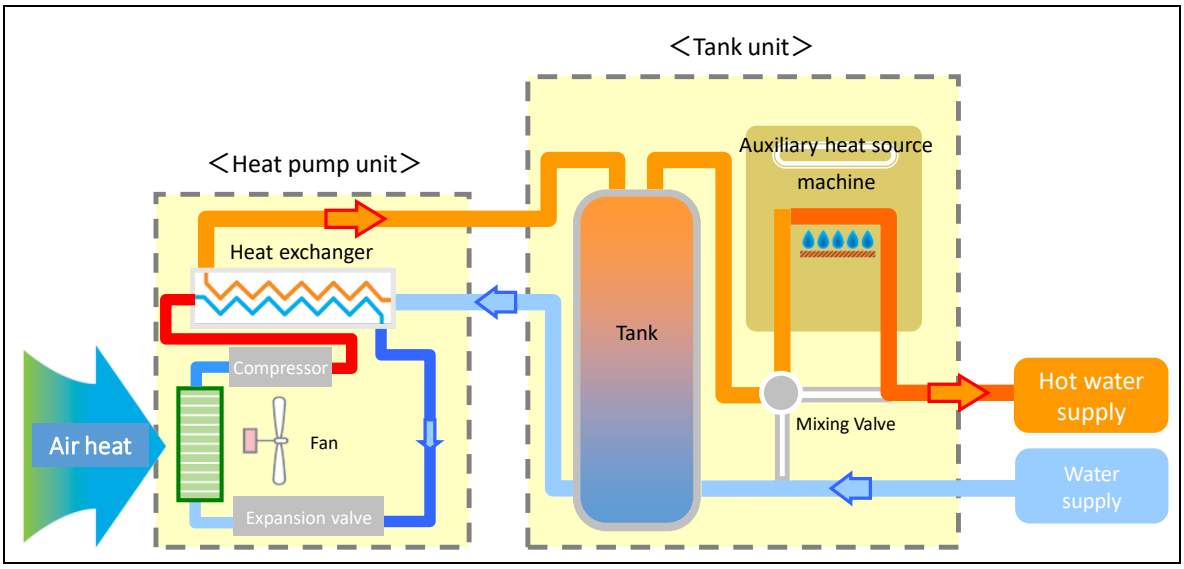


Operation examples for devices that only operate the heat pump when supplying hot water



© 2000 - 2023 ECHONET Consortium

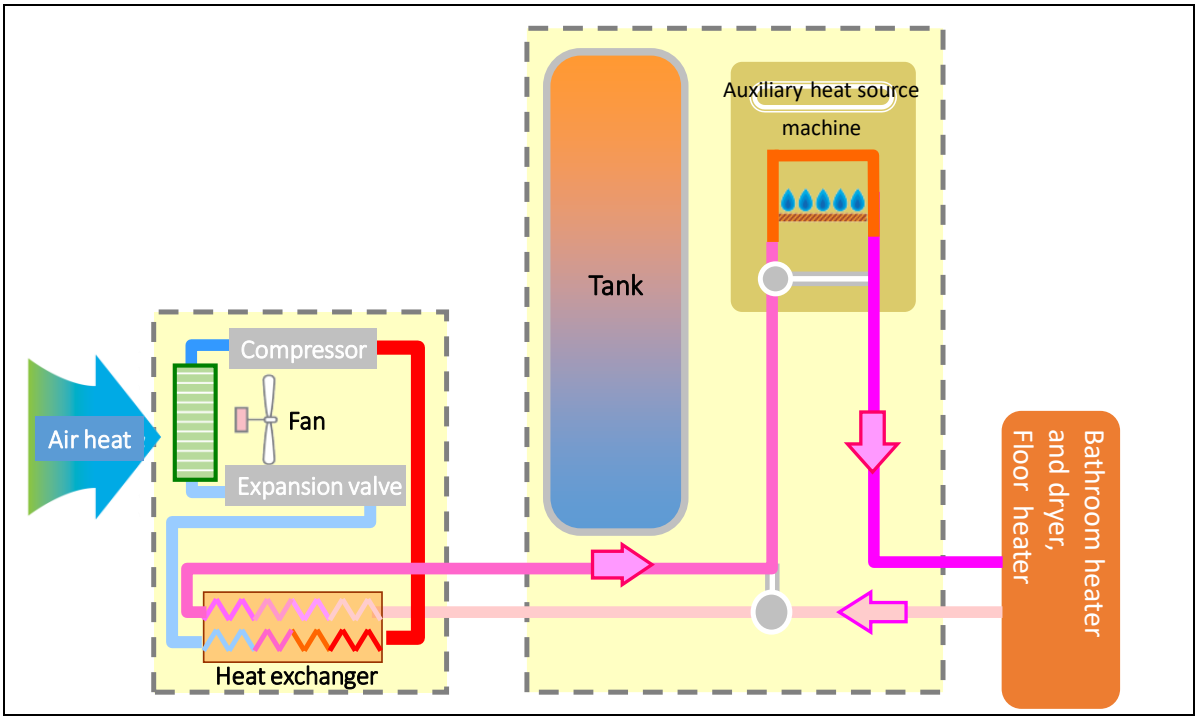


Operation examples for devices operate heat pump when supplying hot water and heating

(23) Operation status

This property indicates whether the hybrid water heater is in the ON state (i.e. the hybrid water heater responds to user operation) or OFF state. 0x30 and 0x31 shall be used for the ON and OFF states, respectively. In the node mounting "hybrid water heater" class, if the function of this class is started concurrently with the start of node operation, this property may be implemented as a fixed value of 0x30 (Operation status ON).

(24) Automatic water heating setting

This property indicates a setting as to whether to automatically heat water within the tank. 0x41 shall be used for “automatic water heating”. In addition, 0x42 shall be used for the manual water heating setting, while 0x43 shall be used for the manual water heating stop setting.

(25) Water heating status

This property status indicates whether heat pump is operating for the purpose of supplying water heating or not (water is heating: 0x41 and water is not heating: 0x42).

(26) Heater status

This property indicates a status whether heat pump is operating for the purpose of heater or not: water is heating:0x41 and water is not heating:0x42. The status of heating operation shall be defined by "floor heaters class", "bathroom heater and dryer class", and the like.



© 2000 - 2023 ECHONET Consortium

(27) Hot water supply mode setting for auxiliary heat source machine

This property indicates a setting as to whether the device is using an auxiliary heat source machine only, without operating a heat pump when supplying hot water (set (not operating heat pump): 0x41 and not set: 0x42). An auxiliary heat source machine is a type of instantaneous water heater that uses fossil fuels such as gas or kerosene.

(28) Heater mode setting for auxiliary heat source machine

This property indicates a setting whether using auxiliary heat source machine only, without operating heat pump when heating (setting (not operating heat pump):0x41 and not setting:0x42). An auxiliary heat source machine is a type of instantaneous water heater that uses fossil fuels such as gas or kerosene.

(29) Linkage mode setting for solar power generation

This property indicates the linkage mode setting for solar power generation: mode off: 0x41, household consumption: 0x42, prioritizing electricity sales: 0x43, and economic efficiency: 0x44. The definitions of the individual status maps are as follows:

Mode off: Operates a heat pump with controls that the device has.

Household consumption: operates the heat pump during the timeframe indicated by the “solar power generations utilization time" property. However, if the device does not support SET under the "solar power generations utilization time" property”, the time frame during which the device operates the heat pump shall be the timeframe specified by the device.

Prioritizing electricity sales: does not operate a heat pump during the time frame indicated by the “solar power generations utilization time" property. However, if the device does not support SET under the "solar power generations utilization time" property”, the time frame that the device does not operate a heat pump shall be the time frame specified by the device.

Economic efficiency: devices make their own decisions to choose whether household consumption or prioritizing electricity sales is more advantageous in terms of economic efficiency, and determine what action to take.

(30) Solar power generations utilization time

This property indicates the timeframe start and finish for whether or not to operate the heat pump using solar power generation. This property relates to "linkage mode setting for solar power generation". If the property is not implemented, operations shall take place based on the linkage mode setting for solar power generation during the timeframe specified by the device. When the finish time is set earlier than the start time, it is judged as a cross over to the next day.

Below are the relationships between linkage mode settings for the solar power generation property and the solar power generation utilization time property:



© 2000 - 2023 ECHONET Consortium

| Item | Solar power generations utilization time=SET enabled | | Solar power generations utilization time=SET disabled | |
|---|---|---|---|---|
| | Within utilization time (Timeframe setting is enabled) | Out of utilization time | Within utilization time (The timeframe specified by the device) | Out of utilization time |
| Mode off | Operates a heat pump with controls that the device has | Operates a heat pump with controls that the device has | Operates a heat pump with controls that the device has | Operates a heat pump with controls that the device has |
| Household consumption | Operates the heat pump | Operates a heat pump with controls that the device has | Operates the heat pump | Operates a heat pump with controls that the device has |
| Prioritizing electricity sales | Does not operate the heat pump | Operates a heat pump with controls that the device has | Does not operate the heat pump | Operates a heat pump with controls that the device has |
| Economic efficiency | Determine whether the device operates the heat pump or not, considering economic efficiency | Operates a heat pump with controls that the device has | Determine whether the device operates the heat pump or not, considering economic efficiency | Operates a heat pump with controls that the device has |

(31) Hot water supply status

This property indicates whether hot water is used at a faucet in a kitchen, bathroom shower, or other areas (supplying hot water: 0x41 and not supplying hot water: 0x42). Hot water supply in this property shall exclude hot water filling.

For "Life watching service", "Announcement at status change" is mandatory.

(32) Measured amount of hot water remaining in tank

This property indicates the amount of hot water remaining in the tank in liters. The property value range is 0x0000 to 0xFFFD (0 to 65533 liters). When the property value of the actual device is higher than the upper limit of the property value range, the overflow code 0xFFFF shall be used. When the property value is lower than the lower limit of the property value range, the underflow code 0xFFFE shall be used.

(33) Tank capacity

This property indicates the tank capacity in liters. The property value range is 0x0000 to 0xFFFD (0 to 65533 liters). When the property value of the actual device is higher than the upper limit of the property value range, the overflow code 0xFFFF shall be used. When the property value is lower than the lower limit of the property value range, the underflow code 0xFFFE shall be used.



© 2000 - 2023 ECHONET Consortium

## 3．3．42 Requirements for bidirectional high voltage smart electric energy meter class

Class group code : 0x02

Class code : 0x8F

Instance code : 0x01–0x7F (0x00: All-instance specification code)

| Property name | EPC | Contents of property<br>Value range (decimal notation) | Data type | Data size | Unit | Access rule | Mandatory | Announcement at status change | Remarks |
|---|---|---|---|---|---|---|---|---|---|
| Operation status | 0x80 | Indicates ON/OFF state<br>ON=0x30, OFF=0x31 | Unsigned char | 1 bytes | | Set<br>Get | <br>○ | ○ | |
| Route B Identification number | 0xC0 | A number that allows high-voltage smart electric energy meters to be uniquely identified in the domain.<br>1st byte: 0x00<br>2nd–4th bytes: Manufacturer code 0x000000–0xFFFFFF<br>5th–16th bytes: free area | Unsigned char | 16 bytes | | Get | ○<br>*1 | | |
| One-minute measured cumulative amount of active electric energy (normal and reverse directions) | 0xD0 | This property indicates the most recent cumulative amount of active electric energy measured at 1-minute intervals held by the meter readings for the measurement date in 4 bytes, measurement time in 3 bytes, and cumulative amount of active electric energy in 4 bytes.<br>・ Date of measurement: YYYY:MM:DD<br>・Measurement time: hh:mm:ss<br>・Cumulative amount of active electric energy (normal direction) Maximum 8 digits in decimal notation<br>・Cumulative amount of active electric energy (reverse direction) Maximum 8 digits in decimal notation | Unsigned short ＋ Unsigned char×2 ＋ Unsigned char×3 ＋ Unsigned long ＋ Unsigned long | 15 bytes | Year, month, day, hour, minute, second, kWh | Get | ○ | | |



© 2000 - 2023 ECHONET Consortium

| | | | | | | | | | |
|---|---|---|---|---|---|---|---|---|---|
| | | 1st–4th bytes: Measurement date<br>YYYY: 0x0001–0x270F (1–9999)<br>MM: 0x01–0x0C (1–12)<br>DD: 0x01–0x1F (1–31)<br>5th–7th bytes: time of measurement<br>hh: 0x00-0x17 (0-23)<br>mm: 0x00-0x3B (0–59)<br>ss: 0x00–0x3B (0–59)<br>8th–11th bytes: Cumulative amount of active electric energy (normal direction)<br>0x00000000–0x05F5E0FF (0–99,999,999)<br>12th–15th bytes: Cumulative amount of active electric energy (reverse direction)<br>0x00000000–0x05F5E0FF (0–99,999,999) | | | | | | | |
| One-minute measurement data of cumulative amount of reactive electric energy (lag) for power factor measurement (normal and reverse directions) | 0xD1 | This property indicates the meter readings for measurement data of cumulative amount of reactive electric power for power factor measurement at the most recent one-minute measurement time, with the measurement date in 4 bytes, measurement time in 3 bytes, cumulative amount of reactive electric energy (normal direction) in 4 bytes, and cumulative amount of reactive electric energy (reverse direction) in 4 bytes.<br>・ Date of measurement: YYYY:MM:DD<br>・Measurement time: hh:mm:ss<br>・Cumulative amount of reactive electric energy (lag) (normal direction) Maximum 8 digits in decimal notation<br>・Cumulative amount of reactive electric energy (lag) (reverse direction) Maximum 8 digits in decimal notation | Unsigned short<br>＋<br>Unsigned char×2<br>＋<br>Unsigned char×3<br>＋<br>Unsigned long<br>＋<br>Unsigned long | 15 bytes | Year, month, day, hour, minute, second, kvarh | Get | | | |



© 2000 - 2023 ECHONET Consortium

| | | | | | | | | | |
|---|---|---|---|---|---|---|---|---|---|
| | | 1st–4th bytes: Measurement date<br>YYYY: 0x0001–0x270F (1–9999)<br>MM: 0x01–0x0C (1–12)<br>DD: 0x01–0x1F (1–31)<br>5th–7th bytes: time of measurement<br>hh: 0x00-0x17 (0-23)<br>mm: 0x00-0x3B (0–59)<br>ss: 0x00–0x3B (0–59)<br>8th–11th bytes: Cumulative amount of reactive electric energy (lag) (normal direction)<br>0x00000000–0x05F5E0FF (0–99,999,999)<br>12th–15th bytes: Cumulative amount of reactive electric energy (lag) (reverse direction)<br>0x00000000–0x05F5E0FF (0–99,999,999) | | | | | | | |
| Coefficient | 0xD3 | This property indicates the coefficient for converting meter readings to actual kWh, kvarh and kW using a 6-digit decimal notation.<br>0x00000000–0x000F423F (000000–999999) | Unsigned long | 4 bytes | | Get | ○ | | |
| Multiplying factor for coefficient | 0xD4 | This property indicates the multiplying factor for coefficient.<br>0x00: ×1<br>0x01: ×0.1<br>0x02: ×0.01<br>0x03: ×0.001 | Unsigned char | 1 bytes | | Get | ○ | | |
| Fixed date | 0xE0 | This property indicates the fixed date for monthly usage, etc.<br>0x01-0x1F (1-31) | Unsigned char | 1 bytes | | Get | ○ | | |
| Day for which the historical data of measured cumulative amounts of electric energy is to be retrieved | 0xE1 | This property indicates the day for which the historical data of measured cumulative amounts of electric energy (which consists of 48 pieces of half-hourly data for the preceding 24 hours) is to be retrieved.<br>0x00–0x63<br>(0-99)<br>0: current day 1-99: days ago | Unsigned char | 1 bytes | | Set/Get | ○ | | |



© 2000 - 2023 ECHONET Consortium

| | | | | | | | | | |
|---|---|---|---|---|---|---|---|---|---|
| Measured cumulative amount of active electric energy (normal and reverse directions) | 0xE2 | This property indicates the meter readings for measured cumulative amount of active electric energy at the most recent measurement time using a maximum of 8 digits in decimal notation. Indicates the measurement date in 4 bytes, measurement time in 3 bytes, and cumulative amount of active electric energy (normal direction) in 4 bytes, and cumulative amount of active electric energy (reverse direction) in 4 bytes.<br>・ Date of measurement: YYYY:MM:DD<br>・Measurement time: hh:mm:ss<br>・ Cumulative amount of active electric energy Maximum 8 digits in decimal notation<br>1st–4th bytes: Measurement date<br>YYYY: 0x0001–0x270F (1–9999)<br>MM: 0x01–0x0C (1–12)<br>DD: 0x01–0x1F (1–31)<br>5th–7th bytes: time of measurement<br>hh: 0x00-0x17 (0-23)<br>mm: 0x00-0x3B (0–59)<br>ss: 0x00–0x3B (0–59)<br>8th–11th bytes: Cumulative amount of active electric energy (normal direction)<br>0x00000000–0x05F5E0FF (0–99,999,999)<br>12th–15th bytes: Cumulative amount of active electric energy (reverse direction)<br>0x00000000–0x05F5E0FF (0–99,999,999) | Unsigned short ＋ Unsigned char×2 ＋ Unsigned char×3 ＋ Unsigned long ＋ Unsigned long | 15 bytes | Year, month, day, hour, minute, second, kWh | Get | ○ | | |
| Cumulative amounts of active electric energy at fixed time (normal and reverse directions) | 0xE3 | This property indicates the most recent meter readings for cumulative amount of active electric energy measured at 30-minute intervals held by the measurement date in 4 bytes, measurement time in 3 bytes, and cumulative amount of active electric energy (normal direction) in 4 bytes, and cumulative amount of active electric energy (reverse direction) in 4 bytes.<br>・ Date of measurement: YYYY:MM:DD<br>・Measurement time: hh:mm:ss<br>・ Cumulative amount of active electric energy Maximum 8 digits in decimal notation | Unsigned short ＋ Unsigned char×2 ＋ Unsigned char×3 ＋ Unsigned long ＋ Unsigned long | 15 bytes | Year, month, day, hour, minute, second, kWh | Get | ○ | | |



© 2000 - 2023 ECHONET Consortium

| | | | | | | | | | |
|---|---|---|---|---|---|---|---|---|---|
| | | 1st–4th bytes: Measurement date<br>YYYY: 0x0001–0x270F (1–9999)<br>MM: 0x01–0x0C (1–12)<br>DD: 0x01–0x1F (1–31)<br>5th–7th bytes: time of measurement<br>hh: 0x00-0x17 (0-23)<br>mm: 0x00-0x3B (0–59)<br>ss: 0x00–0x3B (0–59)<br>8th–11th bytes: Cumulative amount of active electric energy (normal direction)<br>0x00000000–0x05F5E0FF (0–99,999,999)<br>12th–15th bytes: Cumulative amount of active electric energy (reverse direction)<br>0x00000000–0x05F5E0FF (0–99,999,999) | | | | | | | |
| Measurement data of cumulative amount of active electric energy for power factor measurement (normal and reverse directions) | 0xE4 | This property indicates the most recent measurement data of cumulative amount of active electric energy for power factor measurement, with the measurement date in 4 bytes, measurement time in 3 bytes, and cumulative amount of active electric energy (normal direction) in 4 bytes, and cumulative amount of active electric energy (reverse direction) in 4 bytes.<br>・ Date of measurement: YYYY:MM:DD<br>・Measurement time: hh:mm:ss<br>・ Cumulative amount of active electric energy Maximum 8 digits in decimal notation | Unsigned short<br>＋<br>Unsigned char×2<br>＋<br>Unsigned char×3<br>＋<br>Unsigned long<br>＋<br>Unsigned long | 15 bytes | Year, month, day, hour, minute, second, kWh | Get | | | |
| | | 1st–4th bytes: Measurement date<br>YYYY: 0x0001–0x270F (1–9999)<br>MM: 0x01–0x0C (1–12)<br>DD: 0x01–0x1F (1–31)<br>5th–7th bytes: time of measurement<br>hh: 0x00-0x17 (0-23)<br>mm: 0x00-0x3B (0–59)<br>ss: 0x00–0x3B (0–59)<br>8th–11th bytes: Cumulative amount of active electric energy (normal direction)<br>0x00000000–0x05F5E0FF (0–99,999,999)<br>12th–15th bytes: Cumulative amount of active electric energy (reverse direction)<br>0x00000000–0x05F5E0FF (0–99,999,999) | | | | | | | |



© 2000 - 2023 ECHONET Consortium

| | | | | | | | | | |
|---|---|---|---|---|---|---|---|---|---|
| Number of effective digits for cumulative amount of active electric energy | 0xE5 | This property indicates the number of effective digits for cumulative amounts of active electric energy.<br>0x01–0x08<br>(1–8) | Unsigned char | 1 bytes | digit | Get | ○ | | |
| Unit for cumulative amounts of active electric energy | 0xE6 | This property indicates the unit for measured cumulative active electric energy and historical data (multiplying factors).<br>0x00: 1 kWh<br>0x01: 0.1 kWh<br>0x02: 0.01 kWh<br>0x03: 0.001 kWh<br>0x04: 0.0001 kWh<br>0x0A: 10 kWh<br>0x0B: 100 kWh<br>0x0C: 1000 kWh<br>0x0D: 10000 kWh<br>0x0E: 100000kWh | Unsigned char | 1 bytes | | Get | ○ | | |
| Historical data of measured cumulative amount of active electric energy (normal direction) | 0xE7 | This property indicates the historical data of measured cumulative amount of active electric energy on the retrieval day specified under “day for which the historical data of measured cumulative amounts of electric energy is to be retrieved”, equaling 48 pieces of half-hourly data for 24 hours (00:00-23:30) of the day by time series from the highest-order byte.<br>1st–2nd bytes: Day for which the historical data of measured cumulative amounts of electric energy is to be retrieved<br>0x0000–0x0063 (0–99)<br>3rd–194th bytes: Cumulative amount of active electric energy (normal direction)<br>0x00000000–0x05F5E0FF<br>(0–99,999,999) | Unsigned short<br>＋<br>Unsigned long<br>× 48 | 194 bytes | kWh | Get | ○ | | |
| Historical data of measured cumulative amount of active electric energy (reverse direction) | 0xE8 | This property indicates the historical data of measured cumulative amount of active electric energy on the retrieval day specified under “day for which the historical data of measured cumulative amounts of electric energy is to be retrieved”, equaling 48 pieces of half-hourly data for 24 hours (00:00-23:30) of the day by time series from the highest-order byte. | Unsigned short<br>＋<br>Unsigned long<br>× 48 | 194 bytes | kWh | Get | ○ | | |



© 2000 - 2023 ECHONET Consortium

| | | | | | | | | | |
|---|---|---|---|---|---|---|---|---|---|
| | | 1st–2nd bytes: Day for which the historical data of measured cumulative amounts of electric energy is to be retrieved<br>0x0000–0x0063 (0–99)<br>3rd–194th bytes: Cumulative amount of active electric energy (reverse direction)<br>0x00000000–0x05F5E0FF (0–99,999,999) | | | | | | | |
| Monthly maximum electric power demand (normal and reverse directions) | 0xC1 | This property indicates the maximum value of meter readings for electric power demand recorded between the date of the last fixed reading and the most recent measurement time.<br>1st–4th bytes: normal direction<br>0x00000000–0x05F5E0FF (0–99,999,999)<br>5th bytes: reverse direction<br>0x00000000–0x05F5E0FF (0–99,999,999) | Unsigned long + Unsigned long | 8 bytes | kW | Get | ○ | | |
| Cumulative maximum electric power demand (normal and reverse directions) | 0xC2 | This property indicates the cumulative value of meter readings for maximum electric power demand contractually fixed by the electric power company.<br>1st–4th bytes: normal direction<br>0x00000000–0x05F5E0FF (0–99,999,999)<br>5th and succeeding bytes: reverse direction<br>0x00000000–0x05F5E0FF (0–99,999,999) | Unsigned long + Unsigned long | 8 bytes | kW | Get | | | |
| Electric power demand at fixed time (30-minute average electric power) (normal and reverse directions) | 0xC3 | This property indicates the meter reading for electric power demand (30-minute average electric power) in the most recent half-hourly measurement time, with the measurement date in 4 bytes, measurement time in 3 bytes, electric power demand (30-minute average electric power) (normal direction) in 4 bytes, and electric power demand (30-minute average electric power) (reverse direction) in 4 bytes.<br>・ Date of measurement: YYYY:MM:DD<br>・Measurement time: hh:mm:ss<br>・ Electric power demand Maximum 8 digits in decimal notation | Unsigned short + Unsigned char×2 + Unsigned char×3 + Unsigned long + Unsigned long | 15 bytes | Year, month, day, hour, minute, second, kW | Get | ○ | | |



© 2000 - 2023 ECHONET Consortium

| | | | | | | | | | |
|---|---|---|---|---|---|---|---|---|---|
| | | 1st–4th bytes: Measurement date<br>YYYY: 0x0001–0x270F (1–9999)<br>MM: 0x01–0x0C (1–12)<br>DD: 0x01–0x1F (1–31)<br>5th–7th bytes: time of measurement<br>hh: 0x00-0x17 (0-23)<br>mm: 0x00-0x3B (0–59)<br>ss: 0x00–0x3B (0–59)<br>8th–11th bytes: Electric power demand (normal direction)<br>0x00000000–0x05F5E0FF (0–99,999,999)<br>12th–15th bytes: Electric power demand (reverse direction)<br>0x00000000–0x05F5E0FF (0–99,999,999) | | | | | | | |
| Number of effective digits of electric power demand | 0xC4 | This property indicates the number of effective digits of electric power demand.<br>0x01–0x08<br>(1–8) | Unsigned char | 1 bytes | digit | Get | ○ | | |
| Unit of electric power demand | 0xC5 | This property indicates units of monthly maximum electric power demand, and electric power demand at fixed time (30-minute average electric power).<br>0x00: 1kW<br>0x01: 0.1kW<br>0x02: 0.01kW<br>0x03: 0.001kW<br>0x04: 0.0001kW<br>0x0A: 10kW<br>0x0B: 100kW<br>0x0C: 1000kW<br>0x0D: 10000kW<br>0x0E: 100000kWh | Unsigned char | 1 bytes | | Get | ○ | | |
| Historical data of measured electric power demand (normal direction) | 0xC6 | This property indicates historical data of meter readings for electric power demand at fixed time (30-minute average electric power) on the day specified under “Day for which the historical data of measured cumulative amounts of electric energy is to be retrieved”, equaling 48 pieces of half-hourly data for 24 hours (00:00-23:30) of the day by time series from the highest-order byte.<br>1st–2nd bytes: Day for which the historical data of measured cumulative amounts of electric energy is to be retrieved<br>0x0000–0x0063 (0–99)<br>3rd–194th bytes: Electric power demand (normal direction)<br>0x00000000–0x05F5E0FF (0–99,999,999) | Unsigned short<br>＋<br>Unsigned long<br>× 48 | 194 bytes | kW | Get | ○ | | |



© 2000 - 2023 ECHONET Consortium

| | | | | | | | | | |
|---|---|---|---|---|---|---|---|---|---|
| Historical data of measured electric power demand (reverse direction) | 0xC8 | This property indicates historical data of meter readings for electric power demand at fixed time (30-minute average electric power) on the day specified under "Day for which the historical data of measured cumulative amounts of electric energy is to be retrieved", equaling 48 pieces of half-hourly data for 24 hours (00:00-23:30) of the day by time series from the highest-order byte.<br>1st–2nd bytes: Day for which the historical data of measured cumulative amounts of electric energy is to be retrieved<br>0x0000–0x0063 (0–99)<br>3rd–194th bytes: Electric power demand (reverse direction)<br>0x00000000–0x05F5E0FF (0–99,999,999) | Unsigned short ＋ Unsigned long × 48 | 194 bytes | kW | Get | ○ | | |
| Unit of cumulative maximum electric power demand | 0xC7 | This property indicates the unit of cumulative maximum electric power demand.<br>0x00: 1kW<br>0x01: 0.1kW<br>0x02: 0.01kW<br>0x03: 0.001kW<br>0x04: 0.0001kW<br>0x0A: 10kW<br>0x0B: 100kW<br>0x0C: 1000kW<br>0x0D: 10000kW<br>0x0E: 100000kWh | Unsigned char | 1 bytes | | Get | | | |
| Measurement data of cumulative amount of reactive electric energy (lag) for power factor measurement (normal and reverse directions) | 0xCA | This property indicates the meter readings for the measurement data of cumulative amount of reactive electric energy (lag) for power factor measurement at the most recent measurement time, with the measurement date in 4 bytes, measurement time in 3 bytes, and cumulative amount of reactive electric energy (normal direction) in 4 bytes, and cumulative amount of reactive electric energy (reverse direction) in 4 bytes.<br>・ Date of measurement: YYYY:MM:DD<br>・Measurement time: hh:mm:ss<br>・Cumulative amount of reactive electric energy (lag) Maximum 8 digits in decimal notation | Unsigned short ＋ Unsigned char×2 ＋ Unsigned char×3 ＋ Unsigned long ＋ Unsigned long | 15 bytes | Year, month, day, hour, minute, second, kvarh | Get | | | |



© 2000 - 2023 ECHONET Consortium

| | | | | | | | | | |
|---|---|---|---|---|---|---|---|---|---|
| | | 1st–4th bytes: Measurement date<br>YYYY: 0x0001–0x270F (1–9999)<br>MM: 0x01–0x0C (1–12)<br>DD: 0x01–0x1F (1–31)<br>5th–7th bytes: time of measurement<br>hh: 0x00-0x17 (0-23)<br>mm: 0x00-0x3B (0–59)<br>ss: 0x00–0x3B (0–59)<br>8th–11th bytes: Cumulative amount of reactive electric energy (lag) (normal direction)<br>0x00000000–0x05F5E0FF (0–99,999,999)<br>12th–15th bytes: Cumulative amount of reactive electric energy (lag) (reverse direction)<br>0x00000000–0x05F5E0FF (0–99,999,999) | | | | | | | |
| Measurement data of cumulative amount of reactive electric energy (lag) at fixed time for power factor measurement (normal and reverse directions) | 0xCB | This property indicates the meter readings for measurement data of cumulative amount of reactive electric power for power factor measurement at the most recent thirty-minute measurement time, with the measurement date in 4 bytes, measurement time in 3 bytes, cumulative amount of reactive electric energy (normal direction) in 4 bytes, and cumulative amount of reactive electric energy (reverse direction) in 4 bytes.<br>・ Date of measurement: YYYY:MM:DD<br>・Measurement time: hh:mm:ss<br>・Cumulative amount of reactive electric energy (lag) Maximum 8 digits in decimal notation | Unsigned short<br>＋<br>Unsigned char×2<br>＋<br>Unsigned char×3<br>＋<br>Unsigned long<br>＋<br>Unsigned long | 15 bytes | Year, month, day, hour, minute, second, kvarh | Get | | | |



© 2000 - 2023 ECHONET Consortium

| | | | | | | | | | |
|---|---|---|---|---|---|---|---|---|---|
| | | 1st–4th bytes: Measurement date<br>YYYY: 0x0001–0x270F (1–9999)<br>MM: 0x01–0x0C (1–12)<br>DD: 0x01–0x1F (1–31)<br>5th–7th bytes: time of measurement<br>hh: 0x00-0x17 (0-23)<br>mm: 0x00-0x3B (0–59)<br>ss: 0x00–0x3B (0–59)<br>8th–11th bytes: Cumulative amount of reactive electric energy (lag) (normal direction)<br>0x00000000–0x05F5E0FF (0–99,999,999)<br>12th–15th bytes: Cumulative amount of reactive electric energy (lag) (reverse direction)<br>0x00000000–0x05F5E0FF (0–99,999,999) | | | | | | | |
| Number of effective digits for cumulative amount of reactive electric energy | 0xCC | This property indicates the number of effective digits of measured data of cumulative amount of reactive electric energy (lag).<br>0x01–0x08 (1–8) | Unsigned char | 1 bytes | digit | Get | | | |
| Unit for cumulative amounts of reactive electric energy | 0xCD | This property indicates the unit (multiplying factor) for measurement data of cumulative amount of reactive electric energy (lag) and historical data.<br>0x00: 1 kvarh<br>0x01: 0.1 kvarh<br>0x02: 0.01 kvarh<br>0x03: 0.001 kvarh<br>0x04: 0.0001 kvarh<br>0x0A: 10 kvarh<br>0x0B: 100 kvarh<br>0x0C: 1000 kvarh<br>0x0D: 10000 kvarh<br>0x0E: 100000 kvarh | Unsigned char | 1 bytes | | Get | | | |
| Historical data of measurement data of cumulative amount of reactive electric energy (lag) for power factor measurement (normal direction) | 0xCE | This property indicates historical data for cumulative amount of reactive electric energy (lag) measurements at fixed time on the day specified under “day for which the historical data of measured cumulative amounts of electric energy is to be retrieved”, equaling 48 pieces of half-hourly data for 24 hours (00:00–23:30) of the day by time series from the highest-order byte. | Unsigned short<br>＋<br>Unsigned long<br>× 48 | 194 bytes | kvarh | Get | | | |



© 2000 - 2023 ECHONET Consortium

| | | | | | | | | | |
|---|---|---|---|---|---|---|---|---|---|
| | | 1st–2nd bytes: Day for which the historical data of measured cumulative amounts of electric energy is to be retrieved<br>0x0000–0x0063 (0–99)<br>3rd–194th bytes: Cumulative amount of reactive electric energy (lag) (normal direction)<br>0x00000000–0x05F5E0FF (0–99,999,999) | | | | | | | |
| Historical data of measurement data of cumulative amount of reactive electric energy (lag) for power factor measurement (reverse direction) | 0xCF | This property indicates historical data for cumulative amount of reactive electric energy (lag) measurements at fixed time on the day specified under "day for which the historical data of measured cumulative amounts of electric energy is to be retrieved", equaling 48 pieces of half-hourly data for 24 hours (00:00–23:30) of the day by time series from the highest-order byte.<br>1st–2nd bytes: Day for which the historical data of measured cumulative amounts of electric energy is to be retrieved<br>0x0000–0x0063 (0–99)<br>3rd–194th bytes: Cumulative amount of reactive electric energy (lag) (reverse direction)<br>0x00000000–0x05F5E0FF (0–99,999,999) | Unsigned short<br>＋<br>Unsigned long<br>× 48 | 194 bytes | kvarh | Get | | | |
| Present values of measured cumulative amount of reactive electric energy (lag) (normal and reverse directions) | 0xD5 | This property indicates the meter readings for the data of reactive electric energy (lag) at the most recent measurement time, with the measurement date in 4 bytes, measurement time in 3 bytes, and cumulative amount of reactive electric energy in 4 bytes (normal direction), and cumulative amount of reactive electric energy in 4 bytes (reverse direction).<br>・ Date of measurement: YYYY:MM:DD<br>・Measurement time: hh:mm:ss<br>・ Cumulative amount of reactive electric energy (lag) Maximum 8 digits in decimal notation | Unsigned short<br>＋<br>Unsigned char×2<br>＋<br>Unsigned char×3<br>＋<br>Unsigned long<br>＋<br>Unsigned long | 15 bytes | Year, month, day, hour, minute, second, kvarh | Get | | | |



© 2000 - 2023 ECHONET Consortium

| | | | | | | | | | |
|---|---|---|---|---|---|---|---|---|---|
| | | 1st–4th bytes: Measurement date<br>YYYY: 0x0001–0x270F (1–9999)<br>MM: 0x01–0x0C (1–12)<br>DD: 0x01–0x1F (1–31)<br>5th–7th bytes: time of measurement<br>hh: 0x00-0x17 (0-23)<br>mm: 0x00-0x3B (0–59)<br>ss: 0x00–0x3B (0–59)<br>8th–11th bytes: Cumulative amount of reactive electric energy (lag) (normal direction)<br>0x00000000–0x05F5E0FF (0–99,999,999)<br>12th–15th bytes: Cumulative amount of reactive electric energy (lag) (reverse direction)<br>0x00000000–0x05F5E0FF (0–99,999,999) | | | | | | | |
| Present values of measured cumulative amount of reactive electric energy (lead) (normal and reverse directions) | 0xD6 | This property indicates the meter readings for the data of reactive electric energy (lead) at the most recent measurement time, with the measurement date in 4 bytes, measurement time in 3 bytes, cumulative amount of reactive electric energy in 4 bytes (normal direction), and cumulative amount of reactive electric energy in 4 bytes (reverse direction).<br>・ Date of measurement: YYYY:MM:DD<br>・Measurement time: hh:mm:ss<br>・Cumulative amount of reactive electric energy (lead) Maximum 8 digits in decimal notation | Unsigned short ＋ Unsigned char×2 ＋ Unsigned char×3 ＋ Unsigned long ＋ Unsigned long | 15 bytes | Year, month, day, hour, minute, second, kVarh kvarh | Get | | | |
| | | 1st–4th bytes: Measurement date<br>YYYY: 0x0001–0x270F (1–9999)<br>MM: 0x01–0x0C (1–12)<br>DD: 0x01–0x1F (1–31)<br>5th–7th bytes: time of measurement<br>hh: 0x00-0x17 (0-23)<br>mm: 0x00-0x3B (0–59)<br>ss: 0x00–0x3B (0–59)<br>8th–11th bytes: Cumulative amount of reactive electric energy (lead) (normal direction)<br>0x00000000–0x05F5E0FF (0–99,999,999)<br>12th–15th bytes: Cumulative amount of reactive electric energy (lead) (reverse direction)<br>0x00000000–0x05F5E0FF (0–99,999,999) | | | | | | | |



© 2000 - 2023 ECHONET Consortium

| | | | | | | | | | |
|---|---|---|---|---|---|---|---|---|---|
| Measured instantaneous electric energy | 0xEA | This property indicates the measured effective instantaneous electric energy in units of 1W.<br>0x80000001–0x7FFFFFFD (-2,147,483,647–2,147,483,645) | signed long | 4 bytes | W | Get | ○ | | |
| Measured instantaneous currents 2 | 0xEB | This property indicates the value of effective instantaneous R and T phase currents in 0.1A unit.<br>In the case of a single-phase, two-wire system, 0x7FFFFFF~~F~~E shall be used for the T phase.<br>0x80000001 to 0x7FFFFFF~~F~~D (R phase): 0x80000001 to 0x7FFFFFF~~F~~D (T phase) (-214,748,364.7–214,748,364.5): (-214,748,364.7–214,748,364.5) | signed long × 2 | 8 bytes | 0.1 A | Get | ○ | | |
| Historical data of measured cumulative amount of active electric energy 2 (normal and reverse directions) | 0xED | This property indicates the historical data of measured cumulative amounts of electric energy every 1 minutes for up to a max. 10-minute data in the form of date and time for which the historical data of measured cumulative amounts of electric energy is to be retrieved, the number of collection segments, and cumulative amount of electric energy (8 digits max).<br>・Date and time for which the historical data is to be retrieved<br>YYYY:MM:DD:hh:mm<br>・Number of collection segments<br>・Cumulative amounts of electric energy<br>Maximum 8 digits in decimal notation (up to 10 minutes max) | Unsigned short ＋ Unsigned char × 4 ＋ Unsigned char ＋ (unsigned long ＋ Unsigned Long) × (Max) 10 | Max 87 bytes | Year, month, day, hour, minute, kWh kWh | Get | ○ | | |



© 2000 - 2023 ECHONET Consortium

| | | | | | | | | | |
|---|---|---|---|---|---|---|---|---|---|
| | | 1st–6th bytes: date and time for which the historical data is to be retrieved<br>YYYY: 0x0001–0x270F<br>(1–9999 year)<br>MM: 0x01–0x0C (1–12 month)<br>DD: 0x01–0x1F (1–31 day)<br>hh: 0x00–0x17 (0–23 hour)<br>mm: 0x00–0x3B (0–59 minute)<br>7th byte: number of collection segments<br>0x01–0x0A (1–10 piece)<br>8th and following bytes:<br>Measured cumulative amount of active electric energy (normal direction)<br>0x00000000–0x05F5E0FF (0–99,999,999)<br>Measured cumulative amount of active electric energy (reverse direction)<br>0x00000000–0x05F5E0FF (0–99,999,999) | | | | | | | |
| Historical data of measurement data of cumulative amount of reactive electric energy (lag) for power factor measurement 2 (normal and reverse directions) | 0xEE | This property indicates the historical data of measured cumulative amounts of electric energy every 1 minutes for up to a max. 10-minute data in the form of date and time for which the historical data of measured cumulative amounts of electric energy is to be retrieved, the number of collection segments, and cumulative amount of electric energy (8 digits max).<br>・Date and time for which the historical data is to be retrieved<br>YYYY:MM:DD:hh:mm<br>・Number of collection segments<br>・Cumulative amounts of electric energy<br>Maximum 8 digits in decimal notation (up to 10 minutes) | Unsigned short<br>＋<br>Unsigned char<br>× 4<br>＋<br>Unsigned char<br>＋<br>(Unsigned long<br>＋<br>Unsigned Long)<br>×<br>(Max) 10 | Max 87 bytes | year, month, day, hour, minute, kWh kWh | Get | | | |



© 2000 - 2023 ECHONET Consortium

| | | | | | | | | | |
|---|---|---|---|---|---|---|---|---|---|
| | | 1st–6th bytes: date and time for which the historical data is to be retrieved<br>YYYY: 0x0001–0x270F (1–9999 year)<br>MM: 0x01–0x0C (1–12 month)<br>DD: 0x01–0x1F (1–31 day)<br>hh: 0x00–0x17 (0–23 hour)<br>mm: 0x00–0x3B (0–59 minute)<br>7th byte: number of collection segments<br>0x01–0x0A (1–10 piece)<br>8th and following bytes:<br>Measured cumulative amount of reactive electric energy for power factor (normal direction)<br>0x00000000–0x05F5E0FF (0–99,999,999)<br>Measured cumulative amount of reactive electric energy for power factor (reverse direction)<br>0x00000000–0x05F5E0FF (0–99,999,999) | | | | | | | |
| Day for which the historical data of measured cumulative amounts of electric energy is to be retrieved 2 | 0xEF | This property indicates the date and time of historical data of measurements (every 1 minute) and the number of segments where measurement historical data measured at 1-minute intervals.<br>1st–6th bytes: date and time for which the historical data is to be retrieved<br>YYYY: 0x0001–0x270F (1–9999 year)<br>MM: 0x01–0x0C (1–12 month)<br>DD: 0x01–0x1F (1–31 day)<br>hh: 0x00–0x17 (0–23 hour)<br>mm: 0x00–0x3B (0–59 minute)<br>7th byte: number of collection segments<br>0x01–0x0A (1–10 piece) | Unsigned short + Unsigned char × 4 + Unsigned char | 7 bytes | | Set/ Get | ○ | | |

Note 1: In the “Announcement at status change” column, ○ denotes mandatory processing when the property is implemented.

Note 2: *1 Bidirectional high voltage smart electric energy meters in Japan must be equipped with this property.

This class is used in the case of smart electric energy meters installed for users supplied with voltage of 6.6kV or higher.

In the case of smart electric energy meters installed for users supplied with 400V or less, the low -voltage smart electric energy meter class (Class group code: 0x02, Class code: 0x88) shall be used.



© 2000 - 2023 ECHONET Consortium

(1) Operation status

This property indicates whether the functions specific to this class are operating (ON) or not (OFF). In the case of a node in which this class is implemented and the functions specific to this class start operating upon startup of the node, this property may be implemented with the value fixed at 0x30 (operation status ON).

(2) Route B Identification number

This property indicates a number that allows high-voltage smart electric energy meters to be uniquely identified in the domain.

In the case of a high-voltage smart meters installed by a General Electricity Transmission and Distribution Utility in Japan that comply with the EMS/aggregation controller smart meters Route B (high-voltage smart meter) operational guidelines [Version 2.0] or later, this property shall be indicated in 16 bytes of the Route B authentication ID. The 1st to 4th bytes are the smart meter installation business operator–specified area of the Route B authentication ID. The 1st byte shall be fixed at 0x00, and the 2nd to 4th bytes shall be the manufacturer codes. The 5th and following bytes are free space for the Route B authentication ID.

(3) One-minute measured cumulative amount of active electric energy (normal and reverse directions)

This property indicates cumulative amount of active electric energy at the most recent measurement time retained by the meter, out of the meter readings for the cumulative amounts of active electric energy measured at 1-minute intervals, in the order of measurement date in 4 bytes, measurement time in 3 bytes, cumulative amount of active electric energy in 4 bytes (normal direction), and the cumulative amount of active electric energy in 4 bytes (reverse direction). The measurement date is indicated using 2 bytes for the year, 1 byte for the month, and 1 byte for the day. The measurement time is indicated using 1 byte for hours, 1 byte for minutes, and 1 byte for seconds. If the meter does not have information on seconds as a unit of measured time, 0x00 is set for seconds. The cumulative amount of active electric energy is indicated using a maximum of 8 digits in decimal notation, with units indicated by property values of the unit for cumulative amounts of active electric energy (EPC=0xE6). Also, measurements are multiplied by the coefficient (EPC=0xD3) and the multiplying factor for the coefficient (EPC=0xD4) to produce the electric energy amount. The property value range is 0x00000000-0x05F5E0FF (0-99,999,999). If the cumulative amount of active electric energy exceeds the number of effective digits specified by number of effective digits for cumulative amount of active electric energy (EPC=0xE5), the value shall be incremented again from 0x00000000(0). The value shall be set to 0xFFFFFFFE (no measured data) in the case of no cumulative amount of active electric energy.



© 2000 - 2023 ECHONET Consortium

(Example)

One-minute measured cumulative amount of active electric energy

・YYYY = 0x07E7 (2023), MM = 0x04 (April), DD = 0x01 (day 1)

・hh = 0x0A (hour: 10), mm = 0x23 (minute: 35), ss = 0x00 (second:00)

・Cumulative amount of active electric energy = 0x00BC614E (12345678)

Coefficient (EPC=0xD3): 0x00000001 (1)

Multiplying factor for coefficient (EPC=0xD4): 0x00 (1)

Unit for cumulative amounts of active electric energy (EPC=0xE6): 0x01 (0.1kWh)

In this case,

Measurement date April 1, 2023

Measurement time 10:35:00

Cumulative amount of active electric energy (primary side measured value (actual usage))

One-minute measured cumulative amount of active electric energy × coefficient × multiplying factor for coefficient × unit for cumulative amounts of active electric energy

= 12345678 × 1 × 1 × 0.1kWh = 1234567.8kWh

(4) One-minute measurement data of cumulative amount of reactive electric energy (lag) for power factor measurement (normal and reverse directions)

This property indicates cumulative amount of reactive electric energy (lag) for power factor measurement at the most recent measurement time retained by the meter, out of the meter readings for the cumulative amounts of reactive electric energy (lag) for power factor measured at 1-minute intervals, in the order of measurement date in 4 bytes, measurement time in 3 bytes, cumulative amount of reactive electric energy in 4 bytes (normal direction), and cumulative amount of reactive electric energy in 4 bytes (reverse direction). The measurement date is indicated using 2 bytes for the year, 1 byte for the month, and 1 byte for the day. The measurement time is indicated using 1 byte for hours, 1 byte for minutes, and 1 byte for seconds. If the meter does not have information on seconds as a unit of measured time, 0x00 is set for seconds. The cumulative amount of reactive electric energy is indicated using a maximum 8 digits in decimal notation, with units indicated by the property values of unit of measurement data of cumulative amount of reactive electric energy (lag) for power factor (EPC=0xCD). Also, Measurements are multiplied by the coefficient (EPC=0xD3) and the multiplying factor for coefficient (EPC=0xD4) are the electric energy amount.

The property value range is 0x00000000-0x05F5E0FF (0-99,999,999). If the cumulative amount of reactive electric energy exceeds the number of effective digits specified by number of effective digits for cumulative amount of reactive electric energy (lag) for power factor (EPC=0xCC), the value shall be incremented again from 0x00000000(0). The value shall be set to 0xFFFFFFFE (no measured data) in the case of no cumulative amount of reactive electric energy (lag) for power factor.



© 2000 - 2023 ECHONET Consortium

(Example)

One-minute measurement data of cumulative amount of reactive electric energy (lag) for power factor

・YYYY = 0x07E7 (2023), MM = 0x04 (April), DD = 0x01 (day 1)

・hh = 0x0A (hour:10), mm = 0x32 (minute:35), ss = 0x00 (second:00)

・Cumulative amount of reactive electric energy (lag) = 0x00BC614E (12345678)

Coefficient (EPC=0xD3): 0x00000001 (1)

Multiplying factor for coefficient (EPC=0xD4): 0x00 (1)

Unit of measurement data of cumulative amount of reactive electric energy (lag) for power factor (EPC=0xCD): 0x01 (0.1kWh)

In this case,

Measurement date April 1, 2023

Measurement time 10:35:00

Cumulative amount of reactive electric energy (lag) (primary side measured value (actual usage))

One-minute measurement data of cumulative amount of reactive electric energy (lag) for power factor × coefficient × multiplying factor for coefficient × Unit of measurement data of cumulative amount of reactive electric energy (lag) for power factor

= 12345678 × 1 × 1 × 0.1kvarh = 1234567.8 kvarh

(5) Coefficient

This property indicates the coefficient using a 6-digit decimal notation. The numerical value by the multiplying factor for the coefficient shall be used as the coefficient for converting meter readings to actually used kWh, kvarh or kW.

(6) Multiplying factor for coefficient

This property indicates the multiplying factor for coefficient. Meter readings can be converted to actually used kWh, kvarh or kW by multiplying by the coefficient and the multiplying factor for the coefficient.

With a 6.6kV supply, meters cannot be connected directly to power supply circuits. In such cases, electric energy and others are measured by means of a voltage transformer (VT) and current transformer (CT). Meter readings taken using a voltage transformer and current transformer are converted to primary side measured values representing actual usage, etc., by multiplying by the coefficient and the multiplying factor for the coefficient.

(Example)



© 2000 - 2023 ECHONET Consortium

Coefficient = 0x00000001 (1)

Multiplying factor for coefficient = 0x00 (1)

Measured cumulative amount of active electric energy (EPC=0xE2): 0x00BC614E (12345678)

Unit for cumulative amounts of active electric energy (EPC=0xE6): 0x01 (0.1kWh)

In this case, measurements of the primary side (actual usage) will be:

Measured cumulative amount of active electric energy × coefficient × multiplying factor for coefficient × unit for cumulative amounts of active electric energy

= 12345678 × 1 × 1 × 0.1kWh = 1234567.8kWh

(7) Fixed date

This property indicates the fixed date of monthly usage, etc., as 0x01-0x1F (1-31). If the fixed date is the 10th, the value will be 0x0A (10).

(8) Day for which the historical data of measured cumulative amounts of electric energy is to be retrieved.

This property specifies the day for which the historical data of measured cumulative amount of active electric energy (EPC=0xE7), the historical data of measured electric power demand (EPC=0xC6), and the historical data of measurement data of cumulative amount of reactive electric energy (lag) for power factor (EPC=0xCE) are to be retrieved. The value range is from 0x00 to 0x63 (from 0 to 99).

0x00 (0): measured historical data for the current day (up to the last hour)

0x63 (99): measured historical data for the day that precedes the current day by 99 days

The default values of this property shall be 0xFF.

(9) Measured cumulative amounts of active electric energy (normal and reverse directions)

This property indicates meter readings for the measured cumulative amount of active electric energy in the order of measurement date in 4 bytes, measurement time in 3 bytes, cumulative amount of active electric energy in 4 bytes (normal direction), and cumulative amount of active electric energy in 4 bytes (reverse direction). The measurement date is indicated using 2 bytes for the year, 1 byte for the month, and 1 byte for the day. The measurement time is indicated using 1 byte for hours, 1 byte for minutes, and 1 byte for seconds. If the meter does not have information on seconds as a unit of measured time, 0x00 is set for seconds. The cumulative amount of active electric energy is indicated using a maximum of 8 digits in decimal notation, with units indicated by property values of the unit for cumulative amounts of active electric energy (EPC=0xE6). Also, the coefficient (EPC=0xD3) and the value multiplying factor for the coefficient (EPC=0xD4) are the value actually used.

The property value range is 0x00000000-0x05F5E0FF (0-99,999,999). If the cumulative amount of active electric energy exceeds the number of effective digits specified by number of effective digits for cumulative amount of active electric energy (EPC=0xE5), the value shall be incremented again from



© 2000 - 2023 ECHONET Consortium

0x00000000(0). The value shall be set to 0xFFFFFFFE (no measured data) in the case of no cumulative amount of active electric energy.

(Example)

Measured cumulative amount of active electric energy = 0x00BC614E (12345678)

Coefficient (EPC=0xD3): 0x00000001 (1)

Multiplying factor for coefficient (EPC=0xD4): 0x00 (1)

Unit for cumulative amounts of active electric energy (EPC=0xE6): 0x01 (0.1kWh)

In this case, measurements of the primary side (actual usage) will be:

Measured cumulative amount of active electric energy × coefficient × multiplying factor for coefficient × unit for cumulative amounts of active electric energy

= 12345678 × 1 × 1 × 0.1kWh = 1234567.8kWh

(10) Measured cumulative amount of active electric energy at fixed time (normal and reverse directions)

This property indicates cumulative amount of active electric energy at the most recent scheduled measurement time retained by the meter, out of the meter readings for the cumulative amounts of active electric energy measured every 30 minutes at 00 minutes and 30 minutes, in the order of measurement date in 4 bytes, measurement time in 3 bytes, cumulative amount of active electric energy in 4 bytes (normal direction), and cumulative amount of active electric energy in 4 bytes (reverse direction). The measurement date is indicated using 2 bytes for the year, 1 byte for the month, and 1 byte for the day. The measurement time is indicated using 1 byte for hours, 1 byte for minutes, and 1 byte for seconds. If the meter does not have information on seconds as a unit of measured time, 0x00 is set for seconds. The cumulative amount of active electric energy is indicated using a maximum of 8 digits in decimal notation, with units indicated by property values of the unit for cumulative amounts of active electric energy (EPC=0xE6). Also, measurements are multiplied by the coefficient (EPC=0xD3) and multiplying factor for the coefficient (EPC=0xD4) to produce the value actually used. The property value range is 0x00000000-0x05F5E0FF (0-99,999,999). If the cumulative amount of active electric energy exceeds the number of effective digits specified by number of effective digits for cumulative amount of active electric energy (EPC=0xE5), the value shall be incremented again from 0x00000000(0). The value shall be set to 0xFFFFFFFE (no measured data) in the case of no cumulative amount of active electric energy.

(Example)

Cumulative amounts of active electric energy at fixed time

・YYYY = 0x07E7 (2023), MM = 0x04 (April), DD = 0x01 (day 1)

・hh = 0x0A (hour:10), mm = 0x1E (minute:30), ss = 0x00 (second:00)

・Cumulative amount of active electric energy = 0x00BC614E (12345678)

Coefficient (EPC=0xD3): 0x00000001 (1)



© 2000 - 2023 ECHONET Consortium

Multiplying factor for coefficient (EPC=0xD4): 0x00 (1)

Unit for cumulative amounts of active electric energy (EPC=0xE6): 0x01 (0.1kWh)

In this case,

Measurement date April 1, 2023

Measurement time 10:30:00

Cumulative amount of active electric energy (primary side measured value (actual usage))

Measured cumulative amount of active electric energy at fixed time × coefficient × multiplying factor for coefficient × unit for cumulative amounts of active electric energy

= 12345678 × 1 × 1 × 0.1kWh = 1234567.8kWh

(11) Measurement data of cumulative amount of active electric energy for power factor measurement (normal and reverse directions)

This property indicates the meter readings for the measurement data of cumulative amounts of active electric energy for power factor, in the order of measurement date in 4 bytes, measurement time in 3 bytes, cumulative amount of active electric energy (normal direction) in 4 bytes, and cumulative amount of active electric energy (reverse direction) in 4 bytes. The measurement date is indicated using 2 bytes for the year, 1 byte for the month, and 1 byte for the day. The measurement time is indicated using 1 byte for hours, 1 byte for minutes, and 1 byte for seconds. If the meter does not have information on seconds as a unit of measured time, 0x00 is set for seconds. The cumulative amount of active electric energy is indicated using a maximum of 8 digits in decimal notation, with units indicated by property values of the unit for cumulative amounts of active electric energy (EPC=0xE6). Also, measurements are multiplied by the coefficient (EPC=0xD3) and the multiplying factor for coefficient (EPC=0xD4) to produce the value actually used.

Note "Cumulative amount of active electric energy for power factor measurement " is the cumulative amount of active electric energy in daytime (e.g., 8:00 to 22:00 in a day).

The property value range is 0x00000000-0x05F5E0FF (0-99,999,999). If the cumulative amount of active electric energy exceeds the number of effective digits specified by number of effective digits for cumulative amount of active electric energy (EPC=0xE5), the value shall be incremented again from 0x00000000(0). The value shall be set to 0xFFFFFFFE (no measured data) in the case of no cumulative amount of active electric energy.

(Example)

Measurement data of cumulative amount of active electric energy for power factor = 0x00BC614E (12345678)

Coefficient (EPC=0xD3): 0x00000001 (1)



© 2000 - 2023 ECHONET Consortium

Multiplying factor for coefficient (EPC=0xD4): 0x00 (1)

Unit for cumulative amounts of active electric energy (EPC=0xE6): 0x01 (0.1kWh)

In this case, measurements of the primary side (actual usage) will be:

Measurement data of cumulative amount of active electric energy for power factor coefficient × multiplying factor for coefficient × unit for cumulative amounts of active electric energy

= 12345678 × 1 × 1 × 0.1kWh = 1234567.8kWh

(12) Number of effective digits for cumulative amount of active electric energy

This property indicates the number of effective digits (effective digit count) for the data size of measured cumulative amounts of active electric energy (4 bytes: as a digit count, 8 digits), from the lower order side within these.

(Example)

Number of effective digits for cumulative amount of active electric energy is 0x08 (8 digits from the lower order side)

Cumulative amount of active electric energy overflows at 0x5F5E0FF (99999999), and the value shall be incremented again from 0x00000000(0).

(13) Unit for cumulative amounts of active electric energy (normal and reverse directions)

This property indicates units of measured cumulative amounts of active electric energy and historical data.

Property values: Unit for cumulative amounts of active electric energy (multiplying factor)

0x00: 1 kWh

0x01: 0.1 kWh

0x02: 0.01 kWh

0x03: 0.001 kWh

0x04: 0.0001 kWh

0x0A: 10 kWh

0x0B: 100 kWh

0x0C: 1000 kWh

0x0D: 10000 kWh

0x0E: 100000 kWh

(14) Historical data on measured cumulative amounts of electric energy (normal direction)

This property indicates the day for which the historical data of measured cumulative amounts of electric energy is to be retrieved (EPC=0xE1) in 2 bytes as 0x0000-0x0063 (0-99), and meter readings of the



© 2000 - 2023 ECHONET Consortium

measured cumulative amounts of active electric energy (normal direction) at every 30 minutes at 00 and 30 minutes of the day, equaling 48 pieces for 24 hours (00:00-23:30), as the historical data by time series from the highest-order byte. The cumulative amount of active electric energy is indicated in a maximum of 8 digits in decimal notation, with units indicated by property values of the unit for cumulative amounts of active electric energy (EPC=0xE6). Also, measurements are multiplied by the coefficient (EPC=0xD3) and multiplying factor for coefficient (EPC=0xD4) to produce the value actually used.

The property value range is 0x00000000-0x05F5E0FF (0-99,999,999). If the cumulative amount of active electric energy exceeds the number of effective digits specified by number of effective digits for cumulative amount of active electric energy (EPC=0xE5), the value shall be incremented again from 0x00000000(0). The value shall be set to 0xFFFFFFFE (no measured data) in the case of no cumulative amount of active electric energy at the time in question.

In the case of default values with no day for which the historical data of cumulative amounts of electric energy is to be retrieved (EPC=0xE1) has been set, the day for which the historical data of cumulative amounts of electric energy is to be retrieved shall be set to 0x00FF and all half-hourly measurements of cumulative amounts of active electric energy shall be set to 0xFFFFFFFE.

(15) Historical data of measured cumulative amounts of active electric energy (reverse direction)

This property indicates the day for which the historical data of measured cumulative amounts of electric energy is to be retrieved (EPC=0xE1) in 2 bytes as 0x0000-0x0063 (0-99), and meter readings of the measured cumulative amounts of active electric energy (reverse direction) at every 30 minutes at 00 and 30 minutes of the day, equaling 48 pieces for 24 hours (00:00-23:30), as the historical data by time series from the highest-order byte. The cumulative amount of active electric energy is indicated in a maximum of 8 digits in decimal notation, with units indicated by property values of the unit for cumulative amounts of active electric energy (EPC=0xE6). Also, measurements are multiplied by the coefficient (EPC=0xD3) and multiplying factor for coefficient (EPC=0xD4) to produce the value actually used.

The property value range is 0x00000000-0x05F5E0FF (0-99,999,999). If the cumulative amount of active electric energy exceeds the number of effective digits specified by number of effective digits for cumulative amount of active electric energy (EPC=0xE5), the value shall be incremented again from 0x00000000(0). The value shall be set to 0xFFFFFFFE (no measured data) in the case of no cumulative amount of active electric energy at the time in question.

In the case of default values with no day for which the historical data of cumulative amounts of electric energy is to be retrieved (EPC=0xE1) has been set, the day for which the historical data of cumulative amounts of electric energy is to be retrieved shall be set to 0x00FF and all half-hourly measurements of cumulative amounts of active electric energy shall be set to 0xFFFFFFFE.



© 2000 - 2023 ECHONET Consortium

(16) Monthly maximum electric power demand (normal and reverse directions)

This property indicates the maximum value of meter readings for electric power demand (normal and reverse directions) recorded at 00 and 30 minutes every hour between the date of the last fixed date and the most recent measurement time.

Monthly maximum electric power demand is indicated using a maximum of 8 digits in decimal notation, with units indicated by property values of the unit of electric power demand (EPC=0xC5). Also, measurements are multiplied by the coefficient (EPC=0xD3) and multiplying factor for coefficient (EPC=0xD4) to produce the value actually used. The property value range is 0x00000000-0x05F5E0FF (0-99,999,999). The value shall be set to 0xFFFFFFFE (no measured data) in the case of no monthly maximum electric power demand.

(Example)

Monthly maximum electric power demand = 0x00BC614E (12345678)

Coefficient (EPC=0xD3): 0x00000001 (1)

Multiplying factor for coefficient (EPC=0xD4): 0x00 (1)

Unit of electric power demand (EPC=0xC5): 0x01 (0.1kW)

In this case, measurements of the primary side (actual usage) will be:

Monthly maximum electric power demand × coefficient × multiplying factor for coefficient × unit of electric power demand

= 12345678 × 1 × 1 × 0.1kW = 1234567.8kW

(17) Cumulative maximum electric power demand (normal and reverse directions)

This property indicates meter readings of cumulative values for maximum electric power demand (normal and reverse directions) contractually fixed by the electric power company.

Cumulative maximum electric power demand is indicated using a maximum of 8 digits in decimal notation, with units indicated by property values of the unit of electric power demand (EPC=0xC7). The property value range is 0x00000000-0x05F5E0FF (0-99,999,999). If the cumulative maximum electric power demand exceeds the number of effective digits specified by number of effective digits of electric power demand (EPC=0xC4), the value shall be incremented again from 0x00000000(0). The value shall be set to 0xFFFFFFFE (no measured data) in the case of no cumulative maximum electric power demand.

(Example)

Cumulative maximum electric power demand = 0x00BC614E (12345678)

Coefficient (EPC=0xD3): 0x00000001 (1)

Multiplying factor for coefficient (EPC=0xD4): 0x00 (1)

Unit of cumulative maximum electric power demand (EPC=0xC7): 0x01 (0.1kW)



© 2000 - 2023 ECHONET Consortium

In this case, measurements of the primary side (actual usage) will be:

Cumulative maximum electric power demand × coefficient × multiplying factor for coefficient × unit of electric power demand

= 12345678 × 1 × 1 × 0.1kW = 1234567.8kW

(18) Electric power demand at fixed time (30-minute average electric power energy) (normal and reverse directions)

This property indicates electric power demand at the most recent scheduled measurement time retained by the meter, out of the meter readings for the electric power demand (30-minute average electric power) measured every 30 minute at 00 minutes and 30 minutes, in the order of measurement date in 4 bytes, measurement time in 3 bytes, electric power demand 4 bytes (normal direction), and electric power demand 4 bytes (reverse direction). The measurement date is indicated using 2 bytes for the year, 1 byte for the month, and 1 byte for the day. The measurement time is indicated using 1 byte for hours, 1 byte for minutes, and 1 byte for seconds. If the meter does not have information on seconds as a unit of measured time, 0x00 is set for seconds. Electric power demand is indicated using a maximum of 8 digits in decimal notation, with units indicated by property values of the unit of electric power demand (EPC=0xC5). Also, measurements are multiplied by the coefficient (EPC=0xD3) and multiplying factor for the coefficient (EPC=0xD4) to produce the value actually used. The property value range is 0x00000000-0x05F5E0FF (0-99,999,999). The value shall be set to 0xFFFFFFFE (no measured data) in the case of no electric power demand.

(Example)

Electric power demand at fixed time (30-minute average electric power)

- YYYY = 0x07E7 (2023), MM = 0x04 (April), DD = 0x01 (day 1)
- hh = 0x0A (hour:10), mm = 0x1E (minute:30), ss = 0x00 (second:00)
- Electric power demand = 0x00BC614E (12345678)

Coefficient (EPC=0xD3): 0x00000001 (1)

Multiplying factor for coefficient (EPC=0xD4): 0x00 (1)

Unit of electric power demand (EPC=0xC5): 0x01 (0.1kW)

In this case,

Measurement date April 1, 2023

Measurement time 10:30:00

Electric power demand (30-minute average electric power) (primary side measured value (actual usage))

Electric power demand at fixed time (30-minute average electric power) × coefficient × multiplying factor for coefficient × unit of electric power demand

= 12345678 × 1 × 1 × 0.1kW = 1234567.8kW



© 2000 - 2023 ECHONET Consortium

(19) Number of effective digits of electric power demand

This property indicates the number of effective digits (effective digit count) for the data size of monthly maximum electric power demand, cumulative maximum electric power demand, and electric power demand at fixed time (30-minute average electric power) (4 bytes: as a digit count, 8 digits), from the lower order side within these.

(Example)

Number of effective digits for electric power demand 0x08 (8 digits from the lower order side)

Cumulative maximum electric power demand overflows at 0x5F5E0FF (99999999), and the value shall be incremented again from 0x00000000(0).

(20) Unit of electric power demand

This property indicates units of monthly maximum electric power demand, and electric power demand at fixed time (30-minute average electric power).

Property values: Unit of measured electric power demand (multiple)

0x00: 1 kW

0x01: 0.1 kW

0x02: 0.01 kW

0x03: 0.001 kW

0x04: 0.0001 kW

0x0A: 10 kW

0x0B: 100 kW

0x0C: 1000 kW

0x0D: 10000 kW

0x0E: 100000 kWh

(21) Historical data of measured electric power demand (normal direction)

This property indicates the day for which the historical data of measured cumulative amounts of electric energy is to be retrieved (EPC=0xE1) in 2 bytes as 0x0000-0x0063 (0-99), and meter readings of the electric power demand at fixed time (30-minute average electric power energy) (normal and reverse directions) at every 30 minutes at 00 and 30 minutes of the day, equaling 48 pieces for 24 hours (00:00-23:30), as the historical data by time series from the highest-order byte.

Electric power demand is indicated using a maximum of 8 digits in decimal notation, with units indicated by property values of the unit of electric power demand (EPC=0xC5). Also, measurements



© 2000 - 2023 ECHONET Consortium

are multiplied by the coefficient (EPC=0xD3) and multiplying factor for the coefficient (EPC=0xD4) to produce the value actually used.

The property value range is 0x00000000-0x05F5E0FF (0-99,999,999). The value shall be set to 0xFFFFFFFE (no measured data) in the case of no electric power demand at the time in question.

In the case of default values with no day for which the historical data of cumulative amounts of electric energy is to be retrieved (EPC=0xE1) has been set, the day for which the historical data of cumulative amounts of electric energy is to be retrieved shall be set to 0x00FF and electric power demand every 30 minutes at fixed time (30-minute average electric power) shall be set to 0xFFFFFFFE.

(22) Historical data of measured electric power demand (reverse direction)

This property indicates the day of historical data retrieval 0x0000 to 0x0063 (0 to 99), specified by day for which the historical data of measured cumulative amounts of electric energy is to be retrieved (EPC=0xE1) (Day for which the historical data of measured cumulative amounts of electric energy is to be retrieved 1 (EPC=0xE1) indicated in 2 bytes), and meter readings for scheduled electric power demand (30-minute average electric power) (reverse direction) every 30 minutes at 00 and 30 minutes every hour for 24 hours (00:00 to 23:30) of the day, equaling 48 pieces of historical data, representing property values by time series from the highest-order byte.

Electric power demand is indicated using a maximum of 8 digits in decimal notation, with units indicated by property values of the unit of electric power demand (EPC=0xC5). Also, measurements are multiplied by the coefficient (EPC=0xD3) and multiplying factor for the coefficient (EPC=0xD4) to produce the value actually used.

The property value range is 0x00000000-0x05F5E0FF (0-99,999,999). The value shall be set to 0xFFFFFFFE (no measured data) in the case of no electric power demand at the time in question.

In the case of default values with no day for which the historical data of cumulative amounts of electric energy is to be retrieved (EPC=0xE1) has been set, the day for which the historical data of cumulative amounts of electric energy is to be retrieved shall be set to 0x00FF and electric power demand every 30 minutes at fixed time (30-minute average electric power) shall be set to 0xFFFFFFFE.

(23) Unit of cumulative maximum electric power demand

This property indicates the unit of cumulative maximum electric power demand.

Property values: Unit of measured electric power demand (multiple)

0x00: 1kW

0x01: 0.1kW

0x02: 0.01kW

0x03: 0.001kW

0x04: 0.0001kW



© 2000 - 2023 ECHONET Consortium

0x0A: 10kW

0x0B: 100kW

0x0C: 1000kW

0x0D: 10000kW

0x0E: 100000kWh

(24) Measurement data of cumulative amount of reactive electric energy (lag) for power factor measurement (normal and reverse directions)

This property indicates meter readings for the data of cumulative amount of reactive electric energy (lag) for power factor measurement, in the order of measurement date in 4 bytes, measurement time in 3 bytes, cumulative amount of reactive electric energy in 4 bytes (normal direction), and cumulative amount of reactive electric energy in 4 bytes (reverse direction). The measurement date is indicated using 2 bytes for the year, 1 byte for the month, and 1 byte for the day. The measurement time is indicated using 1 byte for hours, 1 byte for minutes, and 1 byte for seconds. If the meter does not have information on seconds as a unit of measured time, 0x00 is set for seconds. The cumulative amount of reactive electric energy is indicated using a maximum of 8 digits in decimal notation, with units indicated by the property values of unit of measurement data of cumulative amount of reactive electric energy (lag) for power factor (EPC=0xCD). Also, measurements are multiplied by the coefficient (EPC=0xD3) and multiplying factor for coefficient (EPC=0xD4) to produce the value actually used.

Note "Cumulative amount of reactive electric energy (lag) for power factor measurement" is the cumulative amount of reactive electric energy (lag) in daytime (e.g., 8:00 to 22:00 in a day).

The property value range is 0x00000000-0x05F5E0FF (0-99,999,999). If the cumulative amount of reactive electric energy exceeds the number of effective digits specified by number of effective digits for cumulative amount of reactive electric energy (lag) for power factor (EPC=0xCC), the value shall be incremented again from 0x00000000(0). The value shall be set to 0xFFFFFFFE (no measured data) in the case of no cumulative amount of reactive electric energy (lag) for power factor.

(Example)

Measurement data of cumulative amount of reactive electric energy (lag) for power factor measurement = 0x00BC614E (12345678)

Coefficient (EPC=0xD3): 0x00000001 (1)

Multiplying factor for coefficient (EPC=0xD4): 0x00 (1)

Unit of measurement data of cumulative amount of reactive electric energy (lag) for power factor



© 2000 - 2023 ECHONET Consortium

(EPC=0xCD): 0x01 (0.1 kvarh)

In this case, measurements of the primary side (actual usage) will be:

Measurement data of cumulative amount of reactive electric energy (lag) for power factor × coefficient × multiplying factor for coefficient × unit of measurement data for cumulative amount of reactive electric energy (lag) for power factor measurement

= 12345678 × 1 × 1 × 0.1 kvarh = 1234567.8 kvarh

(25) Measurement data of cumulative amount of reactive electric energy (lag) at fixed time for power factor measurement (normal and reverse directions)

This property indicates cumulative amount of reactive electric energy (lag) for power factor at the most recent scheduled measurement time retained by the meter, out of the meter readings for the data of cumulative amount of reactive electric energy (lag) for power factor every 30 minutes at 00 and 30 minutes, in the order of measurement date in 4 bytes, measurement time in 3 bytes, cumulative amount of reactive electric energy in 4 bytes (normal direction), and cumulative amount of reactive electric energy in 4 bytes (reverse direction). The measurement date is indicated using 2 bytes for the year, 1 byte for the month, and 1 byte for the day. The measurement time is indicated using 1 byte for hours, 1 byte for minutes, and 1 byte for seconds. If the meter does not have information on seconds as a unit of measured time, 0x00 is set for seconds. The cumulative amount of reactive electric energy is indicated using a maximum of 8 digits in decimal notation, with units indicated by the property values of unit of measurement data of cumulative amount of reactive electric energy (lag) for power factor (EPC=0xCD). Also, measurements are multiplied by the coefficient (EPC=0xD3) and multiplying factor for the coefficient (EPC=0xD4) to produce the value actually used.

The property value range is 0x00000000-0x05F5E0FF (0-99,999,999). If the cumulative amount of reactive electric energy exceeds the number of effective digits specified by number of effective digits for cumulative amount of reactive electric energy (lag) for power factor (EPC=0xCC), the value shall be incremented again from 0x00000000(0). The value shall be set to 0xFFFFFFFE (no measured data) in the case of no cumulative amount of reactive electric energy (lag) for power factor.

(Example)

Measurement data of cumulative amount of reactive electric energy (lag) at fixed time for power factor

- YYYY = 0x07E7 (2023), MM = 0x04 (April), DD = 0x01 (day 1)
- hh = 0x0A (hour:10), mm = 0x1E (minute:30), ss = 0x00 (second:00)
- Cumulative amount of reactive electric energy (lag) = 0x00BC614E (12345678)

Coefficient (EPC=0xD3): 0x00000001 (1)

Multiplying factor for coefficient (EPC=0xD4): 0x00 (1)

Unit of measurement data of cumulative amount of reactive electric energy (lag) for power factor



© 2000 - 2023 ECHONET Consortium

(EPC=0xCD): 0x01 (0.1 kWh)

In this case,

Measurement date April 1, 2023

Measurement time 10:30:00

Cumulative amount of reactive electric energy (lag) (primary side measured value (actual usage))

Measurement data of cumulative amount of reactive electric energy (lag) at fixed time for power factor × coefficient× multiplying factor for coefficient × unit of measurement data of cumulative amount of reactive electric energy (lag) for power factor

= 12345678 × 1 × 1 × 0.1 kvarh = 1234567.8 kvarh

(26) Number of effective digits for cumulative amount of reactive electric energy

This property indicates the number of effective digits (effective digit count) for the data size of measurement data of cumulative amount of reactive electric energy (lag) for power factor (4 bytes: as a digit count, 8 digits) from the lower order side within these., The same way for the cumulative amount of reactive electric energy (lag, lead) .

(Example)

Number of effective digits for cumulative amount of reactive electric energy (lag) for power factor 0x08 (8 digits from the lower order side)

Cumulative amount of reactive electric energy (lag) for power factor overflows at 0x5F5E0FF(99999999), and the value shall be incremented again from 0x00000000(0).

(27) Unit for cumulative amounts of reactive electric energy

This property indicates the unit of measurement data for the cumulative amount of reactive electric energy (lag) for the power factor; similar units for cumulative amount of reactive electric energy (lag, lead) should be used.

Property values: Unit of measurement data of cumulative amount of reactive electric energy (lag) for power factor (multiply)

0x01: 0.1 kvarh

0x02: 0.01 kvarh

0x03: 0.001 kvarh

0x04: 0.0001 kvarh

0x0A: 10 kvarh

0x0B: 100 kvarh

0x0C: 1000 kvarh



© 2000 - 2023 ECHONET Consortium

0x0D: 10000 kvarh

0x0E: 100000 kvarh

(28) Historical data of measurement data of cumulative amount of reactive electric energy (lag) for power factor measurement (normal direction)

This property indicates meter readings the day for which the historical data of cumulative amounts of electric energy is to be retrieved 0x0000-0x0063 (0-99) specified by the day for which the historical data of cumulative amounts of electric energy is to be retrieved (EPC=0xE1) (day for which the historical data of cumulative amounts of electric energy is to be retrieved (EPC=0xE1) indicated in 2 bytes) and meter readings for the measured data (normal direction) for cumulative amount of reactive electric energy (lag) every 30 minutes at 00 and 30 minutes every hour, for 24 hours (00:00 to 23:30) of the day, equaling 48 pieces of historical data, representing property values by time series from the highest-order byte.

The cumulative amount of reactive electric energy (lag) is indicated using a maximum of 8 digits in decimal notation. Units are indicated by the property values of the unit of cumulative amount of reactive electric energy (lag) (EPC=0xCD). Also, measurements are multiplied by the coefficient (EPC=0xD3) and multiplying factor for coefficient (EPC=0xD4) to produce the value actually used.

The property value range is from 0x00000000 to 0x05F5E0FF (0-99,999,999).If the cumulative amount of reactive electric energy exceeds the number of effective digits specified by number of effective digits for cumulative amount of reactive electric energy (lag) (EPC=0xCC), the value shall be incremented again from 0x00000000(0). The value shall be set to 0xFFFFFFFE (no measured data) in the case of no cumulative amount of reactive electric energy (lag) at the time in question.

In the case of default values with no day for which the historical data of cumulative amounts of electric energy is to be retrieved (EPC=0xE1) has been set, the day for which the historical data of cumulative amounts of electric energy is to be retrieved shall be set to 0x00FF and cumulative amount of reactive electric energy (lag) every 30 minutes shall be set to 0xFFFFFFFE.

(29) Historical data of measurement data of cumulative amount of reactive electric energy (lag) for power factor measurement (reverse direction)

This property indicates the day for which historical data of cumulative amounts of electric energy is to be retrieved 0x0000-0x0063 (0-99) specified by day for which historical data of cumulative amounts of electric energy is to be retrieved (EPC=0xE1) (day for which the historical data of cumulative amounts of electric energy is to be retrieved (EPC=0xE1) indicated in 2 bytes) and meter readings for the measured data (reverse direction) for cumulative amount of reactive electric energy (lag) every 30 minutes at 00 and 30 minutes every hour, for 24 hours (00:00 to 23:30) of the day, equaling 48 pieces



© 2000 - 2023 ECHONET Consortium

of historical data, representing property values by time series from the highest-order byte.
The cumulative amount of reactive electric energy (lag) is indicated using a maximum of 8 digits in decimal notation. Units are indicated by the property values of the unit of cumulative amount of reactive electric energy (lag) (EPC=0xCD). Also, measurements are multiplied by the coefficient (EPC=0xD3) and multiplying factor for coefficient (EPC=0xD4) to produce the value actually used..
The property value range is from 0x00000000 to 0x05F5E0FF (0-99,999,999). If the cumulative amount of reactive electric energy exceeds the number of effective digits specified by number of effective digits for cumulative amount of reactive electric energy (lag) (EPC=0xCC), the value shall be incremented again from 0x00000000(0). The value shall be set to 0xFFFFFFFE (no measured data) in the case of no cumulative amount of reactive electric energy (lag) at the time in question.
In the case of default values with no day for which the historical data of cumulative amounts of electric energy is to be retrieved (EPC=0xE1) has been set, the day for which the historical data of cumulative amounts of electric energy is to be retrieved shall be set to 0x00FF and cumulative amount of reactive electric energy (lag) every 30 minutes shall be set to 0xFFFFFFFE.

(30) Present values of measured cumulative amount of reactive electric energy (lag) (normal and reverse directions)
This property indicates meter readings for the data of reactive electric energy (lag), in the order of measurement date in 4 bytes, measurement time in 3 bytes, cumulative amount of reactive electric energy in 4 bytes (normal direction), and cumulative amount of reactive electric energy in 4 bytes (reverse direction). The measurement date is indicated using 2 bytes for the year, 1 byte for the month, and 1 byte for the day. The measurement time is indicated using 1 byte for hours, 1 byte for minutes, and 1 byte for seconds. If the meter does not have information on seconds as a unit of measured time, 0x00 is set for seconds. The cumulative amount of reactive electric energy is indicated using a maximum of 8 digits in decimal notation, with units indicated by the property values of unit for cumulative amounts of reactive electric energy (EPC=0xCD). Also, measurements are multiplied by the coefficient (EPC=0xD3) and multiplying factor for coefficient (EPC=0xD4) to produce the value actually used..
The property value range is 0x00000000-0x05F5E0FF (0-99,999,999). If the cumulative amount of reactive electric energy exceeds the number of effective digits specified by number of effective digits for cumulative amount of reactive electric energy (EPC=0xCC), the value shall be incremented again from 0x00000000(0). The value shall be set to 0xFFFFFFFE (no measured data) in the case of no cumulative amount of reactive electric energy (lag).
(Example)
Measurement data of cumulative amount of reactive electric energy (lag) = 0x00BC614E (12345678)



© 2000 - 2023 ECHONET Consortium

Coefficient (EPC=0xD3): 0x00000001 (1)

Multiplying factor for coefficient (EPC=0xD4): 0x00 (1)

Unit of measurement data of cumulative amount of reactive electric energy (lag): (EPC=0xCD): 0x01 (0.1 kvarh)

In this case, measurements of the primary side (actual usage) will be:

Measurement data of cumulative amount of reactive electric (lag) × coefficient × multiplying factor for coefficient × unit for cumulative amounts of reactive electric energy

= 12345678 × 1 × 1 × 0.1 kvarh = 1234567.8 kvarh

(31) Present values of measured cumulative amount of reactive electric energy (lead) (normal and reverse directions)

This property indicates meter readings for the data of reactive electric energy (lead), in the order of measurement date in 4 bytes, measurement time in 3 bytes, cumulative amount of reactive electric energy in 4 bytes (normal direction), and cumulative amount of reactive electric energy in 4 bytes (reverse direction). The measurement date is indicated using 2 bytes for the year, 1 byte for the month, and 1 byte for the day. The measurement time is indicated using 1 byte for hours, 1 byte for minutes, and 1 byte for seconds. If the meter does not have information on seconds as a unit of measured time, 0x00 is set for seconds. The cumulative amount of reactive electric energy is indicated using a maximum of 8 digits in decimal notation, with units indicated by the property values of unit for cumulative amounts of reactive electric energy (EPC=0xCD). Also, measurements are multiplied by the coefficient (EPC=0xD3) and multiplying factor for coefficient (EPC=0xD4) to produce the value actually used.

The property value range is 0x00000000-0x05F5E0FF (0-99,999,999). If the cumulative amount of reactive electric energy exceeds the number of effective digits specified by number of effective digits for cumulative amount of reactive electric energy (EPC=0xCC), the value shall be incremented again from 0x00000000(0). The value shall be set to 0xFFFFFFFE (no measured data) in the case of no cumulative amount of reactive electric energy (lead).

(Example)

Measured cumulative amount of reactive electric energy (lead) = 0x00BC614E (12345678)

Coefficient (EPC=0xD3): 0x00000001 (1)

Multiplying factor for coefficient (EPC=0xD4): 0x00 (1)

Unit for cumulative amounts of reactive electric energy (EPC=0xCD): 0x01 (0.1 kvarh)

In this case, measurements of the primary side (actual usage) will be:

Measured cumulative amount of reactive electric energy (lead) × coefficient × multiplying factor for coefficient × unit for cumulative amounts of reactive electric energy

= 12345678 × 1 × 1 × 0.1 kvarh = 1234567.8 kvarh



© 2000 - 2023 ECHONET Consortium

(32) Measured instantaneous electric energy

This property indicates the measured effective instantaneous amount of electric power in watts. The value range is from 0x80000001 to 0x7FFFFFFD (from -2147483647 to 2147483645).

Range: -2,147,483,647-2,147,483,645W (unit of measurement: W)

*Underflow : 0x80000000

Overflow : 0x7FFFFFFF

No measured data : 0x7FFFFFFE

(33) Measured instantaneous currents 2

This property indicates the value of effective instantaneous R and T phase currents in amperes. The value range is from 0x80000001 to 0x7FFFFFFD

(from 214748364.7 to 214748364.5). In the case of a single-phase, two-wire system, measured data shall be stored in the R phase field and 0x7FFFFFFE (no measured data) shall be set in the T phase field.

Range: from 214748364.7 to 214748364.5A (unit of measurement: 0.1A)

Example: three-phase, three-wire system: 0x000003E9 0x000003E7 → 100.1,099.9 (A)

Example: single-phase, two-wire system: 0xFFFFFC19 0x7FFFFFFE → -99.9 not measured (A)

*Underflow : 0x80000000

Overflow : 0x7FFFFFFF

No measured data : 0x7FFFFFFE

(34) Historical data of measured cumulative amounts of active electric energy 2 (normal and reverse directions)

This property indicates the data YYYY:MM:DD:hh:mm set to day for which the historical data of measured cumulative amounts of electric energy is to be retrieved 2 (EPC=0xEF), the number of collection segments, and the measurement data of cumulative amount of active electric energy (normal and reverse directions) of the date and time, as the historical data of 1-minute interval measurements, up to a max. 10-minute data.

Cumulative historical data retrieval day and time shall be indicated in the sequence of date (4 bytes) and time (2 bytes), and minutes in the time shall be indicated from 0x00 (0 minute) to 0x3B (59 minutes).

The number of data pieces retrieved shall be indicated as 1 byte for the individual measured cumulative amounts of electric energy retrieved every 1 minute, with a value range of 0x01-0x0A (1-10).

Measured cumulative amount of active electric energy (meter reading and not 1-minute cumulative value) is indicated as a maximum of 8 digits in decimal notation. Also, measurements are multiplied



© 2000 - 2023 ECHONET Consortium

by the coefficient (EPC=0xD3) and multiplying factor for coefficient (EPC=0xD4) to produce the value actually used. The property value range is from 0x00000000 to 0x05F5E0FF (0-99999999). With the measured cumulative amount of active electric energy at the time set by date and time for which the historical data is to be retrieved as the higher-order byte, the property value indicates the number of segments specified by day for which the historical data of measured cumulative amounts of electric energy is to be retrieved 2 (EPC=0xEF) in reverse time series. If the cumulative amount of active electric energy exceeds the number of effective digits specified by number of effective digits for cumulative amounts of active electric energy (EPC=0xE5), the value shall be incremented again from 0x00000000(0). If there are no measured cumulative amounts of active electric energy or the time data are outside the historical data retention period, it shall be taken as no data and the value shall be 0xFFFFFFFE.

In the case of default values with no day for which the historical data of cumulative amounts of electric energy is to be retrieved 2 (EPC=0xEF) has been set, 0xFFFFFFFFFFFF shall be set for the cumulative historical data retrieval day and time and 0x01 for the number of data pieces retrieved, and 0xFFFFFFFE shall be set for the 1-minute value for 1 data piece.

(35) Historical data of measurement data of cumulative amount of reactive electric energy (lag) for power factor measurement 2 (normal and reverse directions)

This property indicates the date and time, YYYY:MM:DD:hh:mm, set to day for which the historical data of measured cumulative amounts of electric energy is to be retrieved 2 (EPC=0xEF), the number of collection segments, and the measurement data of cumulative amount of reactive electric energy (lag) for power factor (normal and reverse directions) of the date and time, as the historical data of 1-minute interval measurements, up to a max. 10-minute data.

Cumulative historical data retrieval day and time shall be indicated in the sequence of date (4 bytes) and time (2 bytes), and minutes in the time shall be indicated from 0x00 (0 minute) to 0x3B (59 minutes).

The number of data pieces retrieved shall be indicated as 1 byte for the individual measured cumulative amounts of reactive electric energy (lag) for power factor retrieved every 1 minutes, with a value range of 0x01-0x0A (1-10).

Measured cumulative amount of reactive electric energy (lag) for power factor (meter reading and not 1-minute cumulative value) is indicated as a maximum of 8 digits in decimal notation. Also, measurements are multiplied by the coefficient (EPC=0xD3) and multiplying factor for coefficient (EPC=0xD4) to produce the electric energy amount.. The property value range is from 0x00000000 to 0x05F5E0FF (0-99999999). With the measured cumulative amount of reactive electric energy (lag) for power factor at the time set by date and time for which the historical data is to be retrieved as the higher-order byte, the property value indicates the number of segments specified by day for which the



© 2000 - 2023 ECHONET Consortium

historical data of measured cumulative amounts of electric energy is to be retrieved 2 (EPC=0xEF) in reverse time series. If the measured cumulative amount of reactive electric energy (lag) for power factor exceeds the number of effective digits specified by number of effective digits for the unit of cumulative amounts of reactive electric energy (lag) for power factor (EPC=0xCD), the value shall be incremented again from 0x00000000(0). If there are no measured cumulative amounts of reactive electric energy (lag) or the time data are outside the historical data retention period, it shall be taken as no data and the value shall be 0xFFFFFFFE.

In the case of default values with no day for which the historical data of cumulative amounts of electric energy is to be retrieved 2 (EPC=0xEF) has been set, 0xFFFFFFFFFFFF shall be set for the cumulative historical data retrieval day and time and 0x01 for the number of data pieces retrieved, and 0xFFFFFFFE shall be set for the 1-minute value for 1 data piece.

(36) Day for which the historical data of measured cumulative amounts of electric energy is to be retrieved 2

This property indicates the date and time for which the historical data of measured cumulative amounts of active electric energy 2 (normal and reverse directions) (EPC=0xED) and the historical data of measurement data of cumulative amount of reactive electric energy (lag) for power factor 2 (normal and reverse directions) (EPC=0xEE) are to be retrieved, and the number of collection segments where 1-minute measurement historical data is one segment.

The date and time shall be the latest ones of data collection. The format is two bytes for year, one byte for month, one byte for day, one byte for hour, and one byte for minute. Since the historical data of measured cumulative amounts of active electric energy 2 (normal and reverse directions) (EPC=0xED) and the historical data of measurement data of cumulative amount of reactive electric energy (lag) for power factor 2 (normal and reverse directions) (EPC=0xEE) are data collected every 1 minute, the minutes value shall be 0x00 (0 minute) to 0x3B (59 minutes).

The number of collection segments indicates the count of collecting data about measured cumulative amount of electric energy every 1 minute earlier than the date and time for which the historical data is to be retrieved. The property value range is from 0x01 to 0x0A (1 to 10).

The initial value of this property shall be set to 0xFFFFFFFFFFFF for date and time for which the historical data is to be retrieved and 0x01 for the number of collection segments.



© 2000 - 2023 ECHONET Consortium

**Table 3-4 "Conditionally Required Property" Symbols and Corresponding Application Services**

| Application services name | Examples of services | Symbol |
|---|---|---|
| Mobile services | ・ Remote monitoring of the operation statuses of devices intended for indoor use<br>・ Remote control and remote locking of devices intended for indoor use<br>・ Remote monitoring of visitors and day-to-day activities of senior citizens | M |
| Energy services | ・ Monitoring of electricity consumptions and electricity bills<br>・ Coordinated power-saving operation of air conditioners, exhaust fans, lighting apparatuses and window shades<br>・ Contract-based electricity demand control | E |
| Home amenity services | ・ Centralized control of window shades, exhaust fans and lighting apparatuses<br>・ Scheduled operation of devices intended for indoor use (preheating, precooling) | Hm |
| Home health-care services | ・ Health management services (hospitals, health adviser companies)<br>・ Life care services for senior citizens<br>・ Monitoring and control of home medical care equipment | Hh |
| Security services | ・ Fire prevention (monitoring to detect fires, gas leaks and electricity leaks)<br>・ Disaster prevention (detection of water leaks, measures to respond to earthquakes, prevention of freezing)<br>・ Crime prevention (visitor control, prevention of trespassing) | S |
| Remote appliance maintenance services | ・ Remote maintenance of devices intended for indoor use and remote diagnosis of such devices to detect failures<br>・ Remote consulting for the operation of devices intended for indoor use | R |

This version of Appendix introduces the concept of "manufacturer-specific codes," so that manufacturer-specific functions can be covered. Manufacturer-specific code values can only be assigned in relation to the codes specified as manufacturer-specific codes in the "Contents of property" column. Manufacturer-specific codes are codes that are outside the scope of the ECHONET Specification. Manufacturer-specific code values shall be defined by individual manufacturers, and the addition and deletion of and alterations to manufacturer-specific code values shall be done by individual manufacturers at their discretion. Whether to publish the assigned manufacturer-specific code values shall be determined by individual manufacturers.



© 2000 - 2023 ECHONET Consortium

## 3. 3. 43 Requirements for the frequency regulation class

Class group code : 0x02

Class code : 0xA7

Instance code : 0x01–0x7F (0x00: All-instance specification code)

| Property name | EPC | Contents of property<br>Value range | Data type | Data size | Unit | Access rule | Mandatory | Announcement at status change | Remark |
|---|---|---|---|---|---|---|---|---|---|
| Operation status | 0x80 | This property indicates the ON/OFF status. | unsigned char | 1 Byte | - | Set | | ○ | |
| | | ON=0x30, OFF=0x31 | | | | Get | ○ | | |
| Product code | 0x8C | Identifies the product using ASCII code. | unsigned char×12 | 12 Bytes | - | Get | ○ | | |
| | | (Defined by each manufacturer.) | | | | | | | |
| Production number | 0x8D | This property indicates the production number using ASCII code. | unsigned char x 12 | 12 Bytes | - | Get | ○ | | |
| | | (Defined by each manufacturer.) | | | | | | | |
| Control point | 0xC0 | This property indicates the power control point for frequency regulation. | unsigned char | 1 Byte | - | Set | | | |
| | | Device point=0x30, Power receiving point=0x31 | | | | Get | ○ | | |
| Frequency regulation parameter setting | 0xC1 | This property indicates the frequency regulation mode and no-communication watchdog timer. | unsigned short x 2 | 4 Bytes | - | Set/ Get | ○ *1 | | |
| | | 1st to 2nd bytes: Bitmap representing frequency regulation mode.<br>Bit 0: Command control<br>Bit 1: Autonomous control<br>Bit 8: EM planned value control<br>Bit 9: EM target value control<br>1 if the control is valid, 0 if it is invalid..<br>3rd to 4th bytes: No-communication watchdog timer. (10msec)<br>0x0000 to 0xFFFF (0 to 65,535) | | | | | | | |



© 2000 - 2023 ECHONET Consortium

| | | | | | | | | | |
|---|---|---|---|---|---|---|---|---|---|
| EM target power value | 0xC2 | This property indicates the reference power of EM target value control at control point.<br>For normal direction:<br>0x00000000 to 0x3B9AC9FF<br>(0 to 999,999,999)<br>For reverse direction:<br>0xC4653601 to 0xFFFFFFFF<br>(-999,999,999 to -1) | signed long | 4 Bytes | W | Set/ Get | ○ | | |
| Command control parameter setting | 0xC3 | This property indicates the command control parameter at control point.<br>1st to 4th bytes: Command control instruction number.<br>0x00000000 to 0x3B9AC9FF<br>(0 to 999,999,999)<br>5th to 8th bytes: Power value for the instruction. (W)<br>For normal direction:<br>0x00000000 to 0x3B9AC9FF<br>(0 to 999,999,999)<br>For reverse direction:<br>0xC4653601 to 0xFFFFFFFF<br>(-999,999,999 to -1) | unsigned long + signed long | 8 Bytes | - | Set/ Get | ○ *2 | | |
| Autonomous control parameter setting 1 | 0xC4 | This property indicates the autonomous control parameter 1 at control point.<br>1st to 2nd bytes: Width of dead band. (Plus side) (mHz)<br>0x0000 to 0x03E8 (0 to 1,000)<br>3rd to 4th bytes: Width of dead band. (Minus side) (mHz)<br>0x0000 to 0x03E8 (0 to 1,000)<br>5th to 8th bytes: Rate of power control. (Normal direction) (W/mHz)<br>0x00000000to 0x3B9AC9FF<br>(0 to 999,999,999)<br>9th to 12th bytes: Rate of power control. (Reverse direction) (W/mHz)<br>0x00000000 to 0x3B9AC9FF<br>(0 to 999,999,999)<br>13th to 16th bytes: Power upper limit for autonomous control. (Normal direction) (W)<br>0x00000000 to 0x3B9AC9FF<br>(0 to 999,999,999)<br>17th to 20th bytes: Power upper limit for autonomous control. (Reverse direction) (W)<br>0x00000000 to 0x3B9AC9FF<br>(0 to 999,999,999)<br>21st–22nd bytes: Abnormal frequency deviation threshold (mHz)<br>0x0000 to 0x03EB（0 to 1,000） | signed short x 2 + unsigned long x 2 + signed long x 2 + unsigned short | 22 Bytes | - | Set/ Get | ○ *3 | | |



© 2000 - 2023 ECHONET Consortium

| | | | | | | | | | |
|---|---|---|---|---|---|---|---|---|---|
| Autonomous control parameter setting 2 | 0xC5 | This property indicates the autonomous control parameter 2 at control point.<br>1st to 2nd bytes: Time constant for filter. (LPF)<br>0x0000to 0xFFFF (0 to 65,535)<br>3rd to 4th bytes: Time constant for filter. (HPF)<br>0x0000to 0xFFFF (0 to 65,535)<br>5th to 6th bytes: PI control coefficient. (Proportional gain)<br>0x0000to 0xFFFF (0 to 65,535)<br>7th to 8th bytes: PI control coefficient. (Integral gain)<br>0x0000 to 0xFFFF (0 to 65,535)<br>9th to 12th bytes: Rate limiter. (Normal direction) (W/sec)<br>0x00000000 to 0x3B9AC9FF<br>(0 to 999,999,999)<br>13th to 16th bytes: Rate limiter. (Reverse direction) (W/sec)<br>0x00000000 to 0x3B9AC9FF<br>(0 to 999,999,999) | unsigned short x 4 + unsigned long x 2 | 16 Bytes | - | Set/ Get | | | |
| Autonomous control parameter setting 3 | 0xC6 | This property indicates the autonomous control parameter 3 at control point.<br>5 pairs of autonomous control power before correction and after correction.<br>Values for normal direction.<br>0x00000000 to 0x3B9AC9FF<br>(0 to 999,999,999),<br>Values for reverse direction.<br>0xC4653601 to 0xFFFFFFFF<br>(-999,999,999 to -1) | signed long x 10 | 40 Bytes | W | Set/ Get | | | |
| Correction value for reference frequency | 0xC7 | This property indicates the correction value for reference frequency.<br>0xFF9C to 0xFFFF (-100 to -1) or 0x0000 to 0x0064 (0 to 100) | signed short | 2 Bytes | mHz | Set/ Get | | | |
| Transmittable /receivable cycle | 0xD0 | This property indicates the transmittable /receivable cycle (10msec)<br>0x0000 to 0xFFFF (0 to 65,535) | unsigned short | 2 Bytes | 10 ms | Get | ○ | | |
| Device type | 0xD1 | This property indicates the class group code and the class code of device for frequency regulation.<br>1st byte: Class group code<br>(0x00 to 0xFF)<br>2nd byte: Class code<br>(0x00 to 0xFF)<br>3rd byte: Instance code<br>(0x01 to 0x7F) | unsigned char | 3 Bytes | - | Get | ○ | | |



© 2000 - 2023 ECHONET Consortium

| | | | | | | | | | |
|---|---|---|---|---|---|---|---|---|---|
| Values of AC max power | 0xD2 | This property indicates the values of device maximum power at device point.<br>1st to 4th bytes: Maximum input power.<br>0x00000000 to 0x3B9AC9FF<br>(0 to 999,999,999)<br>5th to 8th bytes: Maximum output power.<br>0x00000000 to 0x3B9AC9FF<br>(0 to 999,999,999) | unsigned long x 2 | 8 Bytes | W | Get | ○ | | |
| Value of contract power | 0xD3 | This property indicates the value of contract power at power receiving point.<br>0x000000000 to 0x3B9AC9FF<br>(0 to 999,999,999) | unsigned long | 4 Bytes | W | Get | | | |
| Device control performance | 0xD4 | This property indicates the device control performance parameters at device point.<br>1st and 2nd bytes: Upper limit of dead band width. (mHz)<br>0x0000 to 0x03E8 (0 to 1,000)<br>3rd and 4th bytes: Lower limit of dead band width. (mHz)<br>0x0000 to 0x03E8 (0 to 1,000)<br>5th to 8th bytes: Upper limit of power change rate. (W/mHz)<br>0x00000000 to 0x3B9AC9FF<br>(0 to 999,999,999)<br>9th to 12th bytes: Lower limit of power change rate. (W/mHz)<br>0x00000000 to 0x3B9AC9FF<br>(0 to 999,999,999)<br>13th to 16th bytes: Upper limit of power change speed. (W/sec)<br>0x00000000 to 0x3B9AC9FF<br>(0 to 999,999,999)<br>17th to 20th bytes: Lower limit of power change speed. (W/sec)<br>0x00000000 to 0x3B9AC9FF<br>(0 to 999,999,999) | unsigned short x 2 + unsigned long x 4 | 20 Bytes | - | Get | ○<br>*3 | | |



© 2000 - 2023 ECHONET Consortium

| | | | | | | | | | |
|---|---|---|---|---|---|---|---|---|---|
| Information of frequency regulation | 0xD5 | This property indicates the presence or absence of frequency regulation service function and current frequency regulation status.<br>1st and 2nd bytes: Bitmap representing whether participation in the frequency regulation service is possible.<br>Bit 0: Command control<br>Bit 1: Autonomous control<br>Bit 8: EM planned value control<br>Bit 9: EM target value control<br>1 indicates that participation is possible, and 0 indicates non-participation.<br>3rd and 4th bytes: Bitmap representing frequency regulation state.<br>Bit 0: Command control<br>Bit 1: Autonomous control<br>Bit 8: EM planned value control<br>Bit 9: EM target value control<br>Bit 15: Out of control<br>1 when each control operation is performed, 0 when not performed. | unsigned short x 2 | 4 Bytes | - | Get | ○ *1 | ○ | |
| Detailed information of whether the device can continue to control | 0xD6 | This property indicates the detailed information of whether the device can continue to control.<br>The upper byte indicates whether control can be continued or not.<br>The lower byte indicates detailed information on control restrictions and continuation impossibility~~.~~ (~~R~~refer to the detailed ~~information~~explanation)~~ of "whether the device can continue to control property".~~ | unsigned char x 2 | 2 Bytes | - | Get | ○ | | |



© 2000 - 2023 ECHONET Consortium

| | | | | | | | | | |
|---|---|---|---|---|---|---|---|---|---|
| Information of EM | 0xD7 | This property indicates the EM service status and peak cut threshold.<br>1st and 2nd bytes: Charge start time in the HH:MM format.<br>0x00 to 0x17: 0x00 to 0x3B<br>(0 to 23) :(0 to 59)<br>For invalid:0xFFFF<br>3rd and 4th bytes: Charge end time in the HH:MM format.<br>0x00 to 0x17: 0x00 to 0x3B<br>(0 to 23) :(0 to 59),<br>For invalid:0xFFFF<br>5th and 6th bytes: Discharge start time in the HH:MM format.<br>0x00 to 0x17: 0x00 to 0x3B<br>(0 to 23) :(0 to 59)<br>For invalid:0xFFFF<br>7th and 8th bytes: Discharge end time in the HH:MM format.<br>0x00 to 0x17: 0x00 to 0x3B<br>(0 to 23) :(0 to 59)<br>For invalid:0xFFFF<br>9th byte: SOC of discharge lower limit. (%)<br>0x00 to 0x64 (0 to 100)<br>10th bytes: SOC of charge upper limit. (%)<br>0x00 to 0x64 (0 to 100)<br>11th to 14th bytes: Peak cut power threshold. (W)<br>0x00000000 to 0x3B9AC9FF<br>(0 to 999,999,999)<br>For invalid:0xFFFF<br>15th to 18th bytes: Peak cut electric energy threshold. (Wh)<br>0x00000000 to 0x3B9AC9FF<br>(0 to 999,999,999)<br>For invalid:0xFFFFFFFF<br>19th byte: Existence of PV surplus charging.<br>With=0x41, Without=0x42<br>20th byte: Existence of PV reverse power flow.<br>With=0x41, Without=0x42<br>21st byte: Existence of PCS push-up effect.<br>With=0x41, Without=0x42 | unsigned char x 10 + Unsigned long x 2 + unsigned char x 3 | 21 Bytes | - | Get | ○ | | |



© 2000 - 2023 ECHONET Consortium

| | | | | | | | | | |
|---|---|---|---|---|---|---|---|---|---|
| Measured instantaneous values of PCS | 0xD8 | This property indicates the measured instantaneous values of PCS.<br>1st and 2nd bytes: Frequency measurement value. (mHz)<br>0x0000 to 0xFFFD (0 to 65,533),<br>For invalid:0xFFFF<br>3rd to 6th bytes: Instantaneous power measurement value at device point. (W)<br>For normal direction:<br>0x00000000 to 0x3B9AC9FF<br>(0 to 999,999,999)<br>For reverse direction:<br>0xFFFFFFFF to 0xC4653601<br>(-1 to -999,999,999)<br>7th to 10th bytes: Instantaneous power measurement value at power receiving point. (W)<br>For normal direction:<br>0x00000000 to 0x3B9AC9FF<br>(0 to 999,999,999)<br>For reverse direction:<br>0xFFFFFFFF to 0xC4653601<br>(-1 to -999,999,999)<br>For invalid:0x7FFFFFFF | unsigned short + signed long x 2 | 10 Bytes | - | Get | ○ *4 | | |



© 2000 - 2023 ECHONET Consortium

| | | | | | | | | | |
|---|---|---|---|---|---|---|---|---|---|
| Response information | 0xD9 | This property indicates the instantaneous power measurement value, each control power value and command control instruction number at control point.<br>1st to 4th bytes: Instantaneous AC power measurement. (W)<br>For normal direction:<br>0x00000000 to 0x3B9AC9FF<br>(0 to 999,999,999)<br>For reverse direction:<br>0xC4653601 to 0xFFFFFFFF<br>(-999,999,999 to -1)<br>5th to 8th bytes: Power value of EM control. (W)<br>For normal direction:<br>0x00000000 to 0x3B9AC9FF<br>(0 to 999,999,999)<br>For reverse direction:<br>0xC4653601 to 0xFFFFFFFF<br>(-999,999,999 to -1)<br>For invalid:0x7FFFFFFF<br>9th to 12th bytes: Power value of command control. (W)<br>For normal direction:<br>0x00000000 to 0x3B9AC9FF<br>(0 to 999,999,999)<br>For reverse direction:<br>0xC4653601 to 0xFFFFFFFF<br>(-999,999,999 to -1)<br>For invalid:0x7FFFFFFF<br>13th to 16th bytes: Power value of autonomous control. (W)<br>For normal direction:<br>0x00000000 to 0x3B9AC9FF<br>(0 to 999,999,999)<br>For reverse direction:<br>0xC4653601 to 0xFFFFFFFF<br>(-999,999,999 to -1)<br>For invalid:0x7FFFFFFF<br>17th to 20th bytes: Command control instruction number.<br>0x00000000 to 0x3B9AC9FF<br>(0 to 999,999,999)<br>For invalid: 0xFFFFFFFF<br>21st to 22nd bytes: Grid frequency deviation. (mHz)<br>0xF448 to 0xFFFF (-3,000 to -1),<br>0x0000 to 0x0BB8 (0 to 3,000) | signed long x 4 + unsigned long + signed short | 22 Bytes | - | Get | ○ | | *5 |



© 2000 - 2023 ECHONET Consortium

| | | | | | | | | | |
|---|---|---|---|---|---|---|---|---|---|
| Instantaneous input and output power capability value | 0xDA | This property indicates the input and output power capability values at device point.<br>1st to 4th bytes: Instantaneous input power capability value. (Normal direction) (W)<br>0x00000000 to 0x3B9AC9FF<br>(0 to 999,999,999)<br>5th to 8th bytes: Instantaneous output power capability value. (Reverse direction) (W)<br>0x00000000 to 0x3B9AC9FF<br>(0 to 999,999,999) | unsigned long x 2 | 8 Bytes | W | Get | ○ | | |
| Instantaneous chargeable and dischargeable power values | 0xDB | This property indicates the chargeable and dischargeable power value. (DC value)<br>1st to 4th bytes: Instantaneous chargeable power value. (W)<br>0x00000000 to 0x3B9AC9FF<br>(0 to 999,999,999)<br>5th to 8th bytes: Instantaneous dischargeable power value. (W)<br>0x00000000 to 0x3B9AC9FF<br>(0 to 999,999,999) | unsigned long x 2 | 8 Bytes | W | Get | - | | |
| Battery status | 0xDC | This property indicates the current battery status.<br>1st to 4th bytes: Chargeable electric energy value. (AC value) (Wh)<br>0x00000000 to 0x3B9AC9FF<br>(0 to 999,999,999)<br>5th to 8th bytes: Dischargeable electric energy value. (AC value) (Wh)<br>0x00000000 to 0x3B9AC9FF<br>(0 to 999,999,999)<br>9th to 12th bytes: Remaining stored electricity. (DC value) (Wh)<br>0x00000000 to 0x3B9AC9FF<br>(0 to 999,999,999),<br>0xFFFFFFFF: invalid<br>13th byte: Remaining stored electricity. (State of charge) (%)<br>0x00 to 0x64 (0 to 100), 0xFF: invalid<br>14th byte: State of Health. (%)<br>0x00 to 0x64 (0 to 100), 0xFF: invalid | unsigned long x 3 + unsigned char x 2 | 14 Bytes | - | Get | ○ *6 | | |



© 2000 - 2023 ECHONET Consortium

| | | | | | | | | | |
|---|---|---|---|---|---|---|---|---|---|
| Cumulative electric energy measurement values | 0xDE | This property indicates the various cumulative electric energy measurement values<br>1st to 4th bytes: Measured cumulative amount of input electric energy for PCS. (Normal direction at device point) (Wh)<br>0x00000000 to 0x3B9AC9FF<br>(0 to 999,999,999)<br>5th to 8th bytes: Measured cumulative amount of output electric energy by PCS. (Reverse direction at device point) (Wh)<br>0x00000000 to 0x3B9AC9FF<br>(0 to 999,999,999)<br>9th to 12th bytes: Measured cumulative amount of electric energy bought from grid. (Wh)<br>0x00000000 to 0x3B9AC9FF<br>(0 to 999,999,999),<br>0xFFFFFFFF: invalid<br>13th to 16th bytes: Measured cumulative amount of electric energy sold for grid. (Wh)<br>0x00000000 to 0x3B9AC9FF<br>(0 to 999,999,999),<br>0xFFFFFFFF: invalid<br>17th to 20th bytes: Measured cumulative amount of load electric energy. (Wh)<br>0x00000000 to 0x3B9AC9FF<br>(0 to 999,999,999),<br>0xFFFFFFFF: invalid<br>21st to 24th bytes: Measured cumulative amount of electric energy by PV. (DC value) (Wh)<br>0x00000000 to 0x3B9AC9FF<br>(0 to 999,999,999),<br>0xFFFFFFFF: invalid<br>26th to 28th bytes: Measured cumulative amount of charge electric energy to battery. (DC value) (Wh)<br>0x00000000 to 0x3B9AC9FF<br>(0 to 999,999,999),<br>0xFFFFFFFF: invalid<br>29th to 32nd bytes: Measured cumulative amount of discharge electric energy from battery. (DC value) (Wh)<br>0x00000000 to 0x3B9AC9FF<br>(0 to 999,999,999),<br>0xFFFFFFFF: invalid | unsigned long x 8 | 32 Bytes | Wh | Get | ○<br>*7 | | |



© 2000 - 2023 ECHONET Consortium

| | | | | | | | | | |
|---|---|---|---|---|---|---|---|---|---|
| Cumulative electric energy measurement by frequency regulation | 0xDF | This property indicates the various cumulative electric energy measurement values by frequency regulation at control point.<br>1st to 16th bytes: Cumulative electric energy measurement by EM control (Wh) x 4<br>0x00000000 to 0x3B9AC9FF<br>(0 to 999,999,999<br>17th to 32nd bytes: Cumulative electric energy measurement by command control (Wh) x 4<br>0x00000000 to 0x3B9AC9FF<br>(0 to 999,999,999),<br>0xFFFFFFFF: invalid<br>33rd to 48th bytes: Cumulative electric energy measurement by autonomous control (Wh) x 4<br>0x00000000 to 0x3B9AC9FF<br>(0 to 999,999,999),<br>0xFFFFFFFF: invalid | unsigned long x 12 | 48 Bytes | Wh | Get | | | |
| EM planned information | 0xE0 | This property indicates the number of EM planned data and the start date and time at control point.<br>1st to 2nd bytes: Update ID<br>0x0000 to 0xFFFF (0 to 65,535)<br>3rd to 4th bytes: Number of data<br>0x0000 to 0x0060 (0 to 96)<br>5th to 6th bytes: Month and day of first data in the MMDD format.<br>0x01 to 0x0C: 0x01 to 0x1F<br>(1 to 12): (1 to 31)<br>7th to 8th bytes: Hour and minute of first data in the HHMM format.<br>0x00 to 0x17: 0x00 to 0x3B<br>(0 to 23): (0 to 59) | unsigned short x 2 + unsigned char x 4 | 8 Bytes | - | Get | | | |
| EM planned value 1 | 0xE1 | This property indicates the planned power values of EM control.<br>48 singed longs (4 bytes x 48)<br>For normal direction:<br>0x00000000 to 0x3B9AC9FF<br>(0 to 999,999,999)<br>For reverse direction:<br>0xC4653601 to 0xFFFFFFFF<br>(-999,999,999 to -1) | signed long x 48 | 192 Bytes | W | Get | | | |
| EM planned value 2 | 0xE2 | This property indicates the planned power values of EM control.<br>48 singed longs (4 bytes x 48)<br>For normal direction:<br>0x00000000 to 0x3B9AC9FF<br>(0 to 999,999,999)<br>For reverse direction:<br>0xC4653601 to 0xFFFFFFFF<br>(-999,999,999 to -1) | signed long x 48 | 192 Bytes | W | Get | | | |



© 2000 - 2023 ECHONET Consortium

| | | | | | | | | | |
|---|---|---|---|---|---|---|---|---|---|
| Information of supply plan for regulaton up | 0xE3 | This property indicates the number of regulation up plan data and the start date and time.<br>1st to 2nd bytes: Update ID<br>0x0000 to 0xFFFF (0 to 65,535)<br>3rd to 4th bytes: Number of data<br>0x0000 to 0x0060 (0 to 96)<br>5th to 6th bytes: Month and day of first data in the MMDD format.<br>0x01 to 0x0C: 0x01 to 0x1F<br>(1 to 12): (1 to 31)<br>7th to 8th bytes: Hour and minute of first data in the HHMM format.<br>0x00 to 0x17: 0x00 to 0x3B<br>(0 to 23): (0 to 59) | unsigned short x 2 + unsigned char x 4 | 8 Bytes | - | Get | | | |
| Supply plan-1 for regulation up | 0xE4 | This property indicates the regulation up of supply plan at control point.<br>48 singed longs (4 bytes x 48).<br>For normal direction:<br>0x00000000 to 0x3B9AC9FF<br>(0 to 999,999,999)<br>For reverse direction:<br>0xC4653601 to 0xFFFFFFFF<br>(-999,999,999 to -1) | signed long x 48 | 192 Bytes | W | Get | | | |
| Supply plan-2 for regulation up | 0xE5 | This property indicates the regulation up of supply plan at control point.<br>48 singed longs (4 bytes x 48).<br>For normal direction:<br>0x00000000 to 0x3B9AC9FF<br>(0 to 999,999,999)<br>For reverse direction:<br>0xC4653601 to 0xFFFFFFFF<br>(-999,999,999 to -1) | signed long x 48 | 192 Bytes | W | Get | | | |
| Information of supply plan for regulation down | 0xE6 | This property indicates the regulation down of supply plan at control point.<br>1st to 2nd bytes: Update ID<br>0x0000 to 0xFFFF (0 to 65,535)<br>3rd to 4th bytes: Number of data<br>0x0000 to 0x0060 (0 to 96)<br>5th to 6th bytes: Month and day of first data in the MMDD format.<br>0x01 to 0x0C: 0x01 to 0x1F<br>(1 to 12): (1 to 31)<br>7th to 8th bytes: Hour and minute of first data in the HHMM format.<br>0x00 to 0x17: 0x00 to 0x3B<br>(0 to 23): (0 to 59) | unsigned short x 2 + unsigned char x 4 | 8 Bytes | - | Get | | | |



© 2000 - 2023 ECHONET Consortium

| | | | | | | | | | |
|---|---|---|---|---|---|---|---|---|---|
| Supply plan-1 for regulation down | 0xE7 | This property indicates the regulation down of supply plan at control point.<br>48 singed longs (4 bytes x 48).<br>For normal direction:<br>0x00000000 to 0x3B9AC9FF<br>(0 to 999,999,999)<br>For reverce direction:<br>0xC4653601 to 0xFFFFFFFF<br>(-999,999,999 to -1) | signed long x 48 | 192 Bytes | W | Get | | | |
| Supply plan-2 for regulation down | 0xE8 | This property indicates the regulation down of supply plan at control point.<br>48 singed longs (4 bytes x 48).<br>For normal direction:<br>0x00000000 to 0x3B9AC9FF<br>(0 to 999,999,999)<br>For reverce direction:<br>0xC4653601 to 0xFFFFFFFF<br>(-999,999,999 to -1) | signed long x 48 | 192 Bytes | W | Get | | | |

Note1: In the "Announcement at status change" column, ○ denotes mandatory processing if the property is implemented.

Note2: Implementation of data items that define invalid values for each property is recommended. Invalid values are allowed only when there is no measurement or no function.

Note3:

*1: Frequency regulation mode and frequency regulation state must be either command control or autonomous control, and EM target value control must be installed.

*2: Devices with command control functions are mandatory.

*3: Devices with autonomous control functions are mandatory.

*4: Devices that can use the power receiving point as a control point must implement the instantaneous power measurement value (W) at the power receiving point, and invalid are not allowed.

*5: If the relevant control is not performed, the value is invalid.

*6: It is mandatory to implement chargeable power (Wh) and dischargeable power (Wh).
In addition, it is mandatory to implement either the remaining stored electricity (DC Wh) or the state of charge (%).
And non-implemented values should be treated as invalid values.

*7: It is mandatory to install the measured cumulative amount of input electric energy (normal direction at device point) (Wh) and the measured cumulative amount of output electric energy (reverse direction at device point) (Wh).
In addition, it is recommended that devices that can use the power receiving point as a control point should be equipped with the measured cumulative amount of electric



© 2000 - 2023 ECHONET Consortium

energy bought from grid (Wh) and the measured cumulative amount of electric energy sold to grid (Wh).

Background that defines this class

In the demand-supply balancing market, frequency regulation using distributed energy resources is expected. High-speed control is required for frequency regulation. However, it is difficult to support high-speed control with conventional charge/discharge control in the storage battery class and electric vehicle charger/discharger class. In addition, this class was specified because properties specific to frequency regulation are required. This class is premised on providing up and down regulating capability to the reference value at the control point (device point or power receiving point).

An example of control points for each of the device point and the receiving point is shown in the figure below.

In this class, power and electric energy values shall be treated as AC values unless otherwise specified.

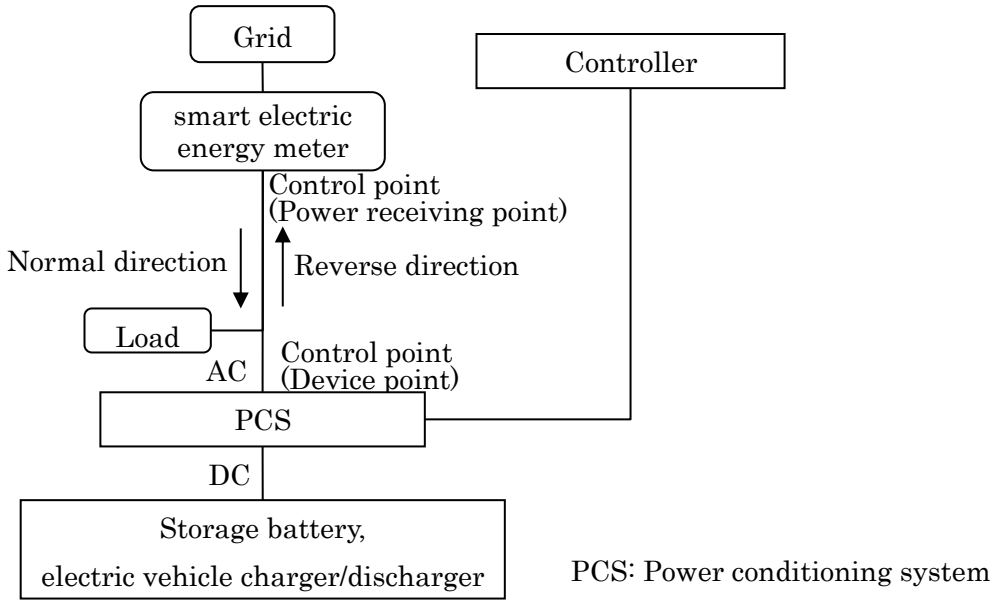




© 2000 - 2023 ECHONET Consortium

The figure below shows configuration examples that this class is implemented in ECHONET Lite nodes. This class is implemented in distributed energy resources such as storage battery, electric vehicle charger/discharger, and multi-input PCS. The device type property indicates the distributed energy resource equipped with this class. In addition, it is desirable that the device that provides ΔkW to the secondary regulation power 1 (LFC) should be equipped with a distributed generator's electric energy meter class for kWh accounts.

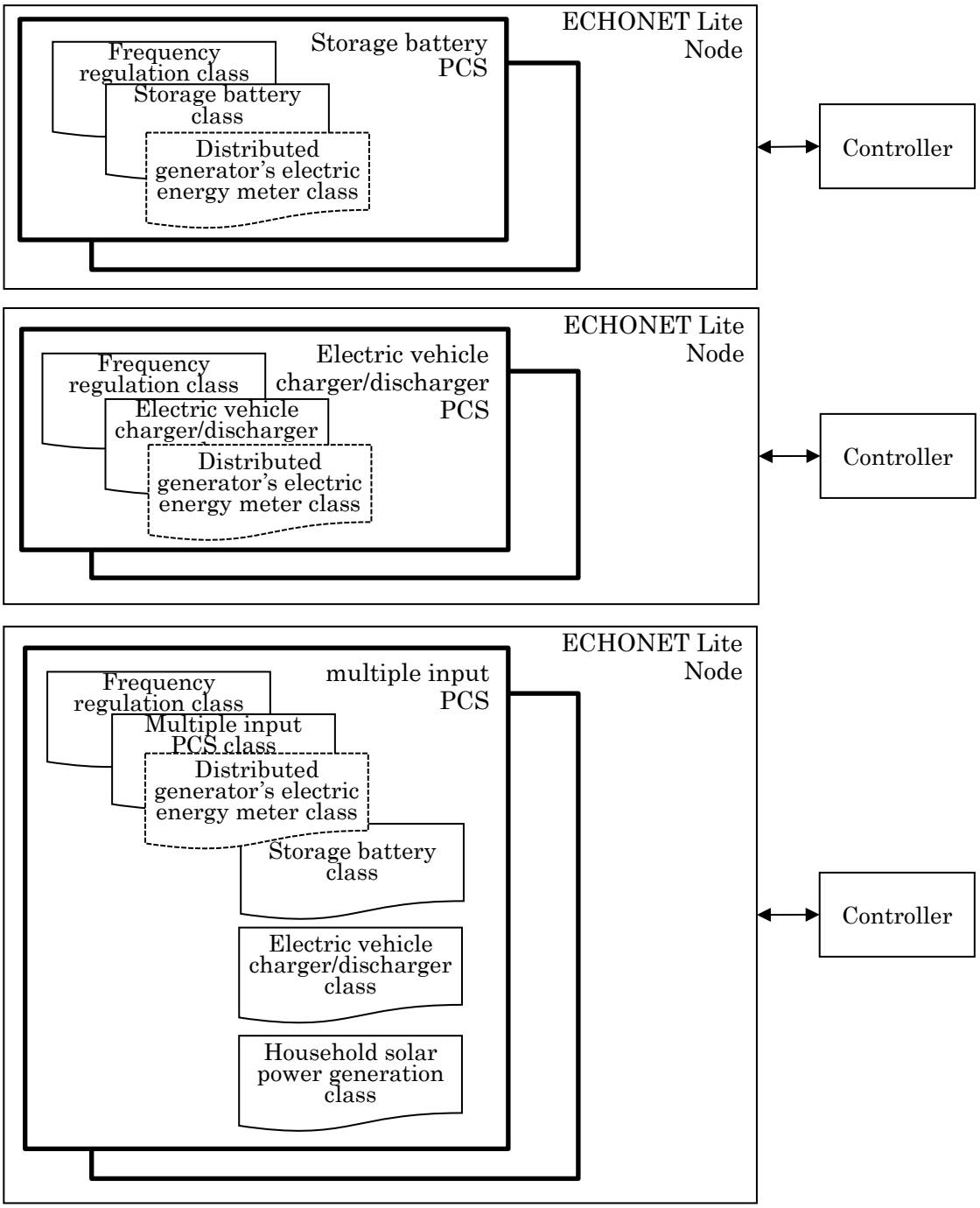




© 2000 - 2023 ECHONET Consortium

Terms and definitions for frequency regulation

・EM

Abbreviation for energy management

・Inputs and outputs for EM

Input/output power at control points by EM control (other than command control and autonomous control).

・EM planned value control

Frequency regulation is performed based on the EM plan planned by the device.

・EM target value control

Device operates frequency regulation based on the EM target power value of this class.

・EM target power value

This is the reference power for frequency regulation. Set from the controller during EM target value control.

・Command control

According to the power command value of the command control parameter of this class, the device raises and lowers the control point power based on the EM power target value during EM target value control and the EM plan planned by the device during EM planned value control.

・Autonomous control

Autonomous control raises or lowers the input/output power by the device itself according to the deviation from the reference frequency (50/60Hz). It is based on the EM target power value during EM target value control, and the EM plan planned by the device during EM planned value control. Autonomous control is the control for the primary regulation power (equivalent to GF).

・Response information

Response information when frequency regulation is performed.

(1) Operation status

This property indicates whether the function native to this class is operating or not (ON/OFF). In the node mounting this class, if the function of this class is started concurrently with the start of node operation, this property may be implemented at a fixed value of 0x30 (Operation status ON).

(2) Product code

The “Product code” property is the manufacturer's product code of a distributed energy resource that installs this class, denoted in a 12-byte ASCII code. “Product code” property values are not defined by the ECHONET Consortium; they are defined by each



© 2000 - 2023 ECHONET Consortium

manufacturer. When the "Product code" property value is less than 12 bytes, the product code shall be left-justified in the data area and the remainder of the data area shall be padded with NULLs or spaces.

(3) Production number

The "Production number" property indicates the production number of the relevant product of the manufacturer using a 12-byte ASCII code. "Production number" property values are not defined by the ECHONET Consortium; they are defined by each manufacturer. When the "Production number" property value is less than 12 bytes, the production number shall be left-justified in the data area and the remainder of the data area shall be padded with NULLs or spaces.

(4) Control point

This property indicates the power control point for frequency regulation, EM planned value control, and EM target value control. 0x30 when the device point is the control point, and 0x31 when the power receiving point is the control point.
Devices that cannot be set in this property are implemented as a fixed values or set by the device.

(5) Frequency regulation parameter setting

This property indicates the parameters for frequency regulation.

1st and 2nd bytes are the frequency regulation mode. Sets the mode as a bitmap.

Bit 0: Command control
Bit 1: Autonomous control
Bit 8: EM planned value control
Bit 9: EM target value control

1 if the control is valid, 0 if it is invalid.

Command control and autonomous control may be set at the same time. Either EM planned value control or EM target value control is set along with command control and autonomous control. EM planned value control and EM target value control are not set at the same time.

The device controls the power of the control point that serves as the reference for frequency regulation according to EM planned value control or EM target value control set in the frequency regulation mode of frequency regulation parameter setting.

If the device has an EM plan, it is necessary to indicate the planned power in the EM plan property in advance regardless of the frequency regulation mode.

In EM planned value control, the power of the control point is regulated to the EM planned value 1 and EM planned value 2.



© 2000 - 2023 ECHONET Consortium

In EM target value control, the power of the control point is regulated to the EM target power value.
In command control, the device superimpose the power value (W) of the current control instruction set in the command control parameter setting property, to the power of the control point.
In autonomous control, the device superimposes a power calculated by the autonomous control parameter property based on the frequency, to the power of the control point.

When both command control and autonomous control are valid, the power of the control point is regulated to a power superimposed with the power value of command control instruction and the power value of autonomous control.
In either case, the input/output direction of the device may change due to the change in the magnitude of the power to be superimposed.
When any bit of the frequency regulation mode is valid, the frequency regulation operation set in the frequency regulation mode is performed. When all bits of the frequency regulation mode are invalid, the device stops frequency regulation and performs device specific EM operation.
Conceptual image of superimpose by frequency regulation to the control point with the current command control instruction and the power value of autonomous control.

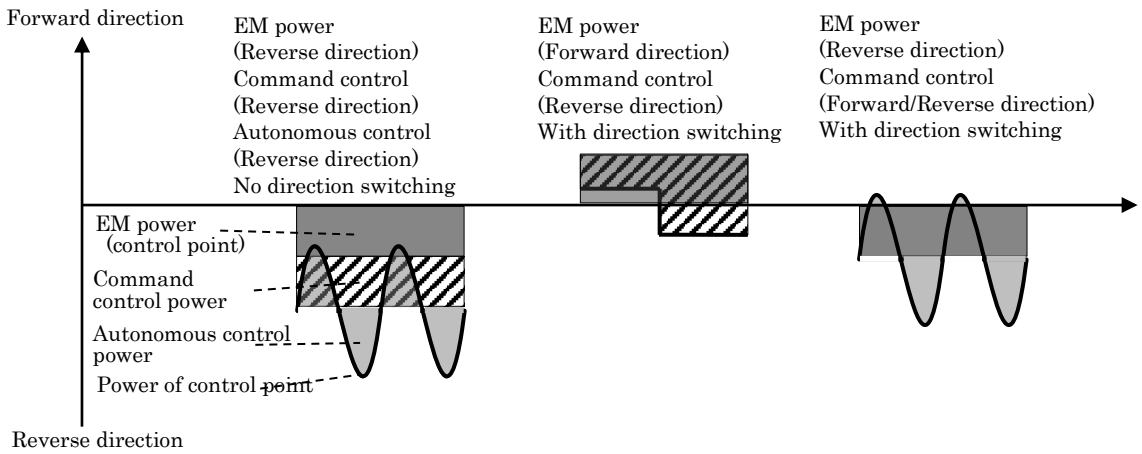


The 3rd and 4th bytes are timer values related to no-communication watchdog timer with the controller. Sets the timer value in units of 10msec. The value range shall be 0x0000 to 0xFFFF (0 to 65,535). Initial value is 0. If it is 0, no processing related to no-communication watchdog timer is performed. If a value shorter than the transmittable cycle is set, the transmittable cycle is set as the no-communication watchdog timer value.



© 2000 - 2023 ECHONET Consortium

During frequency regulation, if the controller does not Set or Get the properties of this class for the time set in the timer value, the device stops frequency regulation.
Then, an EM operation specific to the device is performed, and the frequency regulation state of the information of frequency regulation property are made performd.
Even after communication is restored, the device specific EM operation is performed until the frequency regulation mode is set again. Since the device specific EM operation depends on the specifications and settings of the device, it does not always return to the specific EM operation when the frequency regulation is stopped.
Conceptual image of switching between frequency regulation and device specific EM operation is shown below.

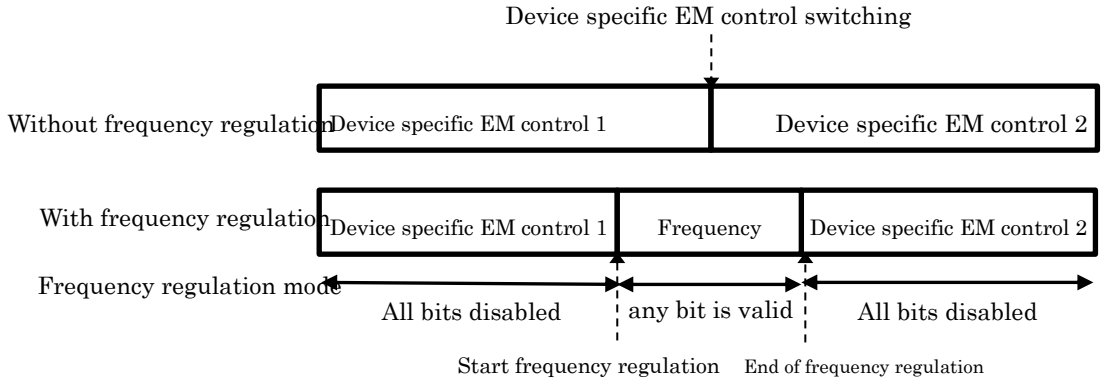


(6) EM target power value

Set the AC power value in watts for the power at the control point, which is the reference value for frequency regulation. The value range shall be 0x00000000 to 0x3B9AC9FF (0 to 999,999,999) and 0xC4653601 to 0xFFFFFFFF (-999,999,999 to -1), with the normal direction being positive and the reverse direction being negative.
When EM target value control is set for the frequency regulation mode of the frequency regulation parameter setting, the device increases or decreases the input/output of the control point based on the EM power target value.

(7) Command control parameter setting

Set the control parameter for regulating power.
The 1st to 4th bytes is a command control instruction number. The value range shall be 0x00000000 to 0x3B9AC9FF (0 to 999,999,999).
In the 5th to 8th bytes, set the power command value as an AC value in W. The value range shall be 0x00000000 to 0x3B9AC9FF (0 to 999,999,999) and 0xC4653601 to 0xFFFFFFFF (-999,999,999 to -1), with the normal direction being positive and the



© 2000 - 2023 ECHONET Consortium

reverse direction being negative.

When power command control is set in the control mode of the frequency regulation parameters setting, the device controls the power of the control point to a value obtained by superimposing the EM target power value and the power command value of the command control parameter setting.

Since the power command value is updated as needed, power continues to be superimposed according to the most recently set command power value while command control is effective.

When the command control power value is updated, the command control instruction number is also updated.

(8) Autonomous control parameter setting 1

Set the parameters necessary for autonomous control at the control point.

The 1st and 2nd bytes are the dead band width in the positive direction, and the 3rd and 4th bytes are the dead band width in the negative direction.

The unit is mHz, and the value range is 0x0000 to 0x03E8 (0 to 1,000).

The 5th to 12th bytes is a power change rate, and the power change rate is set in units of W/mHz.

The 5th to 8th bytes is a power change rate in normal direction, and the 9th to 12th bytes is a power change rate in reverse direction. The value range shall be 0x00000000 to 0x3B9AC9FF (0 to 999,999,999).

In the 13th to 20th bytes, set an autonomous control power upper limit in units of W.

The 13th to 16th bytes is a power upper limit for autonomous control in normal direction, and the 17th to 20th bytes is a power upper limit for autonomous control in reverse direction. The value range shall be 0x00000000 to 0x3B9AC9FF (0 to 999,999,999).

Set the abnormal frequency deviation threshold in mHz units in the 21st and 22nd bytes. The value range shall be 0x0000 to 0x03EB (0 to 1,000).

When autonomous control is set as the frequency regulation mode of the frequency regulation parameter setting, the device controls the power of the control point to a value obtained by superimposing the EM target power value and the calculated value based on the autonomous control parameter.

An image of calculating autonomous control power from system frequency using autonomous control parameters is shown below.



© 2000 - 2023 ECHONET Consortium

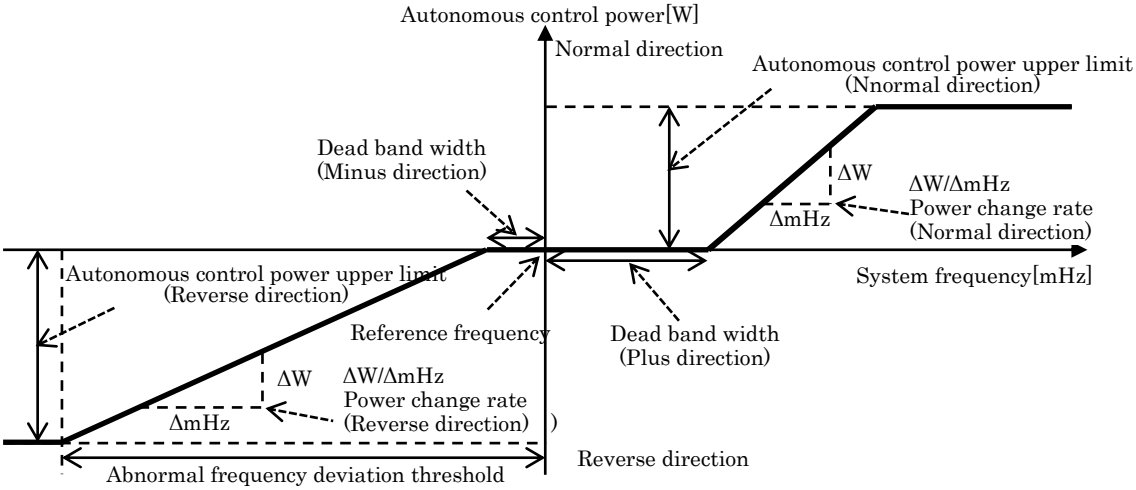


Differences by the power change rate around the abnormal frequency deviation threshold are shown below.

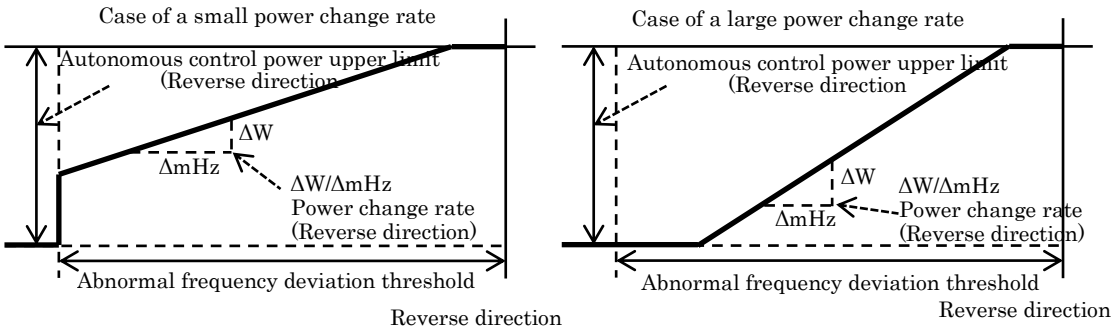


(9) Autonomous control parameter setting 2

Set the parameters (options) required for autonomous control at control point.

Set the filter time constant in the 1st to 4th bytes.

The 1st and 2nd bytes are the low-pass filter, and the 3rd and 4th bytes are the high-pass filter. The value range shall be 0x0000 to 0xFFFF (0 to 65,535).

Set the PI control coefficient in the 5th to 8th bytes.

The 5th and 6th bytes are the proportional gain, and the 7th and 8th bytes are the integral gain. The value range shall be 0x0000 to 0xFFFF (0 to 65,535).

In the 9th to 16th bytes, set the rate limiter in units of W/sec.

The 9th to 12th bytes are the rate limiter for changes in normal direction, and the 13th to 16th bytes are the rate limiters for changes in reversedirection. The value range shall be 0x00000000 to 0x3B9AC9FF (0 to 999,999,999).



© 2000 - 2023 ECHONET Consortium

(10) Autonomous control parameter setting 3

In order to correct the autonomous control power calculated in the autonomous control parameter setting 1, five pairs of values of the autonomous control power before correction and the autonomous control power after correction are set.

Each autonomous control power is 4 bytes and the value range is 0x00000000 to 0x3B9AC9FF (0 to 999,999,999), 0xC4653601 to 0xFFFFFFFF (-999,999,999 to -1). The normal direction is positive, and the reverse direction is negative.

A conceptual image of correcting autonomous control power is shown below.

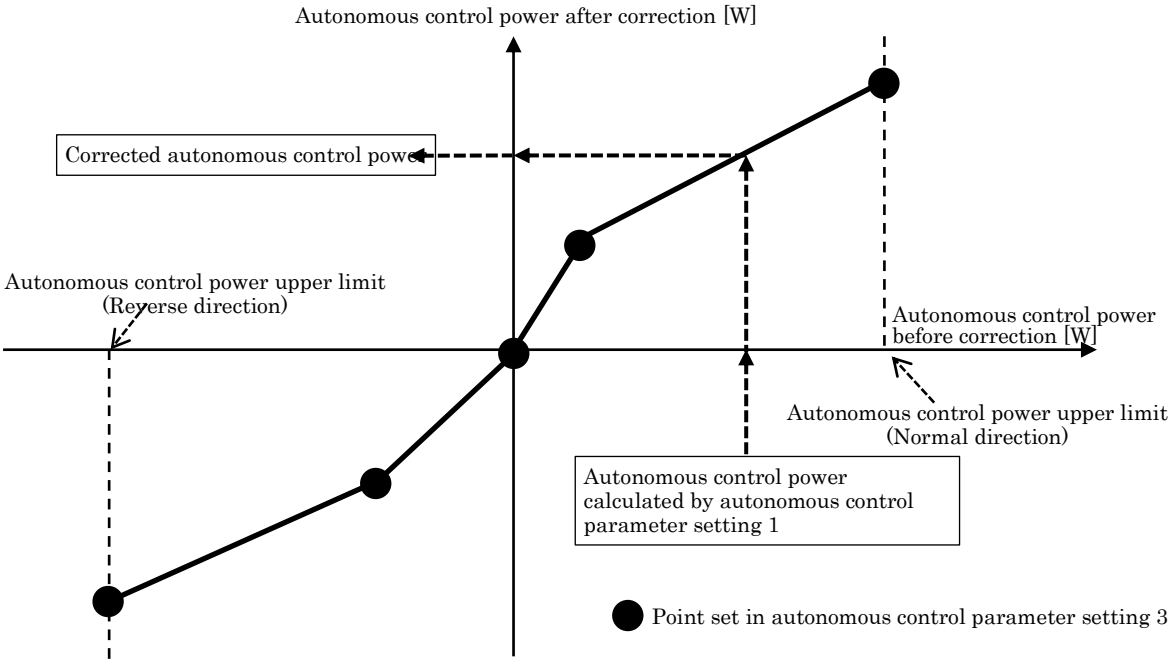


(11) Correction value for reference frequency

This property indicates the correction value for reference frequency, and the unit is mHz. The value range shall be 0xFF9C to 0xFFFF (-100 to -1), 0x0000 to 0x0064 (0 to 100).

Normally, the reference frequency is 50 Hz or 60 Hz, but autonomous control is performed using the frequency obtained by adding the value set to the reference frequency correction value as the reference frequency.

This property is prepared on the assumption that the reference frequency correction value will be used by aggregators, etc., and will not be used in the demand-supply balancing market.

(12) Transmittable/receivable cycle



© 2000 - 2023 ECHONET Consortium

This property indicates the possible transmittable/receivable cycle of an ECHONET Lite node equipped with this class in units of 10 msec.
The transmittable/receivable cycle is the time during which the controller can determine that there is no response and transmit the next command. The value range shall be 0x0000 to 0xFFFF (0 to 65,535).

(13) Device type
This property indicates the target device of frequency regulation with class group code (0x00 to 0xFF) + class code (0x00 to 0xFF) + instance code (0x01 to 0x7F).
In the case of multiple input PCS, set the device type to multiple input PCS instead of the DC side device.

(14) Values of AC max power
This property indicates the maximum AC power value of the device in watts at device point.
The 1st to 4th bytes is the AC maximum input power value, and the 5th to 8th bytes is the AC maximum output power value. The value range shall be 0x00000000 to 0x3B9AC9FF (0 to 999,999,999).

(15) Value of contract power
This property indicates the contract power at power receiving point with electric power company in watts. The value range shall be 0x000000000 to 0x3B9AC9FF (0 to 999,999,999).

(16) Device control performance
This property indicates the upper and lower limits of autonomous control performance of device at the device point.
The 1st to 4th bytes indicates the dead band width in mHz units.
The 1st and 2nd bytes are the upper limit of the dead band width, and the 3rd and 4th bytes are the lower limit of the dead band width. The value range shall be 0x0000 to 0x03E8 (0 to 1,000).
The 5th to 12th bytes indicates the power change rate upper and lower limits in units of W/mHz.
The 5th to 8th bytes is the upper limit of the power change rate, and the 9th to 12th bytes are the lower limit of the power change rate. The value range shall be 0x00000000 to 0x3B9AC9FF (0 to 999,999,999).
The 13th to 20th bytes indicates the power change speed upper and lower limits in W/sec



© 2000 - 2023 ECHONET Consortium

units.

The 13th to 16th bytes is the upper limit of the power change speed, and the 17th to 20th bytes are the lower limit of the power change speed. The value range shall be 0x00000000 to 0x3B9AC9FF (0 to 999,999,999).

If there is no upper limit, the maximum value of the range is used, and if there is no lower limit, the minimum value of the range is used.

(17) Information of frequency regulation

This property indicates the presence or absence of functions related to the frequency regulation service and the current frequency regulation status.

The 1st and 2nd bytes indicate by bitmap whether each control function is provided.

Bit 0: Command control
Bit 1: Autonomous control
Bit 8: EM planned value control
Bit 9: EM target value control

1 if participation is possible, 0 if not.

It is whether the device has each control function or not, and participation should not be disabled when control is temporarily disabled.

The 3rd and 4th bytes indicate the current frequency regulation status.

Bit 0: Command control
Bit 1: Autonomous control
Bit 8: EM planned value control
Bit 9: EM target value control
But 15: Out of control

If the operation of each frequency regulation mode of frequency regulation parameter setting is performed, it is set to 1, and if it is not performed, it is set to 0.

Set bit 15 (out of control) to 1 if the operation set in the frequency regulation mode of the frequency regulation parameter setting cannot be performed.

(18) Detailed information of whether the device can continue to control

The upper 1 byte of this property indicates whether frequency regulation can be continued. 0x00 is normal, 0x01 continues frequency regulation within the operable range, and 0x02 stops frequency regulation.

The lower 1 byte indicates detailed information on control restrictions and continuation impossibility in bits. Multiple bits may be 1 at the same time.



© 2000 - 2023 ECHONET Consortium

| Upper byte<br>Whether to continue control | Lower byte<br>Detailed information |
|---|---|
| 0x00: Normal | Reserved for future use |
| 0x01: Contonuing with restriction | Bit 0: Response in normal direction not possible (Full charge etc.)<br>Bit 1: Response in reverse direction not possible<br>(Lower discharge limit, no reverse power flow, etc.)<br>Bit 2: Restriction of response in normal direction (Contract demand control, etc.)<br>Bit 3: Restriction of response in reverse direction (Insufficient load, voltage suppression,<br>no reverse power flow, etc.)<br>Bit 4 to 6: Reserved for future use<br>Bit7: Other continuation possible anomalies |
| 0x02: Continuation impossible | Bit 0: long-term anomalies (failure, etc.)<br>Bit 1: Temporary anomaly<br>(Automatic recovery error, User operation,<br>Effective capacity recalculation processing, etc.)<br>Bit 2: Frequency regulation setting error<br>(Instructions that exceed the device rating, etc.)<br>Bit 3: no communication<br>Bit 4: Grid failure<br>Bit 5 to 6: Reserved for future use<br>Bit 7: Other non-continuable anomalies |

(19) Information of EM

This property indicates the current specific EM operational information proprietary to device.

This property is used for estimating the state of the device (charge level, etc.) when starting frequency regulation.

The 1st to 2nd bytes and the 3rd to 4th bytes indicate the charging start time and end time as hours: 0x00 to 0x17 (0 to 23) and minutes: 0x00 to 0x3B (0 to 59). If not set, the invalid value is 0xFFFF.

The 5th to 6th bytes and the 7th to 8th bytes indicate the discharge start time and end time as hours: 0x00 to 0x17 (0 to 23) and minutes: 0x00 to 0x3B (0 to 59). If not set, the invalid value is 0xFFFF.

The 9th byte indicates an area not normally used, for such as BCP, etc., with 0x00 to 0x64 (0 to 100%).

The 10th byte indicates the upper limit of charging from the grid, such as late-night power,



© 2000 - 2023 ECHONET Consortium

with 0x00 to 0x64 (0 to 100%).

The 11th to 14th bytes is a power threshold for cutting peak demand power. The value range is 0x00000000 to 0x3B9AC9FF (0 to 999,999,999W), and if not set, the invalid value is 0xFFFFFFFF.

The 15th to 18th bytes is the electric energy for cutting the peak of the demand energy for each 30-minute frame.

The value range is 0x00000000 to 0x3B9AC9FF (0 to 999,999,999W), and if not set, the invalid value is 0xFFFFFFFF.

The 19th byte indicates the presence or absence of PV surplus charging, the 20th byte indicates the presence or absence of PV reverse flow, and the 21st byte indicates the presence or absence of PCS push-up effect. Each byte is 0x41 if present and 0x42 if absent.

(20) Measured instantaneous values of PCS

This property indicates the instantaneous values measured by the PCS.

The 1st and 2nd bytes indicate the instantaneous frequency measured by the PCS in mHz. The value range is 0x0000 to 0xFFFD (0 to 65,533), and 0xFFFF (65,535) when not measured.

The 3rd to 6th bytes indicates the instantaneous power in watts measured by the PCS at the device point. The normal direction is positive, the value range is 0x00000000 to 0x3B9AC9FF (0 to 999,999,999), the reverse direction is negative, and the value range is 0xFFFFFFFF to 0xC4653601 (-1 to -999,999,999).

The 7th to 10th bytes indicates the instantaneous power in watts measured by the PCS at the power receiving point. The normal direction is positive, the value range is 0x00000000 to 0x3B9AC9FF (0 to 999,999,999), the reverse direction is negative, and the value range is 0xFFFFFFFF to 0xC4653601 (-1 to -999,999,999). Set to 0x7FFFFFFF when not measured.

(21) Response information

This property indicates the response actual performance at the control point by frequency regulation and is used for evaluation such as assessment.

The 1st to 4th bytes indicates the AC instantaneous power measurement value of the control point in watts. The value range is 0x00000000 to 0x3B9AC9FF (0 to 999,999,999), 0xC4653601 to 0xFFFFFFFF (-999,999,999 to -1), with normal direction being positive and reverse direction being negative.

The 5th to 16th bytes indicates each control power value in watts at the time when the AC instantaneous power measurement value is measured.

The 5th to 8th bytes is the EM control power value, the 9th to 12th bytes is the command



© 2000 - 2023 ECHONET Consortium

control power value, and the 13th to 16th bytes is the autonomous control power value. The range of values is 0x00000000 to 0x3B9AC9FF (0 to 999,999,999) and 0xC4653601 to 0xFFFFFFFF (-999,999,999 to -1), and the normal direction is positive, and the reverse direction is negative.

If each control power value in 5th to 16th bytes cannot be indicated, set it to 0x7FFFFFFF.

If each electric power cannot be controlled according to the target value, planned value, and command value, the actual control electric power value is used.

The 17th to 20th bytes indicates the power command instruction number when the command control power value (power command value) shown in the 9th to 12th bytes is set. Note that before receiving the command (control mode is 0), the invalid value is 0xFFFFFFFF, and the power command instruction number is returned even if the operation is not performed as instructed.

The 21st and 22nd bytes indicate the grid frequency deviation in mHz units.

The value range is 0xF448 to 0xFFFF (-3,000 to -1), 0x0000 to 0x0BB8 (0 to 3,000), and 0x7FFF if the autonomous control function is not provided.

The image of Set and Get of the power command instruction number is shown below.

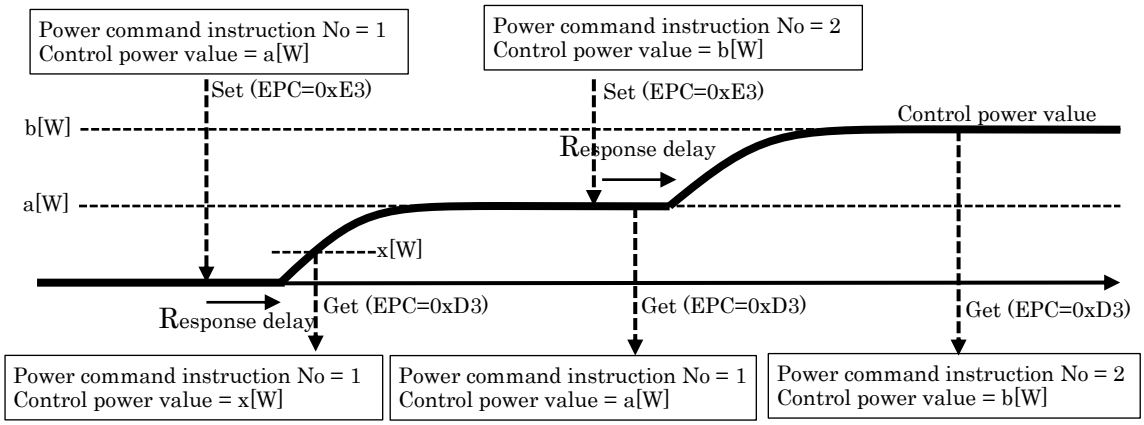


(22) Instantaneous input and output power capability value

This property indicates the upper limit of the current capable input/output power in watts at the device point.

These values are used for estimating the controllable supply amount and the reference value, and for calculating the control amount.

The current upper limit value is the rating of the device under normal conditions, but if it is suppressed, the upper limit value is the suppression value. In the case of full charge, the normal direction is 0W, and in the case of the discharge lower limit, the reverse



© 2000 - 2023 ECHONET Consortium

direction is 0W.

The 1st to 4th bytes is the power value that can be input, and the 5th to 8th bytes is the power value that can be output.

The value range shall be 0x00000000 to 0x3B9AC9FF (0 to 999,999,999).

(23) Instantaneous chargeable and dischargeable power values

This property indicates the upper limit of the power that can be charged/discharged at the DC end of the PCS, in watts.

In a multiple input PCS equipped with both a storage battery and a vehicle-mounted storage battery, the sum of the storage battery and the vehicle-mounted storage battery shall be used.

These values are used for estimating the controllability supply amount and the reference value, and for calculating the control amount.

The 1st to 4th bytes is charging, and the 5th to 8th bytes is discharging. The value range shall be 0x00000000 to 0x3B9AC9FF (0 to 999,999,999).

(24) Battery status

This property indicates the current state of the battery. In a multiple input PCS equipped with both a storage battery and a vehicle-mounted storage battery, the sum of the storage battery and the vehicle-mounted storage battery shall be used.

The 1st to 8th bytes indicates the AC chargeable/dischargeable amount that can be charged/discharged to the storage battery and the vehicle-mounted storage battery in Wh units.

The 1st to 4th bytes is the chargeable electric energy amount, and the 5th to 8th bytes are the dischargeable power amount. The value range shall be 0x00000000 to 0x3B9AC9FF (0 to 999,999,999).

The 9th to 12th bytes indicates the remaining charge (DC value) of the storage battery and the vehicle-mounted storage battery in Wh units. The value range is 0x00000000 to 0x3B9AC9FF (0 to 999,999,999), and 0xFFFFFFFF if the remaining battery charge cannot be indicated.

The 13th byte indicates the amount of power remaining in the storage battery and the vehicle-mounted storage battery in %. The value range is 0x00 to 0x64 (0 to 100), and 0xFF if the remaining charge of the storage battery cannot be indicated.

Note that, it is required to implement either the remaining charge (DC value) (Wh) or the remaining charge (%).

The 14th byte indicates the state of deterioration of the storage battery in %. The value range shall be 0x00 to 0x64 (0 to 100). Set to 0xFF if the state of deterioration of the



© 2000 - 2023 ECHONET Consortium

storage battery cannot be indicated.

(25) Cumulative electric energy measurement values

This property indicates the measured value of each accumulated energy in Wh.

The value range shall be 0x00000000 to 0x3B9AC9FF (0 to 999,999,999).

These amounts of electric power are used not only for settlement but also for predicting each future electric amount.

The 1st to 8th bytes indicates the integrated input/output electric energy measurement value at the device point.

The 1st to 4th bytes is the input electric energy amount, and the 5th to 8th bytes is the output electric energy amount.

The 9th to 16th bytes indicates the measured value of the integrated electric energy purchase and sale at the power receiving point, and 0xFFFFFFFF if not measured.

The 9th to 12th bytes is the purchased electric energy amount (normal power flow), and the 13th to 16th bytes is the sold electric energy amount (reverse power flow).

The 17th to 20th bytes indicates the customer's cumulative load electric energy measurement value, and 0xFFFFFFFF if not measured.

The 21st to 24th bytes indicate the measured value (DC value) of the integrated electric energy of photovoltaic power generation, and 0xFFFFFFFF if not measured.

The 25th to 32nd bytes indicate the cumulative charge/discharge energy energy measurement value at the DC end of the device. In a multiple input PCS equipped with both a storage battery and a vehicle-mounted storage battery, this is the sum of the stationary storage battery and the vehicle-mounted storage battery, and 0xFFFFFFFF if not measured.

The 25th to 28th bytes are the accumulated charge energy amount (DC value), and the 29th to 32nd bytes are the accumulated discharge energy amount (DC value).

(26) Cumulative electric energy measurement by frequency regulation

This property indicates the measured value of the frequency regulation integrated energy at the control point in Wh units. The value range shall be 0x00000000 to 0x3B9AC9FF (0 to 999,999,999).

These measurements are used to decompose the amount of input and output power at the control points into the amount of power due to each control.

The 1st to 16th bytes indicates the EM control integrated electric energy measured value, the 17th to 32nd bytes indicate the command control integrated electric energy measured value, and the 33rd to 48th bytes indicate the autonomous control integrated electric



© 2000 - 2023 ECHONET Consortium

energy measured value.

The measured value of the command control integrated electric energy when the command control function is not provided, and the autonomous control integrated electric energy measured value when the autonomous control function is not provided shall be 0xFFFFFFFF.

The integrated electric energy measurement value for each control is classified into the following four types according to the combination of the direction of each control power and the input/output direction at the control point of the device, and each is indicated in order by 4 bytes.

1) Control power in normal direction, input/output in normal direction
2) Control power in normal direction, input/output in reverse direction
3) Control power in reverce direction, input/output in normal direction
4) Control power in reverse direction, input/output in reverse direction

(27) EM planned information

This property indicates the update ID, number of data, and start date/time of the EM plan at the control point.

The 1st and 2nd bytes indicate the update ID. The value range shall be 0x0000 to 0xFFFF (0 to 65,535).

When the EM planned value is updated, the update ID value is also updated.

The 3rd and 4th bytes indicate the number of EM planned value data. The value range shall be 0x0000 to 0x0060 (0 to 96).

The 5th to 8th bytes is the date and time of the first data of the EM planned value.

Month: 0x01 to 0x0C (1 to 12), day: 0x01 to 0x1F (1 to 31), hour: 0x00 to 0x17 (0 to 23), minute: 0x00 to 0x3B (0 to 59).

(28) EM planned value 1

This property indicates the EM planned value in W every 30 minutes from the top.

The value range is 0x00000000 to 0x3B9AC9FF (0 to 999,999,999), 0xC4653601 to 0xFFFFFFFF (-999,999,999 to -1), with normal direction being positive and reverse direction being negative.

Each 4 bytes indicates the planned value for the amount of data in the EM planned information, and the area exceeding the number of data is set to 0x7FFFFFFF. If 48 cases are insufficient, the subsequent planned values are shown in EM planned value 2.

Combined with EM planned value 2, a maximum of 96 cases, i.e., planned values for two days can be shown.



© 2000 - 2023 ECHONET Consortium

(29) EM planned value 2

This property indicates the EM planned value in watts for every 30 minutes from the beginning of the plan following the EM planned value 1.

The value range is 0x00000000 to 0x3B9AC9FF (0 to 999,999,999), 0xC4653601 to 0xFFFFFFFF (-999,999,999 to -1), with normal direction being positive and reverse direction being negative. Use 0x7FFFFFFF for areas exceeding the numbers of data.

Combined with EM planned value 1, a maximum of 96 cases, i.e., planned values for two days can be shown.

(30) Information of supply plan for regulation up

This property indicates the update ID, the number of data, and the start date and time of the supply plan for regulaton up at the control point.

The 1st and 2nd bytes indicate the update ID. The value range shall be 0x0000 to 0xFFFF (0 to 65,535).

When the supply plan for regulation up is updated, the update ID value is also updated.

The 3rd and 4th bytes indicate the numbers of data for the supply plan for regulation up. The value range shall be 0x0000 to 0x0060 (0 to 96).

The 5th to 8th bytes is the date and time of the top data of the supply plan for regulation up.

Month: 0x01 to 0x0C (1 to 12), day: 0x01 to 0x1F (1 to 31), hour: 0x00 to 0x17 (0 to 23), minute: 0x00 to 0x3B (0 to 59).

(31) Supply plan-1 for regulation up

This property indicates the supply plan for regulation up in W every 30 minutes from the top.

The value range is 0x00000000 to 0x3B9AC9FF (0 to 999,999,999), 0xC4653601 to 0xFFFFFFFF (-999,999,999 to -1), with normal direction being positive and reverse direction being negative.

Each 4 bytes indicates the planned value as much as the amount of data in the information of supply plan for regulation up, and the area exceeding the number of data is set to 0x7FFFFFFF. If 48 cases are insufficient, the subsequent planned values are shown in the supply plan-2 for regulation up.

A maximum of 96 cases, i.e., planned values for 2 days, can be shown in combination with the planned value for supply plan-2 for regulation up.

(32) Supply plan-2 for regulation up

The 48 continuation plans of the supply plan-1 for regulation up is shown in order from



© 2000 - 2023 ECHONET Consortium

the top, and the supply plan for regulation up every 30 minutes is shown in watts.
From the beginning, the planned value for the supply plan for regulation up every 30 minutes is shown in watts.
The value range is 0x00000000 to 0x3B9AC9FF (0 to 999,999,999), 0xC4653601 to 0xFFFFFFFF (-999,999,999 to -1), with normal direction being positive and reverse direction being negative. Use 0x7FFFFFFF for areas exceeding the amount of data.
A maximum of 96 cases, i.e., planned values for 2 days, can be shown in combination with the supply plan-1 for regulation up.

(33) Information of supply plan for regulation down
This property indicates the update ID, the number of data, and the start date and time of the supply plan for regulation down at the control point.
The 1st and 2nd bytes indicate the update ID. The value range shall be 0x0000 to 0xFFFF (0 to 65,535).
When the supply plan for regulation down is updated, the update ID value is also updated.
The 3rd and 4th bytes indicate the numbers of data for the supply plan for regulation down. The value range shall be 0x0000 to 0x0060 (0 to 96).
The 5th to 8th bytes is the date and time of the top data of the supply plan for regulation down.
Month: 0x01 to 0x0C (1 to 12), day: 0x01 to 0x1F (1 to 31), hour: 0x00 to 0x17 (0 to 23), minute: 0x00 to 0x3B (0 to 59).

(34) Supply plan-1 for regulation down
This property indicates the supply plan for regulation down in W every 30 minutes from the top.
The value range is 0x00000000 to 0x3B9AC9FF (0 to 999,999,999), 0xC4653601 to 0xFFFFFFFF (-999,999,999 to -1), with normal direction being positive and reverse direction being negative.
Each 4 bytes indicates the planned value as much as the amount of data in the information of supply plan for regulation down, and the area exceeding the number of data is set to 0x7FFFFFFF. If 48 cases are insufficient, the subsequent planned values are shown in the supply plan-2 for regulation down.
A maximum of 96 cases, i.e., and planned values for 2 days can be shown in combination with the planned value for supply plan-2 for regulation down.

(35) Supply plan-2 for regulation down
The 48 continuation plans of the supply plan-1 for regulation down is shown in order from



© 2000 - 2023 ECHONET Consortium

the top, and the supply plan for regulation down every 30 minutes is shown in watts.
From the beginning, the planned value for the supply plan for regulation down every 30 minutes is shown in watts.
The value range is 0x00000000 to 0x3B9AC9FF (0 to 999,999,999), 0xC4653601 to 0xFFFFFFFF (-999,999,999 to -1), with normal direction being positive and reverse direction being negative. Use 0x7FFFFFFF for areas exceeding the amount of data.
A maximum of 96 cases, i.e., planned values for 2 days, can be shown in combination with the supply plan-1 for regulation down.



© 2000 - 2023 ECHONET Consortium

# 3．4 Cooking/Household-related Device Class Group

This section specifies detailed codes and properties for each ECHONET object belonging to the cooking/household-related device class group (class group specification code X1 = 0x03). Table 3-5 shows a list of classes specified in detail in this section. In the requirements of classes, “Mandatory” means that the device mounting each class must mount a combination of its property and service.

**Table 3-5 List of Objects of Cooking/Household-related Device Class Group**

| Class group code | Class code | Class name | Detailed requirements | Remarks |
|---|---|---|---|---|
| 0x03 | 0x00 to 0xAF | Reserved for future use | | |
| | 0xB0 | Coffee machine | | |
| | 0xB1 | Coffee mill | | |
| | 0xB2 | Electric hot water pot (Electric thermos) | ○ | |
| | 0xB3 | Electric stove | | |
| | 0xB4 | Toaster | | |
| | 0xB5 | Juicer, food mixer | | |
| | 0xB6 | Food processor | | |
| | 0xB7 | Refrigerator | ○ | |
| | 0xB8 | Combination microwave oven (Electronic oven) | ○ | |
| | 0xB9 | Cooking heater | ○ | |
| | 0xBA | Oven | | |
| | 0xBB | Rice cooker | ○ | |
| | 0xBC | Electronic jar | | |
| | 0xBD | Dish washer | | |
| | 0xBE | Dish dryer | | |
| | 0xBF | Electric rice card cooker | | |
| | 0xC0 | Keep-warm machine | | |
| | 0xC1 | Rice mill | | |
| | 0xC2 | Automatic bread cooker | | |
| | 0xC3 | Slow cooker | | |
| | 0xC4 | Electric pickles cooker | | |
| | 0xC5 | Washing machine | ○ | |
| | 0xC6 | Clothes dryer | ○ | |
| | 0xC7 | Electric iron | | |
| | 0xC8 | Trouser press | | |



© 2000 - 2023 ECHONET Consortium

| | | | | |
|---|---|---|---|---|
| | 0xC9 | Futon dryer | | |
| | 0xCA | Small article, shoes dryer | | |
| | 0xCB | Electric vacuum cleaner (including central vacuum cleaner) | | |
| | 0xCC | Disposer | | |
| | 0xCD | Electric mosquito catcher | | |
| | 0xCE | Commercial show case | ○ | |
| | 0xCF | Commercial refrigerator | | |
| | 0xD0 | Commercial hot case | | |
| | 0xD1 | Commercial fryer | | |
| | 0xD2 | Commercial microwave oven | | |
| | 0xD3 | Washer and dryer | ○ | |
| | 0xD4 | Commercial show case outdoor unit | ○ | |
| | 0xD5 | Dishwasher and dryer | ○ | |
| | 0xD6 to 0xFF | Reserved for future use | | |

Note: ○ indicates a detail is explained including a property structure in APPENDIX.



© 2000 - 2023 ECHONET Consortium

# 3．4．1 Requirements for electric hot water pot (Electric thermos)

Class group code : 0x03

Class code : 0xB2

Instance code : 0x01–0x7F (0x00: All-instance specification code)

| Property name | EPC | Contents of property | Data type | Data size | Unit | Access rule | Man-datory | Announce-ment at status change | Remark |
|---|---|---|---|---|---|---|---|---|---|
| | | Value range (decimal notation) | | | | | | | |
| Operation status | 0x80 | This property indicates the ON/OFF status. | unsigned char | 1 byte | — | Set | | ○ | |
| | | ON=0x30, OFF=0x31 | | | | Get | ○ | | |
| Cover open/close status | 0xB0 | Cover open/close status | unsigned char | 1 byte | – | Get | | | |
| | | Cover open = 0x41, cover closed = 0x42 | | | | | | | |
| No-water warning | 0xB1 | Notifies that electric hot water pot is emptied of water. | unsigned char | 1 byte | – | Get | | ○ | |
| | | No-water condition found = 0x41<br>No-water condition not found = 0x40 | | | | | | | |
| Boil-up setting | 0xB2 | Boil-up setting | unsigned char | 1 byte | – | Set/Get | | | |
| | | Boil-up start = 0x41<br>Boil-up stop/warmer = 0x42 | | | | | | | |
| Boil-up/warmer mode setting | 0xE0 | This property indicates citric acid cleaning, normal warmer or power-saving warmer mode. | unsigned char | 1 byte | – | Set/Get | | | |
| | | Citric acid cleaning = 0x41, normal warmer = 0x42, power-saving warmer = 0x43 | | | | | | | |
| Set value of warmer temperature | 0xE1 | This property indicates set value of warmer temperature in °C. | unsigned char | 1 byte | °C | Set/Get | | | |
| | | 0x00–0x64 (0–100) | | | | | | | |
| Hot water discharge status | 0xE2 | Hot water discharge status | unsigned char | 1 byte | – | Get | | ○ | |
| | | Hot water discharged = 0x41, hot water not discharged = 0x42 | | | | | | | |
| Lock status | 0xE3 | Hot water discharge lock status | unsigned char | 1 byte | – | Get | | | |
| | | Locked = 0x41, unlocked = 0x42 | | | | | | | |

Note: In the “Announcement at status change” column, ○ denotes mandatory processing when the property is implemented.

(1) Operation status (inherited from the device object super class property)

This property indicates whether the function native to this class is operating or not (ON or OFF). In the node mounting this class, if the function of this class starts operating concurrently with the start of node operation, this property may be implemented at a fixed value of 0x30 (operation status ON).

(2) Cover open/close status

This property indicates whether the electric hot water pot (electric thermos) cover is open or



© 2000 - 2023 ECHONET Consortium

closed. The value 0x41 shall be used to indicate that the cover is open. The value 0x42 shall be used to indicate that the cover is closed.

(3) No-water warning

The value of this property shall change from 0x40 to 0x41 when the electric hot water pot is emptied of water. When the electric hot water pot is charged with cold or hot water, the property value shall change from 0x41 to 0x40.

(4) Boil-up setting

Sets the water heating start and water heating stop/warmer states. These two states correspond to the property values 0x41 and 0x42, respectively. The value of this property shall automatically change to 0x42 when the electric hot water pot terminates its water heating operation.

(5) Boil-up/warmer mode setting

This property indicates the water heating/warmer mode setting for the electric hot water pot (citric acid cleaning, normal warmer, or power-saving warmer mode).

The property values 0x41, 0x42, and 0x43 correspond to these operation modes, respectively. For the property values to be implemented, only the property values related to the functions incorporated in the actual device mounting this class need be implemented.

(6) Set value of warmer temperature

This property indicates the set value of warmer temperature in °C.

The property value range shall be 0x00 to 0x64 (0 to 100°C).

(7) Hot water discharge status

This property indicates the hot water discharge status: hot water discharged = 0x41 or hot water not discharged = 0x42. More specifically, the value 0x41 indicates that hot water is being discharged because a hot water discharge procedure is performed by a human, whereas the value 0x42 indicates that no hot water is being discharged.

(8) Lock status

This property indicates whether or not the electric hot water pot (electric thermos) is locked. The value 0x41 indicates that the electric hot water pot is locked. The value 0x42 indicates that the lock is released.



© 2000 - 2023 ECHONET Consortium

## 3．4．2 Requirements for refrigerator class

Class group code : 0x03

Class code : 0xB7

Instance code : 0x01–0x7F (0x00: All-instance specification code)

| Property name | EPC | Contents of property | Data type | Data size | Unit | Access rule | Man-datory | Announce-ment at status change | Remark |
|---|---|---|---|---|---|---|---|---|---|
| | | Value range (decimal notation) | | | | | | | |
| Operation status | 0x80 | This property indicates the ON/OFF status. | unsigned char | 1 byte | — | Set | | ○ | |
| | | ON=0x30, OFF=0x31 | | | | Get | ○ | | |
| Door open/close status | 0xB0 | Door open/close status | unsigned char | 1 byte | – | Get | M | | |
| | | Door open = 0x41, Door close = 0x42 | | | | | | | |
| Door open warning | 0xB1 | Door open warning status | unsigned char | 1 byte | – | Get | | ○ | |
| | | Door open warning found = 0x41<br>Door open warning not found = 0x42 | | | | | | | |
| Refrigerator compartment door status | 0xB2 | Used to acquire the status (i.e. open or closed) of the refrigerator compartment door. | unsigned char | 1 byte | – | Get | | | |
| | | Open = 0x41, closed = 0x42 | | | | | | | |
| Freezer compartment door status | 0xB3 | Used to acquire the status (i.e. open or closed) of the freezer compartment door. | unsigned char | 1 byte | – | Get | | | |
| | | Open = 0x41, closed = 0x42 | | | | | | | |
| Ice compartment door status | 0xB4 | Used to acquire the status (i.e. open or closed) of the ice compartment door. | unsigned char | 1 byte | – | Get | | | |
| | | Open = 0x41, closed = 0x42 | | | | | | | |
| Vegetable compartment door status | 0xB5 | Used to acquire the status (i.e. open or closed) of the vegetable compartment door. | unsigned char | 1 byte | – | Get | | | |
| | | Open = 0x41, closed = 0x42 | | | | | | | |
| Multi-refrigera-ting mode compartment door status | 0xB6 | Used to acquire the status (i.e. open or closed) of the multi-refrigerating mode compartment door. | unsigned char | 1 byte | – | Get | | | |
| | | Open = 0x41, closed = 0x42 | | | | | | | |
| Maximum allowable temperature setting level | 0xE0 | Used to acquire the maximum allowable temperature setting levels for the individual compartments of the refrigerator. | unsigned char × 8 | 8 bytes | – | Get | | | |
| | | First byte: Refrigerator compartment<br>Second byte: Freezer compartment<br>Third byte: Ice compartment<br>Fourth byte: Vegetable compartment<br>Fifth byte: Multi-refrigerating mode compartment<br>Sixth to eighth bytes: Reserved for future use.<br>0x01–0xFF (Level 1–255)<br>0x00 = no compartment | | | | | | | |



© 2000 - 2023 ECHONET Consortium

| | | | | | | | | | |
|---|---|---|---|---|---|---|---|---|---|
| Refrigerator compartment temperature setting | 0xE2 | Used to specify the refrigerator compartment temperature in °C, and to acquire the current setting.<br>0x81–0x7E (-127–126°C) | signed char | 1 byte | °C | Set/Get | | | |
| Freezer compartment temperature setting | 0xE3 | Used to specify the freezer compartment temperature in °C, and to acquire the current setting.<br>0x81–0x7E (-127–126°C) | signed char | 1 byte | °C | Set/Get | | | |
| Ice compartment temperature setting | 0xE4 | Used to specify the ice compartment temperature in °C, and to acquire the current setting.<br>0x81–0x7E (-127–126°C) | signed char | 1 byte | °C | Set/Get | | | |
| Vegetable compartment temperature setting | 0xE5 | Used to specify the vegetable compartment temperature in °C, and to acquire the current setting.<br>0x81–0x7E (-127–126°C) | signed char | 1 byte | °C | Set/Get | | | |
| Multi-refrigera-ting mode compartment temperature setting | 0xE6 | Used to specify the multi-refrigerating mode compartment temperature in °C, and to acquire the current setting.<br>0x81–0x7E (-127–126°C) | signed char | 1 byte | °C | Set/Get | | | |
| Refrigerator compartment temperature level setting | 0xE9 | Used to specify the refrigerator compartment temperature by selecting a level from among the predefined levels, and to acquire the current setting.<br>0x01 to maximum allowable temperature setting level (highest to lowest temperature) | unsigned char | 1 byte | — | Set/Get | | | |
| Freezer compartment temperature level setting | 0xEA | Used to specify the freezer compartment temperature by selecting a level from among the predefined levels, and to acquire the current setting.<br>0x01 to maximum allowable temperature setting level (highest to lowest temperature) | unsigned char | 1 byte | — | Set/Get | | | |
| Ice compartment temperature level setting | 0xEB | Used to specify ice compartment temperature by selecting a level from among the predefined levels, and to acquire the current setting.<br>0x01 to maximum allowable temperature setting level (highest to lowest temperature) | unsigned char | 1 byte | — | Set/Get | | | |
| Vegetable compartment temperature level setting | 0xEC | Used to specify the vegetable compartment temperature by selecting a level from among the predefined levels, and to acquire the current setting.<br>0x01 to maximum allowable temperature setting level (highest to lowest temperature) | unsigned char | 1 byte | — | Set/Get | | | |
| Multi-refrigera-ting mode compartment temperature level setting | 0xED | Used to specify the multi-refrigerating mode compartment temperature by selecting a level from among the predefined levels, and to acquire the current setting. | unsigned char | 1 byte | — | Set/Get | | | |



© 2000 - 2023 ECHONET Consortium

| | | | | | | | | | |
|---|---|---|---|---|---|---|---|---|---|
| | | 0x01 to maximum allowable temperature setting level (highest to lowest temperature) | | | | | | | |
| Measured refrigerator compartment temperature | 0xD1 | Used to acquire the measured refrigerator compartment temperature (°C).<br>0x81–0x7E (-127–126°C) | signed char | 1 byte | °C | Get | | | |
| Measured freezer compartment temperature | 0xD2 | Used to acquire the measured freezer compartment temperature (°C).<br>0x81–0x7E (-127–126°C) | signed char | 1 byte | °C | Get | | | |
| Measured ice compartment temperature | 0xD3 | Used to acquire the measured ice compartment temperature (°C).<br>0x81–0x7E (-127–126°C) | signed char | 1 byte | °C | Get | | | |
| Measured vegetable compartment temperature | 0xD4 | Used to acquire the measured vegetable compartment temperature (°C).<br>0x81–0x7E (-127–126°C) | signed char | 1 byte | °C | Get | | | |
| Measured multi-refrigerating mode compartment temperature | 0xD5 | Used to acquire the measured multi-refrigerating mode compartment temperature (°C).<br>0x81–0x7E (-127–126°C) | signed char | 1 byte | °C | Get | | | |
| Compressor rotation speed | 0xD8 | Used to acquire the rotation speed of the compressor. The rotation speed is expressed in terms of a level.<br>First byte: Maximum rotation speed L (0x01–0xFF (1–255))<br>Second byte: Rotation speed of the actual compressor:<br>0x00 to L (zero speed to highest speed) | unsigned char | 2 bytes | — | Get | | | |
| Measured electric current consumption | 0xDA | Used to acquire the measured electric current consumption.<br>0x0000–0xFFFD (0–6553.3A) | unsigned char | 2 bytes | 0.1A | Get | | | |
| Rated power consumption | 0xDC | Used to acquire the rated power consumption.<br>0x0000–0xFFFD (0–65533W) | unsigned char | 2 bytes | W | Get | | | |
| Quick freeze function setting | 0xA0 | Used to specify whether or not to use the “Quick freeze” function of the refrigerator, and to acquire the current setting.<br>“Normal operation” mode: 0x41<br>“Quick freeze” mode: 0x42<br>“Standby for fast freezing” mode: 0x43 | unsigned char | 1 byte | — | Set/Get | | | |
| Quick refrigeration function setting | 0xA1 | Used to specify whether or not to use the “quick refrigeration” function of the refrigerator, and to acquire the current setting.<br>“Normal operation” mode: 0x41<br>“Quick refrigeration” mode: 0x42<br>“Standby for quick refrigeration” mode: 0x43 | unsigned char | 1 byte | — | Set/Get | | | |



© 2000 - 2023 ECHONET Consortium

| | | | | | | | | | |
|---|---|---|---|---|---|---|---|---|---|
| Icemaker setting | 0xA4 | Used to specify whether or not to enable the automatic icemaker of the refrigerator, and to acquire the current setting.<br>“Enable icemaker” option: 0x41<br>“Disable icemaker” option: 0x42<br>“Temporarily disable icemaker” option: 0x43 | unsigned char | 1 byte | — | Set/Get | | | |
| Icemaker operation status | 0xA5 | Used to acquire the status of the automatic icemaker of the refrigerator.<br>“Ice-making in progress” state: 0x41<br>“Ice-making stopped” state: 0x42 | unsigned char | 1 byte | — | Get | | | |
| Icemaker tank status | 0xA6 | Used to acquire the status of the tank of the automatic icemaker of the refrigerator in terms of whether it contains water or not.<br>Icemaker tank contains water: 0x41<br>There is no water left in the icemaker tank or the icemaker tank has not been positioned correctly in the refrigerator: 0x42 | unsigned char | 1 byte | — | Get | | | |
| Refrigerator compartment humidification function setting | 0xA8 | Used to specify whether or not to use the refrigerator compartment humidification function, and to acquire the current setting.<br>ON = 0x41<br>OFF = 0x42 | unsigned char | 1 byte | — | Set/Get | | | |
| Vegetable compartment humidification function setting | 0xA9 | Used to specify whether or not to use the vegetable compartment humidification function, and to acquire the current setting.<br>ON = 0x41<br>OFF = 0x42 | unsigned char | 1 byte | — | Set/Get | | | |
| Deodorization function setting | 0xAD | Used to specify whether or not to use the deodorization function of the refrigerator, and to acquire the current setting.<br>ON = 0x41<br>OFF = 0x42 | unsigned char | 1 byte | — | Set/Get | | | |

Note: In the “Announcement at status change” column, ○ denotes mandatory processing when the property is implemented.

(1) Operation status (inherited from the device object super class property)

Operation status property specifies the operation status (i.e. ON or OFF) of the refrigerator and freezer, and to acquire the current setting. In cases where the refrigerator and freezer belong to a node in which the “refrigerator and freezer” class is implemented and the refrigerator and freezer start operating as soon as the node starts up, 0x30 may be implemented as the fixed value.

(2) Door open/close status

Door open/close status property specifies the status (i.e. open or closed) of the door. 0x41 and 0x42 shall be used for the “open” and “closed” states, respectively. In cases where the refrigerator has



© 2000 - 2023 ECHONET Consortium

two or more doors, 0x42 shall be used when any of the doors are open. For the purposes of this paragraph, the term “door” shall refer to both any door and any drawer.

(3) Door open warning

Door open warning property specifies the information as to whether or not the “door open” alarm has gone off. 0x41 and 0x42 shall be used for the “alarm activated” and “alarm not activated” states, respectively.

(4) Refrigerator compartment door status

Refrigerator compartment door status property specifies the status (i.e. open or closed) of the refrigerator compartment door. 0x41 and 0x42 shall be used for the “open” and “closed” states, respectively. In cases where the refrigerator compartment has two or more doors, 0x42 shall be used when any of the doors are open. For the purposes of this paragraph, the term “door” shall refer to both any door and any drawer.

(5) Freezer compartment door status

Freezer compartment door status property specifies the status (i.e. open or closed) of the freezer compartment door. 0x41 and 0x42 shall be used for the “open” and “closed” states, respectively. In cases where the freezer compartment has two or more doors, 0x42 shall be used when any of the doors are open. For the purposes of this paragraph, the term “door” shall refer to both any door and any drawer.

(6) Ice compartment door status

Ice compartment door status property specifies the status (i.e. open or closed) of the ice compartment door. 0x41 and 0x42 shall be used for the “open” and “closed” states, respectively. In cases where the ice compartment has two or more doors, 0x42 shall be used when any of the doors are open. For the purposes of this paragraph, the term “door” shall refer to both any door and any drawer.

(7) Vegetable compartment door status

Vegetable compartment door status property specifies the status (i.e. open or closed) of the vegetable compartment door. 0x41 and 0x42 shall be used for the “open” and “closed” states, respectively. In cases where the vegetable compartment has two or more doors, 0x42 shall be used when any of the doors are open. For the purposes of this paragraph, the term “door” shall refer to both any door and any drawer.

(8) Multi-refrigerating mode compartment door status

Multi-refrigerating mode compartment door status property specifies the status (i.e. open or closed) of the multi-refrigerating mode compartment door. 0x41 and 0x42 shall be used for the “open” and “closed” states, respectively. In cases where the multi-refrigerating mode compartment has two or



© 2000 - 2023 ECHONET Consortium

more doors, 0x42 shall be used when any of the doors are open. For the purposes of this paragraph, the term “door” shall refer to both any door and any drawer.

(9) Maximum allowable temperature setting level

Maximum allowable temperature setting level property specifies the maximum allowable temperature setting levels for the individual compartments of the refrigerator. The data size shall be 8 bytes, and the maximum allowable temperature setting level for each compartment shall be indicated using one byte (255 levels (0x01 to 0xFF)). The first to fifth bytes shall be used for the refrigerator, freezer, ice, vegetable and multi-refrigerating mode compartments, respectively. The sixth to eighth bytes are reserved for future use. When the refrigerator does not have one or more of the five types of compartments, 0x00 shall be used for the types of compartments the refrigerator is not equipped with.

(10) Refrigerator compartment temperature setting

Refrigerator compartment temperature setting property specifies the refrigerator compartment temperature in °C, and to acquire the current setting. The property value range shall be 0x81 to 0x7E (-127 to 126°C). When the property value of the actual piece of equipment is higher than the upper limit of the property value range, the overflow code 0x7F shall be used. When the property value is lower than the lower limit of the property value range, the underflow code 0x80 shall be used. It is only required to implement the property values that are supported by the actual piece of equipment in which this class is implemented. In cases where both the “refrigerator compartment temperature setting” property and the “refrigerator compartment temperature level setting” property (EPC = 0xE9) are implemented, the property values shall be correlated.

(11) Freezer compartment temperature setting

Freezer compartment temperature setting property specifies the freezer compartment temperature in °C, and to acquire the current setting. The property value range shall be 0x81 to 0x7E (-127 to 126°C). When the property value of the actual piece of equipment is higher than the upper limit of the property value range, the overflow code 0x7F shall be used. When the property value is lower than the lower limit of the property value range, the underflow code 0x80 shall be used. It is only required to implement the property values that are supported by the actual piece of equipment in which this class is implemented. In cases where both the “freezer compartment temperature setting” property and the “freezer compartment temperature level setting” property (EPC = 0xEA) are implemented, the property values shall be correlated.

(12) Ice compartment temperature setting

Ice compartment temperature setting property specifies the ice compartment temperature in °C, and to acquire the current setting. The property value range shall be 0x81 to 0x7E (-127 to 126°C). When the property value of the actual piece of equipment is higher than the upper limit of the property value range, the overflow code 0x7F shall be used. When the property value is lower than



© 2000 - 2023 ECHONET Consortium

the lower limit of the property value range, the underflow code 0x80 shall be used. It is only required to implement the property values that are supported by the actual piece of equipment in which this class is implemented. In cases where both the “ice compartment temperature setting” property and the “ice compartment temperature level setting” property (EPC = 0xEB) are implemented, the property values shall be correlated.

(13) Vegetable compartment temperature setting

Vegetable compartment temperature setting property specifies the vegetable compartment temperature in °C, and to acquire the current setting. The property value range shall be 0x81 to 0x7E (-127 to 126°C). When the property value of the actual piece of equipment is higher than the upper limit of the property value range, the overflow code 0x7F shall be used. When the property value is lower than the lower limit of the property value range, the underflow code 0x80 shall be used. It is only required to implement the property values that are supported by the actual piece of equipment in which this class is implemented. In cases where both the “vegetable compartment temperature setting” property and the “vegetable compartment temperature level setting” property (EPC = 0xEC) are implemented, the property values shall be correlated.

(14) Multi-refrigerating mode compartment temperature setting

Multi-refrigerating mode compartment temperature setting property specifies the multi-refrigerating mode compartment temperature in °C, and to acquire the current setting. The property value range shall be 0x81 to 0x7E (-127 to 126°C). When the property value of the actual piece of equipment is higher than the upper limit of the property value range, the overflow code 0x7F shall be used. When the property value is lower than the lower limit of the property value range, the underflow code 0x80 shall be used. It is only required to implement the property values that are supported by the actual piece of equipment in which this class is implemented. In cases where both the “multi-refrigerating mode compartment temperature setting” property and the “multi-refrigerating mode compartment temperature level setting” property (EPC = 0xED) are implemented, the property values shall be correlated.

(15) Refrigerator compartment temperature level setting

Refrigerator compartment temperature level setting property specifies the refrigerator compartment temperature by selecting a level from among the predefined levels, and to acquire the current setting. The maximum allowable temperature setting level shall be acquired with the “maximum allowable temperature setting level” property (EPC = 0xE0). The temperature values for the levels may be defined freely, as long as the smallest to largest temperature level values are used for the highest to lowest temperature values, respectively. It is only required to implement the property values that are supported by the actual piece of equipment in which this class is implemented. In cases where both the “refrigerator compartment temperature level setting” property and the “refrigerator compartment temperature setting” property (EPC = 0xE2) are implemented, the property values shall be correlated. Implementation of this property must be accompanied by the implementation of the “maximum allowable temperature setting level” property (0xE0).



© 2000 - 2023 ECHONET Consortium

(16) Freezer compartment temperature level setting

Freezer compartment temperature level setting property specifies the freezer compartment temperature by selecting a level from among the predefined levels, and to acquire the current setting. The maximum allowable temperature setting level shall be acquired with the “maximum allowable temperature setting level” property (EPC = 0xE0). The temperature values for the levels may be defined freely, as long as the smallest to largest temperature level values are used for the highest to lowest temperature values, respectively. It is only required to implement the property values that are supported by the actual piece of equipment in which this class is implemented. In cases where both the “freezer compartment temperature level setting” property and the “freezer compartment temperature setting” property (EPC = 0xE3) are implemented, the property values shall be correlated. Implementation of this property must be accompanied by the implementation of the “maximum allowable temperature setting level” property (0xE0).

(17) Ice compartment temperature level setting

Ice compartment temperature level setting property specifies the ice compartment temperature by selecting a level from among the predefined levels, and to acquire the current setting. The maximum allowable temperature setting level shall be acquired with the “maximum allowable temperature setting level” property (EPC = 0xE0). The temperature values for the levels may be defined freely, as long as the smallest to largest temperature level values are used for the highest to lowest temperature values, respectively. It is only required to implement the property values that are supported by the actual piece of equipment in which this class is implemented. In cases where both the “ice compartment temperature level setting” property and the “ice compartment temperature setting” property (EPC = 0xE4) are implemented, the property values shall be correlated. Implementation of this property must be accompanied by the implementation of the “maximum allowable temperature setting level” property (0xE0).

(18) Vegetable compartment temperature level setting

Vegetable compartment temperature level setting property specifies the vegetable compartment temperature by selecting a level from among the predefined levels, and to acquire the current setting. The maximum allowable temperature setting level shall be acquired with the “maximum allowable temperature setting level” property (EPC = 0xE0). The temperature values for the levels may be defined freely, as long as the smallest to largest temperature level values are used for the highest to lowest temperature values, respectively. It is only required to implement the property values that are supported by the actual piece of equipment in which this class is implemented.

In cases where both the “vegetable compartment temperature level setting” property and the “vegetable compartment temperature setting” property (EPC = 0xE5) are implemented, the property values shall be correlated. Implementation of this property must be accompanied by the implementation of the “maximum allowable temperature setting level” property (0xE0).

(19) Multi-refrigerating mode compartment temperature level setting



© 2000 - 2023 ECHONET Consortium

Multi-refrigerating mode compartment temperature level setting property specifies the multi-refrigerating mode compartment temperature by selecting a level from among the predefined levels, and to acquire the current setting. The maximum allowable temperature setting level shall be acquired with the “maximum allowable temperature setting level” property (EPC = 0xE0). The temperature values for the levels may be defined freely, as long as the smallest to largest temperature level values are used for the highest to lowest temperature values, respectively. It is only required to implement the property values that are supported by the actual piece of equipment in which this class is implemented.

In cases where both the “multi-refrigerating mode compartment temperature level setting” property and the “multi-refrigerating mode compartment temperature setting” property (EPC = 0xE6) are implemented, the property values shall be correlated. Implementation of this property must be accompanied by the implementation of the “maximum allowable temperature setting level” property (0xE0).

(20) Measured refrigerator compartment temperature

Measured refrigerator compartment temperature property specifies the measured refrigerator compartment temperature (°C). The property value range shall be 0x81 to 0x7E (-127 to 126°C). When the property value of the actual piece of equipment is higher than the upper limit of the property value range, the overflow code 0x7F shall be used. When the property value is lower than the lower limit of the property value range, the underflow code 0x80 shall be used.

(21) Measured freezer compartment temperature

Measured freezer compartment temperature property specifies the measured freezer compartment temperature (°C). The property value range shall be 0x81 to 0x7E (-127 to 126°C). When the property value of the actual piece of equipment is higher than the upper limit of the property value range, the overflow code 0x7F shall be used. When the property value is lower than the lower limit of the property value range, the underflow code 0x80 shall be used.

(22) Measured ice compartment temperature

Measured ice compartment temperature property specifies the measured meat and fish compartment temperature (°C). The property value range shall be 0x81 to 0x7E (-127 to 126°C). When the property value of the actual piece of equipment is higher than the upper limit of the property value range, the overflow code 0x7F shall be used. When the property value is lower than the lower limit of the property value range, the underflow code 0x80 shall be used.

(23) Measured vegetable compartment temperature

Measured vegetable compartment temperature property specifies the measured vegetable compartment temperature (°C). The property value range shall be 0x81 to 0x7E (-127 to 126°C). When the property value of the actual piece of equipment is higher than the upper limit of the property value range, the overflow code 0x7F shall be used. When the property value is lower than



© 2000 - 2023 ECHONET Consortium

the lower limit of the property value range, the underflow code 0x80 shall be used.

(24) Measured multi-refrigerating mode compartment temperature

Measured multi-refrigerating mode compartment temperature property specifies the measured multi-refrigerating mode compartment temperature (°C). The property value range shall be 0x81 to 0x7E (-127 to 126°C). When the property value of the actual piece of equipment is higher than the upper limit of the property value range, the overflow code 0x7F shall be used. When the property value is lower than the lower limit of the property value range, the underflow code 0x80 shall be used.

(25) Compressor rotation speed

Compressor rotation speed property specifies the rotation speed of the compressor. The rotation speed is expressed in terms of levels. The first and second bytes shall indicate the maximum acquirable rotation speed and the rotation speed of the actual compressor, respectively. The maximum acquirable rotation speed is also expressed in terms of levels. The rotation speed values for the levels may be defined freely, as long as the smallest to largest level values are used for the lowest to highest speed values, respectively, with 0x00 used for zero speed. The property value range shall be as defined by the following equation:

“Value of the first byte” ≥ “Value of the second byte”

(26) Measured electric current consumption

Measured electric current consumption property specifies the present measured electric current consumption (expressed in increments of 0.1A) of the refrigerator and freezer. When the measured electric current is alternating current, the effective value shall be indicated. The property value range shall be 0x0000 to 0xFFFD (0 to 6553.3A). When the property value of the actual piece of equipment is higher than the upper limit of the property value range, the overflow code 0xFFFF shall be used. When the property value is lower than the lower limit of the property value range, the underflow code 0xFFFE shall be used.

(27) Rated power consumption

Used to acquire the rated power consumption (W; brochure value). The property value range shall be 0x0000 to 0xFFFD (0 to 65533W).

(28) Quick freeze function setting

Quick freeze function setting property specifies whether or not to use the “quick freeze” function of the refrigerator, and to acquire the current setting. 0x41, 0x42 and 0x43 shall be used for the “normal operation,” “quick freeze” and “standby for quick freezing” modes, respectively. The “standby for quick freezing” mode (0x43) shall mean a mode in which the refrigerator is standing by to shift to the “quick freeze” mode because a defrosting cycle is being performed or a condition must be satisfied before the refrigerator can shift to the “quick freeze” mode (0x42) (the



© 2000 - 2023 ECHONET Consortium

refrigerator will shift to the “quick freeze” mode as soon as the defrosting cycle is completed or the condition is satisfied). The property value will change to 0x41 as soon as the quick freeze cycle is completed. The property value may be ignored when it is 0x43. It is only required to implement the property values that are supported by the actual piece of equipment in which this class is implemented.

(29) Quick refrigeration function setting

Quick refrigeration function setting property specifies whether or not to use the “quick refrigeration” function of the refrigerator, and to acquire the current setting. 0x41, 0x42 and 0x43 shall be used for the “normal operation,” “quick refrigeration” and “standby for quick refrigeration” modes, respectively. The “standby for quick refrigeration” mode (0x43) shall mean a mode in which the refrigerator is standing by to shift to the “quick refrigeration” mode because a defrosting cycle is being performed or a condition must be satisfied before the refrigerator can shift to the “quick refrigeration” mode (0x42) (the refrigerator will shift to the “quick refrigeration” mode as soon as the defrosting cycle is completed or the condition is satisfied). The property value will change to 0x41 as soon as the quick refrigeration cycle is completed. The property value may be ignored when it is 0x43. It is only required to implement the property values that are supported by the actual piece of equipment in which this class is implemented.

(30) Icemaker setting

Icemaker setting property specifies whether or not to enable the automatic icemaker of the refrigerator, and to acquire the current setting. 0x41, 0x42 and 0x43 shall be used for the “enable icemaker,” “disable icemaker” and “temporarily disable icemaker” options, respectively. The “temporarily disable icemaker” option is used to disable the icemaker temporarily when the user does not want to have the icemaker make ice, such as during the small hours of the night and during a vacation. The condition for a shift back from the “disable icemaker” or “temporarily disable icemaker” option to the “enable icemaker” option shall be equipment-dependent and is not specified in this ECHONET Specification. It is only required to implement the property values that are supported by the actual piece of equipment in which this class is implemented.

(31) Icemaker operation status

Icemaker operation status property specifies the status of the automatic icemaker of the refrigerator. 0x41 and 0x42 shall be used for the “ice-making in progress” and “ice-making stopped” states, respectively.

(32) Icemaker tank status

Icemaker tank status property specifies the status of the tank of the automatic icemaker of the refrigerator in terms of whether it contains water or not. When the icemaker tank contains water, the property value shall be 0x41. When there is no water left in the icemaker tank or when the icemaker tank has not been positioned correctly in the refrigerator, the property value shall be



© 2000 - 2023 ECHONET Consortium

0x42.

(33) Refrigerator compartment humidification function setting

Refrigerator compartment humidification function setting property specifies whether or not to use the refrigerator compartment humidification function, and to acquire the current setting. 0x41 and 0x42 shall be used for the “ON” and “OFF” states, respectively.

(34) Vegetable compartment humidification function setting

Vegetable compartment humidification function setting property specifies whether or not to use the vegetable compartment humidification function, and to acquire the current setting. 0x41 and 0x42 shall be used for the “ON” and “OFF” states, respectively.

(35) Deodorization function setting

Deodorization function setting property specifies whether or not to use the deodorization function of the refrigerator, and to acquire the current setting. 0x41 and 0x42 shall be used for the “ON” and “OFF” states, respectively.



© 2000 - 2023 ECHONET Consortium

## 3．4．3 Requirements for combination microwave oven (electronic oven) class

Class group code : 0x03

Class code : 0xB8

Instance code : 0x01–0x7F (0x00: All-instance specification code)

| Property name | EPC | Contents of property<br>Value range (decimal notation) | Data type | Data size | Unit | Access rule | Man-datory | Announce-ment at status change | Remark |
|---|---|---|---|---|---|---|---|---|---|
| Operation status | 0x80 | This property indicates the ON/OFF status.<br>ON=0x30, OFF=0x31 | unsigned char | 1 byte | — | Set<br>Get | <br>○ | ○ | |
| Door open/close status | 0xB0 | Used to acquire the status (i.e. open or closed) of the door of the combination microwave oven.<br>Door open = 0x41, door closed = 0x42 | unsigned char | 1 byte | – | Get | | | |
| Heating status | 0xB1 | Used to acquire the status of the combination microwave oven.<br>Initial state = 0x40<br>Heating = 0x41<br>Heating suspended = 0x42<br>Reporting completion of heating cycle = 0x43<br>Setting = 0x44<br>Preheating = 0x45<br>Preheat temperature maintenance = 0x46<br>Heating temporarily stopped for manual cooking action = 0x47 | unsigned char | 1 byte | – | Get | | | |
| Heating setting | 0xB2 | Used to specify whether to start, stop or suspend heating, and to acquire the current setting (i.e. current heating status).<br>Start/restart heating (heating started/restarted) = 0x41<br>Suspend heating (heating suspended) = 0x42<br>Stop heating (heating stopped) = 0x43 | unsigned char | 1 byte | – | Set/Get | | | |
| Heating mode setting | 0xE0 | Used to specify the heating mode of the combination microwave oven, and to acquire the current setting (i.e. current mode).<br>Microwave heating = 0x41<br>Defrosting = 0x42<br>Oven = 0x43<br>Grill = 0x44<br>Toaster = 0x45<br>Fermenting = 0x46<br>Stewing = 0x47<br>Steaming = 0x48<br>Two-stage microwave heating = 0x51<br>No mode specified = 0xFF | unsigned char | 1 byte | – | Set/Get | | | |



© 2000 - 2023 ECHONET Consortium

| | | | | | | | | | |
|---|---|---|---|---|---|---|---|---|---|
| Automatic heating setting | 0xE1 | Used to specify whether or not to use the combination microwave oven's automatic heating mode, and to acquire the current setting.<br>Automatic = 0x41<br>Manual = 0x42<br>Not specified = 0xFF | unsigned char | 1 byte | – | Set/Get | | | |
| Automatic heating level setting | 0xE2 | Used to specify, by selecting a level from among the five predefined levels, the level of automatic heating for the option specified by the "automatic heating menu setting" property, and to acquire the current setting.<br>0x31–0x35 (lowest to highest)<br>Not specified = 0xFF | unsigned cha | 1 byte | – | Set/Get | | | |
| Automatic heating menu setting | 0xD0 | Used, when the value of the "automatic heating setting" property is 0x41 (= automatic heating), to select an automatic heating cycle, and to acquire the current setting.<br>0 to 0xFE: Automatic heating cycle code (See the automatic heating cycle code table in the subsection entitled "Automatic heating menu setting.")<br>No automatic heating cycle specified = 0xFF | unsigned cha | 1 byte | – | Set/Get | | | |
| Oven mode setting | 0xD1 | Used, when the value of the "heating mode setting" property (EPC = 0xE0) is 0x43 (= oven), to specify the sub-mode to use, and to acquire the current setting.<br>Automatic selection mode = 0x40<br>Convection oven mode = 0x41<br>Circulation oven mode = 0x42<br>Hybrid oven mode = 0x43<br>No sub-mode specified = 0xFF | unsigned cha | 1 byte | – | Set/Get | | | |
| Oven preheating setting | 0xD5 | Used, when the value of the "heating mode setting" property (EPC = 0xE0) is 0x43 (oven), to specify whether or not to preheat the chamber for the selected oven sub-mode, and to acquire the current setting.<br>With preheating = 0x41<br>Without preheating = 0x42<br>Not specified = 0xFF | unsigned char | 1 byte | – | Set/Get | | | |
| Fermenting mode setting | 0xD6 | Used, when the value of the "heating mode setting" property (EPC = 0xE0) is 0x46 (= fermenting), to specify the sub-mode to use, and to acquire the current setting.<br>Automatic selection mode = 0x40<br>Convection fermentation mode = 0x41<br>Circulation fermentation mode = 0x42<br>Hybrid fermentation mode = 0x43<br>Microwave fermentation mode = 0x51<br>No mode specified = 0xFF | unsigned char | 1 byte | – | Set/Get | | | |
| Chamber temperature setting | 0xE3 | Used, when the value of the "heating mode setting" property (EPC = 0xE0) is 0x43 (= oven) or 0x46 (= fermenting), to specify the temperature in the chamber in 0.1°C increments, and to acquire the current setting. | signed short | 2 bytes | 0.1°C | Set/Get | | | |



© 2000 - 2023 ECHONET Consortium

| | | | | | | | | | |
|---|---|---|---|---|---|---|---|---|---|
| | | 0xF554–0x7FFE (-273.2– 3276.6°C)<br>0x8001: Automatic<br>0x8002: Not specified | | | | | | | |
| Food temperature setting | 0xE4 | Used to specify the as-heated food temperature in 0.1°C increments, and to acquire the current setting.<br>0xF554–0x7FFE (-273.2–3276.6°C)<br>0x8002: Not specified | signed short | 2 bytes | 0.1°C | Set/Get | | | |
| Heating time setting | 0xE5 | Used to specify the duration of heating in the HH:MM:SS format, and to acquire the current setting.<br>0–0x17: 0–0x3B: 0–0x3B<br>(= 0–23) (= 0–59) (= 0–59) | unsigned char × 3 | 3 bytes | — | Set/Get | | | |
| Remaining heating time setting | 0xE6 | Used to specify the time remaining to complete the heating cycle in the HH:MM:SS format, and to acquire the current setting.<br>0–0x17: 0–0x3B: 0–0x3B<br>(= 0–23) (= 0–59) (= 0–59) | unsigned char × 3 | 3 bytes | — | Set/Get | | | |
| Microwave heating power setting | 0xE7 | Used, when the value of the “heating mode setting” property (EPC = 0xE0) is 0x41 (= microwave heating), 0x42 (= defrosting), 0x47 (= stewing) or 0x48 (= steaming) or when the value of the “heating mode setting” property (EPC = 0xE0) is 0x46 (= fermenting) and the value of the “fermenting mode setting” property (EPC = 0xD6) is 0x51 (= microwave fermentation mode), to specify the microwave heating power in 1W increments, and to acquire the current setting.<br>0x0000–0xFFFD (0–65533W) | unsigned short | 2 bytes | 1 W | Set/Get | | | |
| Prompt message setting | 0xE8 | Used, when it is necessary to instruct the combination microwave oven to temporarily stop heating at a point during a heating cycle to allow the user to perform manual reversing, mixing, etc. and display a message to instruct the user on the manual action to be performed, to specify the prompt message to be displayed and the timing of the message (in terms of a percentage of the total duration of the heating cycle that is allowed to elapse (from the start of the heating cycle) before the message is displayed), and to acquire the current settings. Up to 4 messages may be specified.<br>First byte: Prompt message code (See the prompt message code table in the subsection entitled “Prompt message setting.”)<br>Second byte: Timing value (0–0x64) (0–100%)) | unsigned char × 2 × 4 | 8 bytes | — | Set/Get | | | |
| Accessories to combination microwave oven setting | 0xE9 | Used to specify, by means of a 2-byte bit map, what accessory or accessories to the combination microwave oven to use, and to acquire the current setting. | unsigned short | 2 bytes | — | Set/Get | | | |



© 2000 - 2023 ECHONET Consortium

| | | | | | | | | | |
|---|---|---|---|---|---|---|---|---|---|
| | | The value contained in a bit in the bit map shall be "1" if the accessory represented by that bit is used and "0" if the accessory represented by that bit is not used (See the bitmap composition table in the subsection entitled "'Accessories to combination microwave oven' setting"). | | | | | | | |
| Display character string setting | 0xEA | Used to input character strings (up to 20 characters) to use on the display of the combination microwave oven.<br>Shift-JIS code characters × 20 | unsigned short × 20 | 40 bytes | — | Set | | | |
| Two-stage microwave heating setting (duration) | 0xEB | Used, when the value of the "heating mode setting" property (EPC = 0xE0) is 0x51 (two-stage microwave heating), to specify the duration of the first and second microwave heating cycles in the HH:MM:SS format, and to acquire the current setting. Three bytes shall be used for each heating cycle, with the first and second sets of bytes used for the first and second heating cycles, respectively.<br>Duration of first microwave heating cycle (first through third bytes):<br>0–0x17: 0–0x3B: 0–0x3B<br>(= 0–23): (= 0–59): (= 0–59)<br>Duration of second microwave heating cycle (fourth through sixth bytes):<br>0–0x17: 0–0x3B: 0–0x3B<br>(= 0–23): (= 0–59): (= 0–59) | unsigned char × 3 × 2 | 6 bytes | — | Set/Get | | | |
| Two-stage microwave heating setting (heating power) | 0xEC | Used, when the value of the "heating mode setting" property (EPC = 0xE0) is 0x51 (two-stage microwave heating), to specify the heating power for the first and second microwave heating cycles in 1W increments, and to acquire the current setting. Two bytes shall be used for each heating cycle, with the first and second pairs of bytes used for the first and second heating cycles, respectively.<br>Heating power for first microwave heating cycle (first and second bytes):<br>0x0000–0xFFFD (0–65533W)<br>Heating power for second microwave heating cycle (third and fourth bytes):<br>0x0000–0xFFFD (0–65533W) | unsigned short × 2 | 4 bytes | 1 W | Set/Get | | | |

Note: In the "Announcement at status change" column, ○ denotes mandatory processing when the property is implemented.

(1) Operation status (inherited from the device object super class property)

Operation status property specifies whether to place the combination microwave oven into the ON state (i.e. a state in which the combination microwave oven is operating in one of its heating modes or is waiting for a user operation using one of its heating modes) or OFF state, and to acquire the current setting. 0x30 and 0x31 shall be used for the ON and OFF states, respectively. In cases where the combination microwave oven belongs to a node in which the "combination microwave oven" class is implemented and it starts operating in one of its heating modes or is ready to respond to user operation as soon as the node starts up, 0x30 may be implemented as the fixed value.



© 2000 - 2023 ECHONET Consortium

(2) Door open/close status

Door open/close status property specifies the status (i.e. open or closed) of the door of the combination microwave oven. 0x41 shall be used for the “open” state and 0x42 shall be used for the “closed” state.

(3) Heating status

Heating status property specifies the status of the combination microwave oven. The following property values shall be used:

Initial state (a state in which no setting has been made or the combination microwave oven is not heating anything): 0x40

Heating: 0x41

Heating suspended (a state in which the combination microwave oven is operating but the current heating cycle has been suspended): 0x42

Reporting completion of heating cycle (a state in which the specified heating cycle has been completed and the combination microwave oven is in the process of shifting to the initial state): 0x43

Setting (a state in which the heating mode, heating time, heating temperature, etc. are being set): 0x44

Preheating (a state in which a preheating cycle is being performed for an oven function-based heating cycle): 0x45

Preheat temperature maintenance (a state in which the preheat temperature achieved for an oven function-based heating cycle is being maintained): 0x46

Heating temporarily stopped for manual cooking action (a state in which heating has been temporarily stopped during a heating cycle to allow the user to perform manual reversing, mixing, etc. and a message is displayed to instruct the user on the manual action to be performed): 0x47

This property indicates the current heating status in more detail than the “heating setting” property (Get) (EPC = 0xB2). The relationship between the property values of this property and the property values of the “heating setting” property (Get) are as follows:

| This property | Related property |
|---|---|
| “Heating status” property (Get) (EPC = 0xB1) | “Heating setting” property (Get) (EPC = 0xB2) |
| Heating: 0x41 | Heating started/resumed: 0x41 |
| Preheating: 0x45 | |
| Preheat temperature maintenance: 0x46 | |
| Heating suspended: 0x42 | Heating suspended: 0x42 |
| Heating temporarily stopped for manual cooking action: 0x47 | |
| Initial state: 0x40 | Heating stopped: 0x43 |
| Reporting completion of heating cycle: 0x43 | |
| Setting: 0x44 | |



© 2000 - 2023 ECHONET Consortium

(4) Heating setting

Heating setting property specifies whether to start, stop or suspend heating. 0x41, 0x42 and 0x43 shall be used for the “start/restart heating (heating started/restarted),” “suspend heating (heating suspended)” and “stop heating (heating stopped)” options/states, respectively.

(5) Heating mode setting

Heating mode setting property specifies the heating mode of the combination microwave oven, and to acquire the current setting (i.e. current mode).

The following property values shall be used:

Microwave heating: 0x41

Defrosting (a heating mode that is focused on defrosting frozen foods): 0x42

Oven: 0x43

Grill: 0x44

Toaster: 0x45

Fermenting: 0x46

Stewing (a heating mode that is focused on preparing stew-type dishes): 0x47

Steaming (a heating mode that is focused on preparing steamed dishes): 0x48

Two-stage microwave heating (a mode in which one microwave heating cycle is followed by another microwave heating cycle): 0x51

When no mode is specified, 0xFF shall be used.

It is only required to implement the property values that correspond to the modes supported by the actual piece of equipment in which this class is implemented. For example, if the piece of equipment in which this class is implemented does not have an oven function, it is not necessary to implement the value for the oven mode (0x43).

If a mode is specified by this property when both this property and the “automatic heating setting” property (EPC = 0xE1) have been implemented, the value of the “automatic heating setting” property shall change to 0x42 (manual heating) unless the property already contains 0x42. It is recommended that this property and the “automatic heating menu setting” property (EPC = 0xD0) be implemented in such a way that the value of the “automatic heating menu setting” property will change to 0xFF (= no menu item specified) when a mode is specified by this property.

(6) Automatic heating setting

Automatic heating setting property specifies whether or not to use the combination microwave oven’s automatic heating mode (i.e. a mode in which the combination microwave oven performs the automatic heating cycle specified by the “automatic heating menu setting” property), and to acquire the current setting. 0x41 and 0x42 shall be used for the “automatic heating” and “manual heating” options/states, respectively. When neither the “automatic heating” nor “manual heating” mode is specified, 0xFF shall be used.



© 2000 - 2023 ECHONET Consortium

If a mode is specified by the “heating mode setting” property (EPC = 0xE0) when both this property and the “heating mode setting” property have been implemented, the value of this property shall change to 0x42 (manual heating) unless it already contains 0x42.

If an automatic heating cycle is specified by the “automatic heating menu setting” property (EPC = 0xD0) when both this property and the “automatic heating menu setting” property have been implemented, the value of this property shall change to 0x41 (automatic heating) unless it already contains 0x41.

| When the following property is set (SET), | The required property value of “Automatic heating setting” (EPC = 0xE1) property |
|---|---|
| If a mode is specified (Set) by the “heating mode setting” property (EPC = 0xE0) | The value of the “automatic heating setting” property (EPC = 0xE1) must be 0x42 (manual heating) |
| If an automatic heating cycle is specified (Set) by the “automatic heating menu setting” property (EPC = 0xD0) | The value of the “automatic heating setting” property (EPC = 0xE1) must be 0x41 (automatic heating) |

(7) Automatic heating level setting

Automatic heating level setting property specifies by selecting a level from among the five predefined levels, the level of automatic heating for the option specified by the “automatic heating menu setting” property, and to acquire the current setting.

The heating temperature values for the 5 levels may be defined freely, as long as 0x31, 0x33 and 0x35 are used for the lowest, standard and highest temperatures, respectively. When no heating level is specified, 0xFF shall be used.

(8) Automatic heating menu setting

When the value of the “automatic heating setting” property is 0x41 (automatic heating), this property is used to select an automatic heating cycle, and to acquire the current setting. The property values specified in the table below shall be used (The property value range shall be 0x00 to 0xFF (0 to 255)). When no automatic heating cycle is specified, 0xFF shall be used.

**Automatic Heating Cycle Codes**

| Automatic heating cycle code | Name of automatic heating cycle | Description |
|---|---|---|
| 0x00 | Fully automatic | An automatic heating cycle in which the combination microwave oven automatically determines what to do. |
| 0x01 | Reheating boiled rice | Reheats boiled rice that has gotten cold in the microwave heating mode. |
| 0x02 | Reheating cooked dish | Reheats cooked dishes (other than boiled rice) that have gotten cold in the microwave heating mode. |
| 0x03 | Sake | Warms sake in the microwave heating mode. |
| 0x04 | Milk | Heats milk in the microwave heating mode. |



© 2000 - 2023 ECHONET Consortium

| | | |
|---|---|---|
| 0x05 | Boiling leafy vegetables | Boils leafy vegetables in the microwave heating mode. |
| 0x06 | Boiling fruit/flower vegetables | Boils fruit/flower vegetables in the microwave heating mode. |
| 0x07 | Boiling root vegetables | Boils root vegetables in the microwave heating mode. |
| 0x08 to 0x1F | Reserved for future use. | |
| 0x20 | Defrosting meat | Defrosts frozen meat, etc. |
| 0x21 | Defrosting sashimi | Defrosts frozen sashimi, etc. |
| 0x22 to 0x2F | Reserved for future use. | |
| 0x30 | Hamburger steaks | Grills hamburger steaks. |
| 0x31 | Gratins | Bakes gratins. |
| 0x32 | Chawan-mushi | Makes chawan-mushi (steamed savory egg custard with chicken, shrimps and vegetables). |
| 0x33 | Cooking rice | Cooks rice. |
| 0x34 | Reheating fries | Reheats fries that have gotten cold. |
| 0x35 | Fries | Makes fries. |
| 0x36 to 0x5F | Reserved for future use. | |
| 0x60 | Sponge cakes | Bakes sponge cakes. |
| 0x61 | Chiffon cakes | Bakes chiffon cakes. |
| 0x62 | Cookies | Bakes cookies. |
| 0x63 | Cream puffs | Bakes cream puffs. |
| 0x64 | Rolls | Bakes rolls. |
| 0x65 | Toast | Toasts slices of bread. |
| 0x66 to 0x7F | Reserved for future use. | |
| 0x80 to 0xFE | To be defined by the user. | |
| 0xFF | No automatic heating cycle specified. | |

It is only required to implement the property values that correspond to the functions supported by the actual piece of equipment in which this class is implemented.

When the actual piece of equipment is capable of performing any of the automatic heating cycles listed above, the corresponding code must be implemented in the piece of equipment.

If an automatic heating cycle is specified by this property when both this property and the “automatic heating setting” property (EPC = 0xE1) have been implemented, the value of the “automatic heating setting” property shall change to 0x41 (automatic heating) unless the “automatic heating setting” property already contains 0x41.

It is recommended that this property and the “heating mode setting” property (EPC = 0xE0) be implemented in such a way that the value of the “heating mode setting” property will change to 0xFF (= no mode specified) when an automatic heating cycle is specified by this property.

(9) Oven mode setting

When the value of the “heating mode setting” property (EPC = 0xE0) is 0x43 (oven), this property is used to specify the sub-mode to use, and to acquire the current setting.

The following property values shall be used:



© 2000 - 2023 ECHONET Consortium

Convection oven mode (heats the chamber or bakes food by allowing the heated air to convect within the chamber without forcefully circulating it): 0x41

Circulation oven mode (heats the chamber or bakes food by forcefully circulating the heated air within the chamber using a fan, etc.): 0x42

Hybrid oven mode (convection and circulation oven functions are used in combination): 0x43

Automatic selection mode (combination microwave oven automatically determines what to do within the “oven” mode): 0x40

When no sub-mode is specified, 0xFF shall be used.

It is only required to implement the property values that correspond to the modes supported by the actual piece of equipment in which this class is implemented. For example, if the piece of equipment in which this class is implemented does not have a circulation oven function, it is not necessary to implement the value for the circulation oven mode (0x42).

(10) Oven preheating setting

When the value of the “heating mode setting” property (EPC = 0xE0) is 0x43 (oven), this property is used to specify whether or not to preheat the chamber for the selected oven sub-mode, and to acquire the current setting. 0x41 and 0x42 shall be used for the “with preheating” and “without preheating” options, respectively. When no option is specified, 0xFF shall be used. When no option is specified, the mode to be used shall be implementation-dependent.

(11) Fermenting mode setting

When the value of the “heating mode setting” property (EPC = 0xE0) is 0x46 (fermenting), this property is used to specify the sub-mode to use, and to acquire the current setting.

The following property values shall be used:

Convection fermentation mode (heats the chamber and ferments food by allowing the heated air to convect within the chamber without forcefully circulating it): 0x41

Circulation fermentation mode (heats the chamber and ferments food by forcefully circulating the heated air within the chamber using a fan, etc.): 0x42

Hybrid fermentation mode (convection and circulation fermentation functions are used in combination to heat the chamber and ferment food): 0x43

Microwave fermentation mode (ferments food using the microwave heating function): 0x51

Automatic selection mode (combination microwave oven automatically determines what to do within the “fermenting” mode): 0x40

When no sub-mode is specified, 0xFF shall be used.

It is only required to implement the property values that correspond to the modes supported by the actual piece of equipment in which this class is implemented. For example, if the piece of equipment in which this class is implemented does not have a circulation fermentation function, it is not necessary to implement the value for the circulation fermentation mode (0x42).



© 2000 - 2023 ECHONET Consortium

(12) Chamber temperature setting

When the value of the “heating mode setting” property (EPC = 0xE0) is 0x43 (oven) or 0x46 (fermenting), this property is used to specify the temperature in the chamber in 0.1°C increments, and to acquire the current setting. The property value range shall be 0xF554 to 0x7FFE (-273.2 to 3276.6°C). When the property value of the actual piece of equipment is higher than the upper limit of the property value range, the overflow code 0x7FFF shall be used. When the property value is lower than the lower limit of the property value range, the underflow code 0x8000 shall be used.

When the actual piece of equipment automatically controls the chamber temperature (for example, in its fermenting mode), the property value shall be 0x8001.

When no temperature is specified, 0x8002 shall be used.

When a value is set in this property and the actual piece of equipment in which this class is implemented is not capable of achieving the temperature that corresponds to the property value (because part or all of the value range of the actual piece of equipment is below the lower limit of the property value range), the value to be used shall be implementation-dependent.

(13) Food temperature setting

Food temperature setting property specifies the as-heated food temperature in 0.1°C increments, and to acquire the current setting. The property value range shall be 0xF554 to 0x7FFE (-273.2 to 3276.6°C). When the property value of the actual piece of equipment is higher than the upper limit of the property value range, the overflow code 0x7FFF shall be used. When the property value is lower than the lower limit of the property value range, the underflow code 0x8000 shall be used.

When no temperature is specified, 0x8002 shall be used.

When a value is set in this property and the actual piece of equipment in which this class is implemented is not capable of achieving the temperature that corresponds to the property value (because part or all of the value range of the actual piece of equipment is below the lower limit of the property value range), the value to be used shall be implementation-dependent.

In cases where the design is such that setting a value with this property may necessitate a “heating time setting” property (EPC = 0xE5) value change to ensure consistency between property contents, a means shall be provided to automatically make any required change to the content of the “heating time setting” property.

(14) Heating time setting

Heating time setting property specifies the duration of heating in the “hour (0x00 to 0x17 (0 to 23)): minute (0x00 to 0x3B (0 to 59)): second (0x00 to 0x3B (0 to 59))” format, and to acquire the current setting. Three bytes shall be used, with the highest- and lowest-order bytes used for the “hour” and “second” values, respectively. When the heating time is unknown because an automatic heating cycle has been specified by the “automatic heating menu setting” property or for any other reason, 0xFDFDFD shall be used as the property value. The heating time shall be specified before the heating starts.

When no heating time is specified, 0x000000 shall be used.



© 2000 - 2023 ECHONET Consortium

When a value is set in this property and the actual piece of equipment in which this class is implemented is not capable of achieving the duration that corresponds to the property value (because part or all of the value range of the actual piece of equipment is below the lower limit of the property value range), the value to be used shall be implementation-dependent.

In cases where the design is such that setting a value with this property may necessitate a “food temperature setting” property (EPC = 0xE4) value change to ensure consistency between property contents, a means shall be provided to automatically make any required change to the content of the “food temperature setting” property.

(15) Remaining heating time setting

Remaining heating time setting property specifies the time remaining to complete the heating cycle in the “hour (0x00 to 0x17 (0 to 23)): minute (0x00 to 0x3B (0 to 59)): second (0x00 to 0x3B (0 to 59))” format, and to acquire the current setting. Three bytes shall be used, with the highest- and lowest-order bytes used for the “hour” and “second” values, respectively.

When the remaining heating time is unknown because an automatic heating cycle has been specified by the “automatic heating menu setting” property or for any other reason, 0xFDFDFD shall be used as the property value.

When no remaining heating time is specified, 0x000000 shall be used.

The remaining heating time shall be specified after the heating starts, because the setting of a value in this property means altering the remaining heating time.

(16) Microwave heating power setting

When the value of the “heating mode setting” property (EPC = 0xE0) is 0x41 (microwave heating), 0x42 (defrosting), 0x47 (stewing) or 0x48 (steaming), or when the value of the “heating mode setting” property (EPC = 0xE0) is 0x46 (fermenting) and the value of the “fermenting mode setting” property (EPC = 0xD6) is 0x51 (microwave fermentation mode), this property is used to specify the microwave heating power in 1W increments, and to acquire the current setting.

The property value range shall be 0x0000 to 0xFFFD (0 to 65533W).

When the property value of the actual piece of equipment is higher than the upper limit of the property value range, the overflow code 0xFFFF shall be used. When the property value is lower than the lower limit of the property value range, the underflow code 0xFFFE shall be used.

When a value is set in this property and the actual piece of equipment is not capable of achieving the microwave heating power that corresponds to the property value, the value to be used shall be implementation-dependent.

When the microwave heating power is not specified, 0x0000 shall be used.

(17) Prompt message setting

When it is necessary to instruct the combination microwave oven to temporarily stop heating at a point during a heating cycle to allow the user to perform manual reversing, mixing, etc. and display a message to instruct the user on the manual action to be performed, this property is used to specify



© 2000 - 2023 ECHONET Consortium

the prompt message to be displayed and the timing of the message (in terms of a percentage of the total duration of the heating cycle that is allowed to elapse (from the start of the heating cycle) before the message is displayed), and to acquire the current settings.

This property shall use four pairs of bytes, with the first and second bytes of each pair used for the prompt message code (0x00 to 0xFF (0 to 255)) and the timing value (0x00 to 0x64 (0 to 100%)), respectively. The pairs of values shall be arranged in the order that the messages will be displayed. The prompt message codes are defined as follows:

**Prompt Message Codes**

| Prompt message code | Instruction |
|---|---|
| 0x00 | No instruction |
| 0x01 | Please stir the mixture. |
| 0x02 | Please stir the mixture using an eggbeater. |
| 0x03 | Please stir the mixture gently but thoroughly. |
| 0x04 | Please mix the ingredients thoroughly. |
| 0x05 | Please reverse foods. |
| 0x06 | Please skim the scum. |
| 0x07 to 0x1F | Reserved for future use. |
| 0x20 | Please cover with aluminum foil and continue heating. |
| 0x21 | Please cover with clear plastic wrap and continue heating. |
| 0x22 | Please put the lid on the pot and continue heating. |
| 0x23 to 0x2F | Reserved for future use. |
| 0x30 | Please remove the aluminum foil and continue heating. |
| 0x31 | Please remove the clear plastic wrap and continue heating. |
| 0x32 | Please take the lid off the pot and continue heating. |
| 0x33 to 0x3F | Reserved for future use. |
| 0x40 | Please add the appropriate ingredients. |
| 0x41 | Please sprinkle salt and pepper. |
| 0x42 to 0x4F | Reserved for future use. |
| 0x50 | Preheating completed |
| 0x51 to 0x7F | Reserved for future use. |
| 0x80 to 0xFF | To be defined by the user. |

Example:

When the total duration of the heating cycle is 10 minutes and the combination microwave oven is to be instructed to display the prompt message “Please reverse foods” (0x05) two minutes (0x14 = 20% of the total duration of the heating cycle) after the heating cycle starts, the content of the property shall be 0x05 14 00 00 00 00 00 00.

(18) Accessories to combination microwave oven setting



© 2000 - 2023 ECHONET Consortium

Accessories to combination microwave oven setting property specifies, by means of a 2-byte bitmap, what accessory or accessories to use for the combination microwave oven, and to acquire the current setting. The value contained in a bit in the bitmap shall be “1” if the accessory represented by that bit is used (in the specified position in cases where the position is specified) and “0” if the accessory represented by that bit is not used.

When Bit 15 contains “1”, it shall mean that the accessories represented by all the other bits (Bit 0 through Bit 14) are used. When Bit 15 contains “0”, it shall mean that one or more accessories selected from those represented by Bit 0 through Bit 14 are used.

The composition of the 2-byte bitmap shall be as follows:

| Bit number | Accessory | Explanation |
|---|---|---|
| Bit 0 | Ceramic turntable | A circular ceramic turntable that is attachable to a rotating lattice, etc. |
| Bit 1 | Glass turntable | A circular glass turntable that is attachable to a rotating lattice, etc. |
| Bit 2 | Metallic turntable | A circular metallic turntable that is attachable to a rotating lattice, etc. |
| Bit 3 | Rotating lattice | A rotating lattice or plate. |
| Bit 4 | Rotating latticed metallic grill | A latticed metallic grill that is attachable to a turntable. |
| Bit 5 | Rectangular ceramic tray (third shelf level [as counted from the lowest shelf level]) | A rectangular ceramic tray for use at the third shelf level of the chamber of a combination microwave oven having 3 shelf levels. |
| Bit 6 | Rectangular metallic tray (third shelf level [as counted from the lowest shelf level]) | A rectangular metallic tray for use at the third shelf level of the chamber of a combination microwave oven having 3 shelf levels. |
| Bit 7 | Latticed metallic grill (third shelf level [as counted from the lowest shelf level]) | A latticed metallic grill that is mountable on a rectangular tray for use at the third shelf level of the chamber of a combination microwave oven having 3 shelf levels. |
| Bit 8 | Rectangular ceramic tray (second shelf level [as counted from the lowest shelf level]) | A rectangular ceramic tray for use at the second shelf level of the chamber of a combination microwave oven having 2 or more shelf levels. |
| Bit 9 | Rectangular metallic tray (second shelf level [as counted from the lowest shelf level]) | A rectangular metallic tray for use at the second shelf level of the chamber of a combination microwave oven having 2 or more shelf levels. |
| Bit 10 | Latticed metallic grill (second shelf level [as counted from the lowest shelf level]) | A latticed metallic grill that is mountable on a rectangular tray for use at the second shelf level of the chamber of a combination microwave oven having 2 or more shelf levels. |
| Bit 11 | Rectangular ceramic tray (first shelf level [lowest shelf level]) | A rectangular ceramic tray for use at the lowest shelf level of the chamber of a combination microwave oven. |
| Bit 12 | Rectangular metallic tray (first shelf level [lowest shelf level]) | A rectangular metallic tray for use at the lowest shelf level of the chamber of a combination microwave oven. |
| Bit 13 | Latticed metallic grill (first shelf level [lowest shelf level]) | A latticed metallic grill that is mountable on a rectangular tray for use at the lowest shelf level of the chamber of a combination microwave oven. |
| Bit 14 | To be defined by the user. | |



© 2000 - 2023 ECHONET Consortium

| | | |
|---|---|---|
| Bit 15 | Accessory selection bit | When Bit 15 contains “1”, it shall mean that the accessories represented by all the other bits (Bit 0 through Bit 14) are used. When Bit 15 contains “0”, it shall mean that one or more accessories selected from the accessories represented by Bit 0 through Bit 14 are used. |

It is only required to implement the property values that correspond to the functions supported by the actual piece of equipment in which this class is implemented.

When the actual piece of equipment is capable of providing any of the messages listed above, the corresponding code must be implemented in the piece of equipment.

When none of the accessories is to be used, Bits 0 through Bit 14 shall contain “0” and Bit 15 shall contain “1” (property value = 0x8000).

When no accessory is specified or the accessories selected are unknown, Bits 0 through Bit 14 and Bit 15 shall contain “0” (property value = 0x0000).

(19) Display character string setting

Display character string setting property specifies to input character strings to use on the display of the combination microwave oven. The shift-JIS code system (1 character = 2 bytes) shall be used. The maximum number of characters shall be 20. The first and succeeding pairs of bytes shall be used for the first and succeeding characters, respectively. When the number of characters to input is less than 20, each pair of bytes after the pair of bytes that contains the last character shall contain the shift-JIS space code (0x8140). For example, when the number of characters is 15, each of the 16th through 20th pairs of bytes shall contain the shift-JIS space code (0x8140).

(20) Two-stage microwave heating setting (duration)

When the value of the “heating mode setting” property (EPC = 0xE0) is 0x51 (two-stage microwave heating), this property is used to specify the duration of the first and second microwave heating cycles in the “hour (0x00 to 0x17 (0 to 23)): minute (0x00 to 0x3B (0 to 59)): second (0x00 to 0x3B (0 to 59))” format, and to acquire the current setting. Three bytes shall be used for each heating cycle, with the first set of bytes (first through third bytes) and second set of bytes (fourth through sixth bytes) used for the first and second heating cycles, respectively, and the highest- and lowest-order bytes of each set of bytes used for the “hour” and “second” values, respectively.

When the duration of the heating cycles for two-stage microwave heating is not specified, the value 0x000000 000000 shall be used.

The durations shall be specified before the two-stage microwave heating starts.

This property is output during a power outage of the “heating time setting” property (EPC = 0xE5) and there is no need to correlate the properties.

When a value is set in this property and the actual piece of equipment in which this class is implemented is not capable of achieving the duration that corresponds to the property value (because part or all of the value range of the actual piece of equipment is below the lower limit of



© 2000 - 2023 ECHONET Consortium

the property value range), the value to be used shall be implementation-dependent.

(21) Two-stage microwave heating setting (heating power)

When the value of the “heating mode setting” property (EPC = 0xE0) is 0x51 (two-stage microwave heating), this property is used to specify the heating power for the first and second microwave heating cycles in 1W increments, and to acquire the current setting. Two bytes shall be used for each heating cycle, with the first pair of bytes (first and second bytes) and second pair of bytes (third and fourth bytes) used for the first and second heating cycles, respectively.

The property value range for each microwave heating cycle shall be 0x0000 to 0xFFFD (0 to 65533W). When the property value of the actual piece of equipment is higher than the upper limit of the property value range, the overflow code 0xFFFF shall be used. When the property value is lower than the lower limit of the property value range, the underflow code 0xFFFE shall be used.

When a value is set in this property and the actual piece of equipment is not capable of achieving the microwave heating power that corresponds to the property value, the value to be used shall be implementation-dependent.

When the heating power for the heating cycles for two-stage microwave heating is not specified, the value 0x0000 0000 shall be used.

This property is output during a power outage of the “microwave heating power setting” property (EPC = 0xE7) and there is no need to correlate the properties.



© 2000 - 2023 ECHONET Consortium

# 3．4．4 Requirements for cooking heater class

Class group code : 0x03

Class code : 0xB9

Instance code : 0x01–0x7F (0x00: All-instance specification code)

| Property name | EPC | Contents of property<br>Value range (decimal notation) | Data type | Data size | Unit | Access rule | Man-datory | Announcement at status change | Remark |
|---|---|---|---|---|---|---|---|---|---|
| Operation status | 0x80 | This property indicates the ON/OFF status. | unsigned char | 1 byte | — | Set | | ○ | |
| | | ON=0x30, OFF=0x31 | | | | Get | ○ | | |
| Heating status | 0xB1 | Heating status of the left stove: heating status of the right stove: heating status of the far-side stove: heating status of the roaster. | unsigned char × 4 | 1 byte × 4 | – | Get | ○ | | |
| | | Standing by: 0x40<br>Operating: 0x41<br>Temporarily stopped: 0x42<br>Heating prohibited: 0x50<br>Unknown: 0xFF | | | | | | | |
| Heating setting | 0xB2 | Left stove setting: right stove setting: far-side stove setting: roaster setting | unsigned char | 1 byte | – | Set/Get | | | |
| | | Stop heating: 0x40<br>Start/resume heating: 0x41<br>Temporarily stop heating: 0x42<br>No setting: 0xFF | | | | | | | |
| All stop setting | 0xB3 | Used to stop the heating on all the left stove, right stove, far-side stove and roaster. | unsigned char | 1 byte | – | Set | ~~○~~ | | |
| | | Stop the heating on all of the left stove, right stove, far-side stove and roaster: 0x40 | | | | | | | |
| Heating power setting | 0xE7 | Heating power of the left stove: heating power of the right stove: heating power of the far-side stove: heating power of the roaster | unsigned char × 4 | 2 bytes × 4 | W Or Level Or – | Set/Get | | | |
| | | ・When the heating powers are specified in terms of output wattage (0 –10000W) : 0x0000–0x2710<br>・When the heating powers are specified in terms of level (17 levels) : 0x3000–0x3010<br>・When the heating powers are specified in terms of the state of flame:<br>Very low flame: 0x4002<br>Low flame: 0x4004<br>Medium flame: 0x4006<br>High flame: 0x4008<br>High power: 0x400a<br>・No setting: 0xFFFF | | | | | | | |



© 2000 - 2023 ECHONET Consortium

| Property name | EPC | Contents of property<br>Value range (decimal notation) | Data type | Data size | Unit | Access rule | Man-datory | Announcement at status change | Remark |
|---|---|---|---|---|---|---|---|---|---|
| Heating temperature setting | 0xE3 | Left stove temperature setting: right stove temperature setting: far-side stove temperature setting<br>Temperature setting: 0x32–0xFA (50–250°C)<br>No setting: 0xFF | unsigned char × 3 | 1 byte × 3 | °C | Set/Get | | | |
| Heating modes of stoves setting | 0xE0 | Heating mode of the left stove: heating mode of the right stove: heating mode of the far-side stove<br>Heating power control mode: 0x41<br>Deep-frying mode (tempura, etc.): 0x42<br>Water heating mode: 0x43<br>Rice boiling mode: 0x44<br>Stir-frying mode: 0x45<br>No setting: 0xFF | unsigned char × 3 | 1 byte × 3 | – | Set/Get | | | |
| Relative time settings of OFF timers | 0x96 | Relative time setting of the left stove OFF timer: relative time setting of the right stove OFF timer: relative time setting of the far-side stove OFF timer: relative time setting of the roaster OFF timer<br>Used to set the relative time settings of the OFF timers (in the HH:MM:SS format), activate the relevant timers and acquire the updated current relative time settings of the OFF timers.<br>(0–0x17 : 0–0x3B: 0–0x3B) × 4<br>(= 0–23) : (= 0–59): (= 0–59)<br>No setting: 0xFFFFFF | unsigned char × 3 × 4 | 1 byte × 3 × 4 | – | Set/Get | | | |
| Child lock setting | 0xA1 | Child lock ON/OFF setting<br>Child lock OFF: 0x40<br>Child lock ON: 0x41 | unsigned char | 1 byte | – | Set/Get | | | |
| Radiant heater lock setting | 0xA2 | Radiant heater lock ON/OFF<br>Radiant heater lock OFF: 0x40<br>Radiant heater lock ON: 0x41 | unsigned char | 1 byte | – | Set/Get | | | |

Note: In the “Announcement at status change” column, ○ denotes mandatory processing when the property is implemented.

(1) Operation status (The device object super class property is inherited.)

This property indicates whether this object is ready to accept control commands (ON state) or not (OFF state).

The values “0x30” and “0x31” shall be assigned to the ON and OFF states, respectively.

In the case of a node implemented with this class in which this class becomes ready to accept control commands as soon as the node starts operating, this property may be implemented with the property value fixed at “0x30.”

(2) Heating status

A GET on this property acquires the heating statuses of the cooking heater’s left stove, right stove, far-side stove and roaster.



© 2000 - 2023 ECHONET Consortium

Each of the states described below shall be assigned with the indicated value:

“Standing by” state (i.e. a state whereby the cooking heater is not operating): 0x40

“Operating” state: 0x41

“Temporarily stopped” state (i.e. a state whereby the cooking heater is operating but the heating is temporarily stopped): 0x42

“Heating prohibited” state (i.e. a state whereby the cooking heater is prohibited from starting to operate): 0x50

“Unknown” (i.e. it is not clear what state the cooking heater is in.): 0xFF

The heating statuses of the left stove, right stove, far-side stove (the “left stove,” “right stove” and “far-side stove” are the stoves located on the left, right and far sides, respectively, as seen from the front) and roaster shall be indicated in the stated order using 4 bytes. For example, if the status of the left stove is “Operating” and the statuses of the right stove, far-side stove and roaster are “Standing by,” the property value is “0x41404040.”

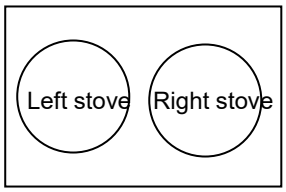


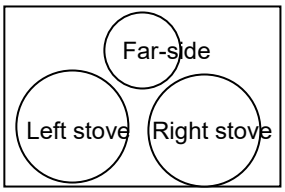


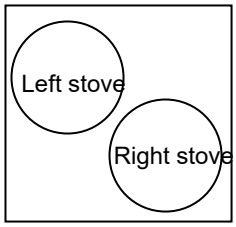


(3) Heating setting

A SET on this property sets the heating operation settings of the cooking heater’s left stove, right stove, far-side stove and roaster.

The property values “0x40,” “0x41,” “0x42” and “0xFF” shall be assigned to “Stop heating,” “Start/resume heating,” “Temporarily stop heating” and “No setting,” respectively.

A GET on this property acquires the current settings.

The heating settings of the left stove, right stove, far-side stove (the “left stove,” “right stove” and “far-side stove” are the stoves located on the left, right and far sides, respectively, as seen from the front) and roaster shall be indicated in the stated order using 4 bytes. For example, in the case of a SET to set only the left stove to “Start /resume heating,” the property value is “0x41FFFFFF.” If a stove or the roaster is set to a value other than “0xFF” and then to “0xFF,” the setting of the stove or roaster acquired by a GET on this property will be the value before the stove or roaster was set to “0xFF.” For example, if the property is first set to “0x41FFFFFF” and then to “0xFF41FFFF,” the GET value will be “0x4141FFFF.”

(4) All stop setting

A SET on this property stops the heating on all of the cooking heater’s left stove, right stove, far-side stove and roaster.

The property value for stopping the heating on all of the cooking heater’s left stove, right stove, far-side stove and roaster shall be “0x40.”



© 2000 - 2023 ECHONET Consortium

In the case where a “mobile service” is to be supported, the implementation of this property is mandatory.

(5) Heating power setting

A SET on this property sets the heating power settings of the cooking heater’s stoves and roaster.

In the case where the heating powers are specified in terms of output wattage (in units of 1W), values in the “0x0000–0x2710” (0W–10000W) range shall be used.

In the case where the heating powers are specified in terms of power level, 17 power levels shall be provided and values between 0x3000 and 0x3010 shall be used. The states that correspond to the 17 levels may be defined freely, as long as the values “0x3000” and “0x3010” are assigned to the states in which the heating power is lowest and highest, respectively. The state that corresponds to “0x3000” shall be the state in which the heating power is lowest, and shall not be a state in which the heating power is 0.

In the case where the heating powers are specified in terms of the state of flame, each of the states described below shall be assigned with the indicated value:

Very low flame: 0x4002, Low flame: 0x4004, Medium flame: 0x4006, High flame: 0x4008, High power: 0x400A, No setting: 0xFFFF.

The heating power settings of the left stove, right stove, far-side stove (the “left stove,” “right stove” and “far-side stove” are the stoves located on the left, right and far sides, respectively, as seen from the front) and roaster shall be indicated in the stated order using 8 bytes. For example, the property value in the case where the left stove is set to “High flame,” the right stove is set to “Very low flame” and the heating powers of the far-side stove and roaster are not specified is “0x4008 4002 FFFF.”

A GET on this property acquires the current heating power settings of the cooking heater. The heating power settings of the cooking heater in the case where the device cannot achieve the values set in this property shall be implementation-dependent.

(6) Heating temperature setting

A SET on this property sets the heating temperature settings of the stoves of the cooking heater (in units of 1°C). A GET on this property acquires the current heating temperature settings of the stoves. The value range shall be 0x32 to 0xFA (50°C to 250°C). The value “0xFF” indicates that the setting is not set. The operation of the actual device in the case where a property value the actual device implemented with this class does not support is specified shall be implementation-dependent.

The heating temperature settings of the left stove, right stove and far-side stove (the “left stove,” “right stove” and “far-side stove” are the stoves located on the left, right and far sides, respectively, as seen from the front) shall be indicated in the stated order using 3 bytes. For example, the property value in the case where the heating temperature setting of the left stove is 180°C and the heating temperature settings of the right and far-side stoves are not set is “0xB4FFFF.”

(7) Heating modes of stoves setting



© 2000 - 2023 ECHONET Consortium

A SET on this property sets the heating modes of the left stove, right stove (the “left” and “right” stoves are the stoves located in the left and right, respectively, as seen from the front) and far-side stove.

A GET on this property acquires the current heating mode settings of the stoves.

Each of the modes described below shall be assigned with the indicated value:

Heating power control mode (i.e. a mode in which the operation is controlled using heating power values that can be set through EPC 0xE7): 0x41

Deep-frying mode (tempura, etc.) (i.e. a mode for cooking deep fries (tempura, etc.) using heating temperature values that can be set through EPC 0xE3): 0x42

Water heating mode: 0x43, Rice boiling mode: 0x44, Stir-frying mode (i.e. a heating mode suitable for cooking stir fries): 0x45

No setting: 0xFF

The heating mode settings of the left stove, right stove and far-side stove (the “left stove,” “right stove” and “far-side stove” are the stoves located on the left, right and far sides, respectively, as seen from the front) shall be indicated in the stated order using 3 bytes. For example, the property value in the case where the heating mode settings of the left and right stoves are “Heating power control mode” and the heating mode setting of the far-side stove is not set is “0x4141FF.”

(8) Relative time settings of OFF timers

A SET on this property sets the relative time settings of the left stove OFF timer, right stove OFF timer, far-side stove OFF timer and roaster OFF timer of the cooking heater.

A GET on this property acquires the updated relative time settings of the stove OFF timers and roaster OFF timer.

The format for the settings shall be “Hour (0x00 to 0x17 (0 to 23)): Minute (0x00 to 0x3B (0 to 59)): Second (0x00 to 0x3B (0 to 59)).”

The relative time settings of the left stove, right stove and far-side stove (the “left stove,” “right stove” and “far-side stove” are the stoves located on the left, right and far sides, respectively, as seen from the front) OFF timers and the roaster OFF timer shall be indicated in the stated order using 12 bytes. For example, the property value in the case where the relative time setting of the left stove OFF timer is 1 hour and 10 minutes is “0x01 0A 00 FF FF FF FF FF FF FF FF FF.”

The operation of the actual device in the case where a property value the actual device implemented with this class does not support (e.g. a property value that is above the upper limit of the OFF timer setting range for the actual device implemented with this class) is specified is implementation-dependent.

(9) Child lock setting

A SET on this property sets the child lock setting of the cooking heater.

A GET on this property acquires the current child lock setting of the cooking heater.

The property values “0x40” and “0x41” shall be assigned to the child lock OFF (deactivated) and



© 2000 - 2023 ECHONET Consortium

ON states, respectively.

(10) Radiant heater lock setting

A SET on this property sets the radiant heater lock setting of the cooking heater.

A GET on this property acquires the current radiant heater lock setting of the cooking heater.

The property values “0x40” and “0x41” shall be assigned to the radiant heater lock OFF (deactivated) and ON states, respectively.



© 2000 - 2023 ECHONET Consortium

# 3．4．5 Requirements for rice cooker class

Class group code : 0x03

Class code : 0xBB

Instance code : 0x01–0x7F (0x00: All-instance specification code)

| Property name | EPC | Contents of property | Data type | Data size | Unit | Access rule | Man-datory | Announce-ment at status change | Remark |
|---|---|---|---|---|---|---|---|---|---|
| | | Value range (decimal notation) | | | | | | | |
| Operation status | 0x80 | This property indicates the ON/OFF status. | unsigned char | 1 byte | — | Set | | ○ | |
| | | ON=0x30, OFF=0x31 | | | | Get | ○ | | |
| Cover open/close status | 0xB0 | This property indicates whether the cover is open or closed. | unsigned char | 1 byte | – | Get | | | |
| | | Cover open = 0x41, Cover closed = 0x42 | | | | | | | |
| Rice cooking status | 0xB1 | This property indicates rice cooking status. | unsigned char | 1 byte | – | Get | ○ | | |
| | | Stop = 0x41, Preheating = 0x42, Rice cooking = 0x43, Steaming = 0x44, Rice cooking completion = 0x45 | | | | | | | |
| Rice cooking control setting | 0xB2 | This property indicates rice cooking control setting. | unsigned char | 1 byte | – | Set/Get | ○ | | |
| | | Rice cooking start/restart = 0x41, Rice cooking suspension = 0x42 | | | | | | | |
| Warmer setting | 0xE1 | This property indicates whether or not warmer function is enabled. | unsigned char | 1 byte | – | Set/Get | | | |
| | | Warmer enabled = 0x41, Warmer disabled = 0x42 | | | | | | | |
| Inner pot removal status | 0xE5 | This property indicates whether inner pot is removed or not. | unsigned char | 1 byte | – | Get | | | |
| | | Removed = 0x41, Not removed = 0x42 | | | | | | | |
| Cover removal status | 0xE6 | This property indicates whether or not cover is removed. | unsigned char | 1 byte | – | Get | | | |
| | | Removed = 0x41, Not removed = 0x42 | | | | | | | |
| Rice cooking reservation setting | 0x90 | This property indicates whether rice cooking reservation is ON or OFF. | unsigned char | 1 byte | – | Set/Get | | | |
| | | Reservation ON = 0x41, Reservation OFF = 0x42 | | | | | | | |
| Set value of rice cooking reservation setting time | 0x91 | Timer value (HH:MM) | unsigned char × 2 | 2 bytes | – | Set/Get | | | |
| | | 0–0x17: 0–0x3B (= 0–23):(= 0–59) | | | | | | | |
| Set value of rice cooking reservation setting relative time | 0x92 | Timer value (HH:MM) | unsigned char × 2 | 2 bytes | – | Set/Get | | | |
| | | 0–0x17: 0–0x3B (= 0–23):(= 0–59) | | | | | | | |

Note: In the “Announcement at status change” column, ○ denotes mandatory processing when the property is implemented.



© 2000 - 2023 ECHONET Consortium

(1) Operation status (inherited from the device object super class property)

This property indicates whether the functions unique to this class are ready to be used (ON) or not (OFF).

In cases where the piece of equipment belongs to a node in which this class is implemented and the functions unique to this class become ready as soon as the node starts up, 0x30 (ON) may be implemented as the fixed value.

(2) Cover open/close status

This property indicates whether the rice cooker cover is open or closed. The value 0x41 shall be used to indicate that the cover is open. The value 0x42 shall be used to indicate that the cover is closed.

(3) Rice cooking status

This property indicates the rice cooking status. The values to be used shall be 0x41 for rice cooking stop, 0x42 for preheating, 0x43 for rice cooking, 0x44 for steaming, and 0x45 for rice cooking completion.

(4) Rice cooking control setting

This property indicates the rice cooking control setting (rice cooking start/restart or rice cooking suspension). The values to be used shall be 0x41 for rice cooking start/restart and 0x42 for rice cooking suspension. In the case where a “home amenity service” is to be supported, the implementation of this property is mandatory.

(5) Warmer setting

This property indicates the warmer setting. The value 0x41 shall be used to indicate that the warmer function is enabled. The value 0x42 shall be used to indicate that the function is disabled.

(6) Inner pot removal status

This property indicates whether or not the inner pot is removed. The value 0x41 shall be used to indicate that the inner pot is removed. The value 0x42 shall be used to indicate that the inner pot is not removed.

(7) Cover removal status

This property indicates whether or not the cover is removed. Here, the expression “the cover is removed” indicates that at least part of a removable cover whose removal is detectable is removed. The value 0x41 shall be used to indicate that the cover is removed. The value 0x42 shall be used to indicate that the cover is not removed.



© 2000 - 2023 ECHONET Consortium

(8) Rice cooking reservation setting

This property indicates whether the rice cooking reservation is ON or OFF. The value 0x41 shall be used to indicate that the rice cooking reservation is ON. The value 0x42 shall be used to indicate that the rice cooking reservation is OFF.

(9) Set value of rice cooking reservation setting time

When the “Rice cooking reservation setting” is ON (0x41), this property indicates the time at which rice cooling starts according to the “Rice cooking control setting” or the “Rice cooking status” changes to the “Rice cooking completion” state. The time indication is given in hours and minutes (hour: 0x00 to 0x17 (0 to 23); minute: 0x00 to 0x3B (0 to 59)). The property value shall sequentially indicate the hour and minute, beginning with the high-order byte. The higher- and lower-order bytes shall be used for the “hour” and “minute” values, respectively.

(10) Set value of rice cooking reservation setting relative time

When the “Rice cooking reservation setting” is ON (0x41), this property indicates a time relative to the current time to specify the time at which rice cooling starts according to the “Rice cooking control setting” or the “Rice cooking status” changes to the “Rice cooking completion” state. The data format shall be such that the hour and minute values range from 0x00 to 0x17 (0 to 23) and 0x00 to 0x3B (0 to 59), respectively. The property value shall sequentially indicate the hour and minute, beginning with the high-order byte.



© 2000 - 2023 ECHONET Consortium

# 3．4．6 Requirements for washing machine class

Class group code : 0x03

Class code : 0xC5

Instance code : 0x01–0x7F (0x00 : All-instance specification code)

| Property name | EPC | Contents of property<br>Value range (decimal notation) | Data type | Data size | Unit | Access rule | Man-datory | Announce-ment at status change | Remark |
|---|---|---|---|---|---|---|---|---|---|
| Operation status | 0x80 | This property indicates the ON/OFF status.<br>ON=0x30, OFF=0x31 | unsigned char | 1 byte | — | Set<br>Get | <br>○ | ○ | |
| Door/cover open/close status | 0xB0 | This property indicates whether the door/cover is open or closed.<br>Door/cover open = 0x41<br>Door/cover closed = 0x42 | unsigned char | 1 byte | – | Get | | | |
| Washing machine setting | 0xB2 | Washing machine setting<br>Start/restart the washing cycle (started/restarted) = 0x41<br>Suspend the washing cycle (suspended) = 0x42<br>Stop the washing cycle (stopped) = 0x43 | unsigned char | 1 byte | – | Set/Get | | | |
| Current stage of washing cycle | 0xE1 | This property indicates the current stage of the washing cycle.<br>Washing = 0x41, rinsing = 0x42, spin drying = 0x43, suspended = 0x44, washing cycle stopped/completed = 0x45 | unsigned char | 1 byte | – | Get | | | |
| Time remaining to complete washing cycle | 0xE6 | This property indicates the current time using the HH:MM:SS format.<br>0–0x17: 0–0x3B: 0–0x3B<br>(= 0–23): (= 0–59): (= 0–59) | unsigned char × 3 | 3 bytes | – | Get | | | |
| ON timer reservation setting | 0x90 | Reservation ON/OFF<br>Reservation ON = 0x41, reservation OFF = 0x42 | unsigned char | 1 byte | – | Set/Get | | | |
| ON timer setting | 0x91 | Timer value (HH:MM)<br>0–0x17: 0–0x3B<br>(= 0–23): (= 0–59) | unsigned char × 2 | 2 bytes | – | Set/Get | | | |
| Relative time-based ON timer setting | 0x92 | Timer value (HH:MM)<br>0–0x17: 0–0x3B<br>(= 0–23): (= 0–59) | unsigned char × 2 | 2 bytes | – | Set/Get | | | |

Note: In the “Announcement at status change” column, ○ denotes mandatory processing when the property is implemented.

(1) Operation status (inherited from the device object super class property)

This property indicates whether the washing machine is in the ON state (i.e. the washing machine responds to user operation) or OFF state. 0x30 and 0x31 shall be used for the ON and OFF states,



© 2000 - 2023 ECHONET Consortium

respectively. In cases where the washing machine belongs to a node in which the “washing machine” class is implemented and the washing machine is ready to respond to user operation as soon as the node starts up, 0x30 may be implemented as the fixed value.

(2) Door/cover open/close status

This property indicates whether the door/cover of the washing machine is open or closed. 0x41 shall be used for the “open” state and 0x42 shall be used for the “closed” state.

(3) Washing machine setting

Specifies whether to start/restart, suspend or stop the washing cycle. 0x41, 0x42 and 0x43 shall be used for the “start/restart,” “suspend” and “stop” options, respectively.

(4) Current stage of washing cycle

This property indicates the current stage of the washing cycle (i.e. washing, rinsing, spin drying, suspended or washing cycle completed/stopped). 0x41, 0x42, 0x43, 0x44 and 0x45 shall be used for the “washing,” “rinsing,” “spin drying,” “suspended” and “washing cycle completed/stopped” stages, respectively.

(5) Time remaining to complete washing cycle

This property indicates the current time using the “hour (0x00 to 0x17(0 to 23)): minute (0x00 to 0x3B (0 to 59)): second (0x00 to 0x3B (0 to 59))” format. One byte shall be used for each of the 3 values, with the highest-order byte used for the “hour” value and the lowest-order byte used for the “second” value.

(6) ON timer reservation setting

Specifies whether or not to use the washing cycle reservation function. The property value shall be 0x41(reservation ON) or 0x42(reservation OFF).This property is used in combination with the “ON timer setting” or “relative time-based ON timer setting” property.

(7) ON timer setting

When the “ON timer reservation setting” property value is “ON,” this property indicates, in the “hour (0x00 to 0x17 (0 to 23)): minute (0x00 to 0x3B (0 to 59))” format, the time at which the “washing cycle setting” property value will change to “washing cycle start” or the “current stage of washing cycle” property value will change to “washing cycle completed.” The higher- and lower-order bytes shall be used for the “hour” and “minute” values, respectively.

(8) Relative time-based ON timer setting

When the “ON timer reservation setting” property value is “ON,” this property indicates, in terms of a relative time (“hour (0x00 to 0x17 (0 to 23)) : minute (0x00 to 0x3B (0 to 59))” format)



© 2000 - 2023 ECHONET Consortium

relative to the current time, the time at which the “washing cycle setting” property value will change to “washing cycle start” or the “current stage of washing cycle” property value will change to “washing cycle completed.” The higher- and lower-order bytes shall be used for the “hour” and “minute” values, respectively.



© 2000 - 2023 ECHONET Consortium

## 3．4．7 Requirements for commercial showcase class

Class group code : 0x03

Class code : 0xCE

Instance code : 0x01–0x7F (0x00: All-instance specification code)

| Property name | EPC | Contents of property<br>Value range (decimal notation) | Data type | Data size | Unit | Access rule | Mandatory | Announcement at status change | Remark |
|---|---|---|---|---|---|---|---|---|---|
| Operation status | 0x80 | This property indicates the ON/OFF status.<br>ON=0x30, OFF=0x31 | unsigned char | 1 byte | – | Set<br>Get | <br>○ | ○ | |
| Operation mode setting | 0xB0 | Used to set cooling, non-cooling, defrosting, and other operating modes and to acquire the setting status.<br>0x41 (cooling), 0x42 (non-cooling), 0x43 (defrosting), 0x40 (others) | unsigned char | 1 byte | – | Set/Get | ○ | ○ | |
| Measured value of discharge temperature | 0xBD | Used to acquire measurements of discharge temperature.<br>0x81–0x7D | unsigned char | 1 byte | °C | Get | | | |
| Group information | 0xCA | Information to link showcases with outdoor units for showcases<br>0x00: No setting, 0x01-0xFD | unsigned char | 1 byte | - | Set<br>Get | <br>○ | | |
| Internal lighting operation status | 0xE0 | Indicates ON/OFF status of lighting installed inside the showcase.<br>0x30 (ON), 0x31 (OFF) | unsigned char | 1 byte | - | Set<br>Get | <br>○ | ○ | |
| External lighting operation status | 0xE1 | Indicates ON/OFF status of lighting installed outside the showcase.<br>0x30 (ON), 0x31 (OFF) | unsigned char | 1 byte | - | Set/Get | | ○ | |
| Compressor operation status | 0xE2 | Indicates ON/OFF status of compressor when showcase and compressor are a single unit.<br>0x30 (ON), 0x31 (OFF) | unsigned char | 1 byte | - | Set/Get | | | |
| Measured value of internal temperature | 0xE3 | Used to acquire internal temperature measurements inside the showcase.<br>0x81-0x7D (-127-125°C) | signed char | 1 byte | °C | Get | ○ | | |
| Freezing capability value | 0xE4 | Indicates rated power consumption necessary when showcase is cooling.<br>0-0xFFFD (0-65533) | unsigned short | 2 bytes | W | Get | | | |
| Defrosting heater power consumption | 0xE5 | Indicates rated power consumption when heater is operating during showcase defrosting.<br>0-0xFFFD (0-65533) | unsigned short | 2 bytes | W | Get | | | |
| Fan motor power consumption | 0xE6 | Indicates rated power consumption when showcase is operating fan motor.<br>0-0xFFFD (0-65533) | unsigned short | 2 bytes | W | Get | | | |
| Heater mode | 0xE7 | Indicates ON/OFF status of showcases with heater for hot function. *1<br>0x30 (ON), 0x31 (OFF) | unsigned char | 1 byte | - | Get | ○ | | Note 1 |
| Type of lighting inside the showcase | 0xEB | Indicates type of lighting installed inside the showcase. | unsigned char | 1 byte | - | Get | | | |



© 2000 - 2023 ECHONET Consortium

| | | | | | | | | | |
|---|---|---|---|---|---|---|---|---|---|
| | | Fluorescent lights = 0x41, LED = 0x42, no lighting = 0x43, other = 0x40 | | | | | | | |
| Type of lighting outside the case | 0xEC | Indicates type of lighting installed outside the showcase.<br>Fluorescent light = 0x41, LED = 0x42, no lighting = 0x43, other = 0x40 | unsigned char | 1 byte | - | Get | | | |
| Illuminance level setting of lighting inside the showcase | 0xED | Indicates lighting level in % installed inside of the showcase.<br>0x00-0x64 (0-100%) | unsigned char | 1 byte | - | Set / Get | | | |
| Illuminance level setting of lighting outside the case | 0xEE | Indicates lighting level in % installed outside of the showcase.<br>0x00-0x64 (0-100%) | unsigned char | 1 byte | - | Set / Get | | | |
| Temperature setting of inside the case | 0xEF | Set temperature setting of inside the case and acquire the current setting.<br>0x81-0x7E (-127-126ºC) | signed char | 1 byte | °C | Set / Get | ○ | | |
| Showcase type information | 0xD0 | This property indicates the type of the showcase.<br>Non-fluorocarbon inverter (CO2) = 0x41, inverter = 0x42, other = 0x40 | unsigned char | 1 byte | - | Get | ○ | | |
| Door type information | 0xD1 | This property indicates the type of the showcase door.<br>Open = 0x41, closed = 0x42 | unsigned char | 1 byte | - | Get | ○ | | |
| Showcase configuration information | 0xD2 | This property indicates refrigerator type, such as built-in or separate.<br>Separate type = 0x41, built-in type = 0x42 | unsigned char | 1 byte | - | Get | ○ | | |
| Showcase shape information | 0xD3 | This property indicates the shape of the showcase.<br>Box type = 0x41, desktop type = 0x42, triple glass type = 0x43, quadruple (quintuple) glass type = 0x44, reach-in = 0x45, glass top type = 0x46, multistage open (ceiling blowoff type) = 0x47, multistage open (backside blowoff type) = 0x48, flat type = 0x49, walk-in type = 0x4A, other = 0x40 | unsigned char | 1 byte | - | Get | ○ | | |
| Temperature range information for inside the case | 0xD4 | This property indicates the purpose of the showcase, either refrigeration or freezing.<br>Refrigeration = 0x41, freezing = 0x42 | unsigned char | 1 byte | - | Get | ○ | | |

Note: In the "Announcement at status change" column, ○ denotes mandatory processing when the property is implemented.

Note 1: Only required for showcases with hot function.

(1) Operation status (inherited from the device object super class property)

This property is used to set the commercial showcase to ON or OFF and to acquire the operation status. In the case of a node equipped with this class in which the functions specific to the commercial showcase start operating upon startup of the node, this property may be implemented with the value fixed at 0x30 (operation status ON).



© 2000 - 2023 ECHONET Consortium

(2) Operation mode setting

The Operation mode setting property indicates the showcase operating mode as a 1-byte value. Used to set cooling / non-cooling / defrosting / and others operating modes, and to acquire the setting status. “Other” modes are those not corresponding to any of the other operating modes. Property values 0x41/0x42/0x43/0x40 correspond to each of these operating modes in that order. As for the property values adopted, actual devices implementing this class need only implement property values that can be adopted as their functions. For example, if an actual device equipped with this class is not equipped with the defrosting function as one of its functions, there is no need to implement 0x43 for defrosting.

(3) Measured value of discharge temperature

The discharge temperature measurement property indicates the result of showcase discharge temperature (outlet temperature inside the showcase) measurement in units of 1°C. The property value range is 0x81-0x7D (–127-125°C). If the property values of actual devices exceed the property value range, the overflow code 0x7F shall be used. If the property values of actual devices are lower than the lower limit of the property value range, the underflow code 0x80 shall be used.

(4) Internal lighting operation status

The internal lighting operation status property is used to set the ON/OFF status of lighting installed inside the showcase and acquire the operation status.

(5) External lighting operation status

The external lighting operation status property is used to set the ON/OFF status of lighting installed outside the showcase and acquire the operation status.

(6) Compressor operation status

The compressor operation status property is used to set the ON/OFF status of the compressor and acquire the operation status if the main unit of the showcase has an inbuilt compressor. This property requires no response if the main unit of the showcase has no inbuilt compressor.

(7) Measured value of internal temperature

The internal temperature measurement property indicates the result of internal temperature measurement inside the showcase in units of 1°C. The property value range is 0x81-0x7D (-127-125°C). If the property values of actual devices exceed the property value range, the overflow code 0x7F shall be used. If the property values of actual devices are lower than the lower limit of the property value range, the underflow code 0x80 shall be used.

(8) Freezing capability value

The freezing capability value property indicates the freezing capability of the showcase in units of



© 2000 - 2023 ECHONET Consortium

1W. The property value range is 0x0000-0xFFFD (0-65533W). If the property values of actual devices exceed the property value range, the overflow code 0xFFFF shall be used.

(9) Defrosting heater power consumption

The defrosting heater power consumption property indicates the rated power consumption of the defrosting heater when the showcase is operating in defrosting mode. The property value range is set at 0x0000-0xFFFD (0-65533W). If the property values of actual devices exceed the property value range, the overflow code 0xFFFF shall be used.

(10) Fan motor power consumption

The fan motor power consumption property indicates the value of rated power consumption when the showcase is operating, in units of 1W. The property value range is 0x0000-0xFFFD (0-65533W). If the property values of actual devices exceed the property value range, the overflow code 0xFFFF shall be used.

(11) Heater mode

The heater mode property is used to acquire the ON/OFF status of heaters in showcases with hot function. When two modes (such as hot and cold) are used in different shelves of the same showcase, the operating mode property is cooling and this property is ON. When all shelves in a showcase are used hot, the operating mode property is non-cooling and this property is ON.

(12) Group information

Group information property values provide information to link showcases with external devices for showcases. Showcases and external devices for showcases with the same property values shall be connected using the same refrigerant piping. Note that the value shall be unique within identical ECHONET/ECHONET Lite domains.

(13) Showcase type information

This property indicates the type of showcase: non-fluorocarbon inverter, normal, or other。

(14) Door type information

This property indicates the type of showcase door: open-type or closed-type.

(15) Showcase configuration information

This property indicates the applicable showcase type: case with built-in freezer (freezer/refrigeration unit) or case with separate freezer (condensing unit).

(16) Type of lighting inside the showcase

This property indicates the type of lighting installed in the showcase; fluorescent lights = 0x41,



© 2000 - 2023 ECHONET Consortium

LED = 0x42, no lighting = 0x43, other = 0x40.

(17) Type of lighting outside the case.

This property indicates the type of lighting installed outside of the showcase: fluorescent lights = 0x41, LED = 0x42, no lighting = 0x43, other = 0x40.

(18) Illuminance level setting of lighting inside the showcase

This property indicates the current lighting level in % installed inside of the showcase. Set lighting level and acquire the current setting. If the lighting level of the actual device is higher or lower than the % unit, the property of the actual device shall be assigned to the property value of % unit specified in this property.

(19) Illuminance level setting of lighting outside the case

This property indicates the current lighting level in % installed outside of the showcase. Set lighting level and acquire the current setting. If the lighting level of the actual device is higher or lower than the % unit, the property of the actual device shall be assigned to the property value of % unit specified in this property.

(20) Temperature setting of inside the case

Set temperature setting of inside the showcase and acquire the current setting. The property value range shall be 0x81 to 0x7E (-127 to 126°C). When the property value of the actual piece of equipment is higher than the upper limit of the property value range, the overflow code 0x7F shall be used. When the property value is lower than the lower limit of the property value range, the underflow code 0x80 shall be used. It is only required to implement the property values that are supported by the actual piece of equipment in which this class is implemented.

(21) Showcase shape information

Showcase type information indicates the showcase shape in 1 byte: box type, desktop type, desk type, triple glass type, quadruple (quintuple) glass type, reach-in type, glass top type, multistage open (ceiling blowoff type), multistage open (backside blowoff type), flat type, walk-in type Those indicated as “other” have shapes that not fall into any of these types. Property values 0x41/0x42/0x43/0x44/0x45/0x46/0x47/0x48/0x49/0x4A/0x40 shall correspond to each of these shape in that order.

(22) Temperature range information for inside the case

Temperature range information for inside of the case indicates a showcase temperature range in 1 byte: refrigeration or freezing Property values 0x41/0x42 correspond to each temperature range in that order.



© 2000 - 2023 ECHONET Consortium

## 3．4．8 Requirements for clothes dryer class

Class group code : 0x03

Class code : 0xC6

Instance code : 0x01- 0x7F (0x00: All-instance specification code)

| Property name | EPC | Contents of property<br>Value range (decimal notation) | Data type | Data size | Unit | Access rule | Mandatory | Announcement at status change | Remark |
|---|---|---|---|---|---|---|---|---|---|
| Operation status | 0x80 | This property indicates the ON/OFF status.<br>ON=0x30, OFF=0x31 | unsigned char | 1 byte | － | Set<br>Get | <br>○ | ○ | |
| Door/cover open/close status | 0xB0 | This property indicates the status of the door or cover as to whether it is open or closed.<br>Door/cover open = 0x41<br>Door/cover closed = 0x42 | unsigned char | 1 byte | － | Get | | | |
| Drying setting | 0xB2 | Drying setting<br>Start/restart drying=0x41,<br>Suspend drying=0x42,<br>Stop drying=0x43 | unsigned char | 1 byte | － | Set/Get | | | |
| Drying status | 0xE1 | Drying status<br>Drying in progress=0x41<br>Drying suspended=0x42<br>Drying completed/stopped=0x43 | unsigned char | 1 byte | － | Get | | | |
| Remaining drying time | 0xE6 | This property indicates the remaining drying time in the “HH:MM:SS” format.<br>0–0x17: 0–0x3B : 0–0x3B<br>(=0–23):(=0–59):(=0–59) | unsigned char × 3 | 3 bytes | － | Get | | | |
| ON timer reservation setting | 0x90 | Reservation ON/OFF<br>Reservation ON=0x41<br>Reservation OFF=0x42 | unsigned char | 1 byte | － | Set/Get | | | |
| ON timer setting | 0x91 | Timer value HH:MM<br>0–0x17: 0–0x3B<br>(=0–23):(=0–59) | unsigned char × 2 | 2 bytes | － | Set/Get | | | |
| Relative time-based ON timer setting | 0x92 | Timer value HH:MM<br>0–0x17: 0–0x3B<br>(=0–23):(=0–59) | unsigned char × 2 | 2 bytes | － | Set/Get | | | |

Note: In the “Announcement at status change” column, ○ denotes mandatory processing when the property is implemented.

(1) Operation status (a property inherited from the device object super class)

This property indicates whether the clothes dryer is in the ON state (i.e. the clothes dryer responds to user operation) or OFF state. 0x30 and 0x31 shall be used for the ON and OFF states, respectively. In cases where the clothes dryer belongs to a node in which the “clothes dryer” class



© 2000 - 2023 ECHONET Consortium

is implemented and the clothes dryer is ready to respond to user operation as soon as the node starts up, 0x30 may be implemented as the fixed value.

(2) Door/cover open/close status

This property indicates whether the door or cover of the clothes dryer is open or closed.

0x41 shall be used for the “open” state and 0x42 shall be used for the “closed” state.

(3) Drying setting

Specifies what the clothes dryer is instructed to do (start/restart drying=0x41, suspend drying=0x42, stop drying=0x43).

(4) Drying status

This property indicates the status of the clothes dryer’s drying operation (drying in progress=0x41, drying suspended=0x42, drying completed/stopped=0x43).

(5) Remaining drying time

This property indicates the remaining drying time in the “hour (0x00–0x17(0–23)): minute (0x00–0x3B (0–59)): second (0x00–0x3B (0–59))” format, with the higher-order, intermediate-order and lower-order bytes used for the “hour,” “minute” and “second” values, respectively.

(6) ON timer reservation setting

Specifies whether the reservation function for drying operation is ON or OFF. This property shall be related to the “ON timer setting” or “Relative time-based ON timer setting” property. The property value for “reservation function ON” shall be 0x41 and the property value for “reservation function OFF” shall be 0x42.

(7) ON timer setting

This property indicates, when the setting of the “ON timer reservation setting” property is “ON,” the time at which the setting of the “Drying setting” property becomes “start drying” or the setting of the “Drying status” property becomes “drying completed .” The “hour (0x00 to 0x17 (0 to 23)) : minute (0x00 to 0x3B (0 to 59))” format shall be used, with the higher- and lower-order bytes used for the “hour” and “minute” values, respectively.

(8) Relative time-based ON timer setting

When the setting of the “ON timer reservation setting” property is “ON,” this property indicates, in terms of a relative time (“hour (0x00 to 0x17 (0 to 23)) : minute (0x00 to 0x3B (0 to 59))” format) relative to the current time, the time at which the setting of the “Drying setting” property becomes “start drying” or the setting of the “Drying status” property becomes “drying completed. The higher- and lower-order bytes shall be used for the “hour” and “minute” values, respectively.



© 2000 - 2023 ECHONET Consortium

## 3．4．9 Requirements for washer and dryer class

Class group code : 0x03

Class code : 0xD3

Instance code : 0x01–0x7F (0x00 = All-instance specification code)

| Property name | EPC | Contents of property<br>Value range (decimal notation) | Data type | Data size | Unit | Access rule | Mandatory | Announcement at status change | Remark |
|---|---|---|---|---|---|---|---|---|---|
| Operation status | 0x80 | This property indicates the ON/OFF status.<br>ON=0x30, OFF=0x31 | unsigned char | 1 byte | — | Set<br>Get | <br>○ | ○ | |
| Door/cover open/close status | 0xB0 | Used to acquire the status of the door/cover (i.e. open or closed).<br>Door/cover open = 0x41<br>Door/cover closed = 0x42 | unsigned char | 1 byte | — | Get | | | |
| Washer and dryer setting | 0xB2 | Used to specify whether to start or stop the washing, drying or washing and drying cycle, and to acquire the current status.<br>Start/resume or operation ongoing = 0x41<br>Suspend(ed) = 0x42<br>Stop(ped) = 0x43 | unsigned char | 1 byte | — | Set/Get | | | |
| Washer and dryer cycle setting 1 | 0xD0 | Used to specify the washer and dryer cycle option(s) to use in the “washing and drying,” “washing” or “drying” mode and to acquire the current setting(s). The value ranges shall be as follows:<br>Washing and drying course: 0x21–0x3F<br>Washing and drying course maker original code: 0x40–0x4F<br>Washing course: 0x61–0x7F<br>Washing course maker original code: 0x80–0x8F<br>Drying course: 0xA1–0xBF<br>Drying course maker original code: 0xC0–0xDF | unsigned char | 1 byte | — | Set/Get | | | Note 1<br>Note 2 |



© 2000 - 2023 ECHONET Consortium

| | | | | | | | | | |
|---|---|---|---|---|---|---|---|---|---|
| | | <Washing and drying course><br>Standard = 0x21, silent = 0x22, heavily soiled clothes = 0x23, hard-to-remove stains = 0x24, presoaking = 0x25, blankets = 0x26, soft = 0x27, dry = 0x28, clean rinsing = 0x29, ironing/business shirts = 0x2A, hang drying = 0x2B, thick clothes = 0x2C, disinfection = 0x2D, oil stains = 0x2E, memory = 0x2F, detergent saving = 0x30, lightly soiled clothes = 0x31, quick wash of small amount of laundry = 0x32<br>Washing and drying course/maker original course = 0x40–0x4F<br><Washing course><br>Standard = 0x61, silent = 0x62, heavily soiled clothes = 0x63, hard-to-remove stains = 0x64, presoaking = 0x65, blankets = 0x66, soft = 0x67, dry = 0x68, clean rinsing = 0x69, disinfection = 0x6A, oil stains = 0x6B, memory = 0x6C, detergent saving = 0x6D, lightly soiled clothes = 0x6E, quick wash of small amount of laundry = 0x6F, tank cleaning = 0x7F<br>Washing course/maker original course = 0x80–0x8F<br><Drying course><br>Standard = 0xA1, blankets = 0xA2, soft = 0xA3, dry = 0xA4, ironing/business shirts = 0xA5, hang drying = 0xA6, thick clothes = 0xA7, disinfection = 0xA8, shrinkage minimization = 0xA9, finishing = 0xAA, stationary drying = 0xAB, user definition of drying time = 0xAC, garment warming = 0xAD, tank drying = 0xBF<br>Drying course/maker original course = 0xC0–0xCF | | | | | | | |
| Washer and dryer cycle setting 2 (Note 1) | 0xD1 | Used to specify the washer and dryer cycle option(s) to use in the “washing and drying” mode, and to acquire the current setting(s). The drying option(s) to use shall be specified with the “drying cycle setting” property (EPC = 0xD2).<br>Maker original code = 0xE0–0xEF | unsigned char | 1 byte | — | Set/Get | | | Note 1<br>Note 2 |
| | | No washing = 0x20, standard = 0x21, silent = 0x22, heavily soiled clothes = 0x23, hard-to-remove stains = 0x24, presoaking = 0x25, blankets = 0x26, soft = 0x27, dry = 0x28, clean rinsing = 0x29, disinfection = 0x2D, oil stains = 0x2E, memory = 0x2F, detergent saving = 0x30, lightly soiled clothes = 0x31, quick wash of small amount of laundry = 0x32, tank cleaning = 0x3F<br>Maker original course = 0xE0–0xEF | | | | | | | |
| Drying cycle setting (Note1) | 0xD2 | Used to specify the drying cycle option(s) to use, and to acquire the current setting. For the “washing and drying” mode, the “washer and dryer cycle setting 2” property (EPC = 0xD1) shall be used.<br>Maker original code = 0xE0 to 0xEF | unsigned char | 1 byte | — | Set/Get | | | Note 1<br>Note 2 |



© 2000 - 2023 ECHONET Consortium

| | | | | | | | | | |
|---|---|---|---|---|---|---|---|---|---|
| | | No drying = 0xA0, standard = 0xA1, blankets = 0xA2, soft = 0xA3, dry = 0xA4, ironing/business shirts = 0xA5, hang drying = 0xA6, thick clothes = 0xA7, disinfection = 0xA8, shrinkage minimization = 0xA9, finishing = 0xAA, stationary drying = 0xAB, user definition of drying time = 0xAC, garment warming = 0xAD, heater current limit = 0xAE, tank drying = 0xBF<br>Maker original course = 0xE0 0xEF | | | | | | | |
| Washer and dryer cycle option list 1 | 0xD3 | Used to acquire a bitmap list of the washer and dryer cycle options that can be specified with the “washer and dryer cycle setting 1” property.<br>When the value contained in the bit for the desired washer and dryer cycle option is “1”, the option can be specified. When the value contained in the bit for the desired washer and dryer cycle option is “0”, the option cannot be specified. For the requirement as to which bit must be used for which option, refer to the detailed explanation. | unsigned char × 12, | 12 bytes | — | Get | | | |
| Washer and dryer cycle option list 2 | 0xD4 | Used to acquire a bitmap list of the washer and dryer cycle options that can be specified with the “washer and dryer cycle setting 2” property.<br>When the value contained in the bit for the desired washer and dryer cycle option is “1”, the option can be specified. When the value contained in the bit for the desired washer and dryer cycle option is “0”, the option cannot be specified. For the requirement as to which bit must be used for which option, refer to the detailed explanation. | unsigned char × 4, | 4 bytes | — | Get | | | |
| Washer and dryer cycle option list 3 | 0xD5 | Used to acquire a bitmap list of the drying cycle options that can be specified with the “drying cycle setting” property.<br>When the value contained in the bit for the desired drying cycle option is “1”, the option can be specified. When the value contained in the bit for the desired drying cycle option is “0”, the option cannot be specified. For the requirement as to which bit must be used for which option, refer to the detailed explanation. | unsigned char × 4, | 4 bytes | — | Get | | | |
| Water flow rate setting | 0xD6 | Used to specify the water flow rate by selecting a level from among the predefined levels and to acquire the current setting.<br><Absolute setting><br>0x31–0x40 (16 levels)<br>* 0x31 and 0x40 shall be used for the lowest and highest flow rates, respectively.<br><Relative setting relative to the automatic setting><br>- Automatic setting<br>0xFF<br>- Relative setting in the positive direction<br>0xA0–0xA7: Levels 1–8<br>- Relative setting in the negative direction<br>0xC0–0xC7: Levels 1–8 | unsigned char | 1 byte | — | Set/Get | | | |
| Rotation speed for spin drying | 0xD7 | Used to specify the rotation speed for spin drying in r/min. and to acquire the current setting. | unsigned short | 2 bytes | — | Set/Get | | | |



© 2000 - 2023 ECHONET Consortium

| | | | | | | | | | |
|---|---|---|---|---|---|---|---|---|---|
| setting | | <Absolute setting><br>- 0x0000– 0x0FFF (0–4095 r/min.)<br><Relative setting relative to the automatic setting><br>- Automatic setting<br>0xFFFF<br>- Relative setting in the positive direction<br>0xA000–0xA7FF (1–2048 r/min.)<br>- Relative setting in the negative direction<br>0xC000–0xC7FF (1–2048r/min.) | | | | | | | |
| Degree of drying setting | 0xD8 | Used to specify the degree of drying to achieve by selecting a level from among the 16 predefined levels and to acquire the current setting.<br><Absolute setting><br>- 0x31–0x40 (16 levels)<br>* 0x31 and 0x40 shall be used for the lowest and highest levels, respectively.<br><Relative setting relative to the automatic setting><br>- Automatic setting<br>0xFF<br>- Relative setting in the positive direction<br>0xA0–0xA7: Levels 1–8<br>- Relative setting in the negative direction<br>0xC0–0xC7: Levels 1–8 | unsigned char | 1 byte | — | Set/Get | | | |
| Remaining washing time | 0xDB | Acquires the remaining washing time in the “HH:MM” format.<br>0–0xFE : 0–0x3B<br>(=0-254) hours : (=0-59) minutes<br>Remaining time unknown=0xFF : 0xFF | unsigned char × 2 | 2 bytes | — | Get | | | |
| Remaining drying time | 0xDC | Acquires the remaining drying time in the “HH:MM” format.<br>0–0xFE : 0–0x3B<br>(=0–254) hours : (=0–59) minutes<br>Remaining time unknown=0xFF : 0xFF | unsigned char × 2 | 2 bytes | — | Get | | | |
| Elapsed time on the ON timer | 0xDF | Used to acquire the time elapsed on the ON timer after the ON timer was activated.<br>0–0xFF: 0–0x3B<br>(= 0–255): (= 0–59) | unsigned char × 2 | 2 bytes | Hour minutes | Get | | | |
| Presoaking time setting | 0xE1 | Used to specify the duration of the presoaking process and to acquire the current setting.<br><Absolute setting><br>- 0x00–0x17: 0x00–0x3B<br>(= 0–23 hours): (= 0–59 minutes)<br><Relative setting relative to the automatic setting><br>- Automatic setting<br>0xFF: 0xFF<br>- Relative setting in the positive direction<br>0xA000–0xA03B: 1–60 minutes<br>- Relative setting in the negative direction<br>0xC000–0xC03B: 1–60 minutes | unsigned char × 2 | 2 bytes | h, min | Set/Get | | | |



© 2000 - 2023 ECHONET Consortium

| | | | | | | | | | |
|---|---|---|---|---|---|---|---|---|---|
| Current stage of washer and dryer cycle | 0xE2 | Used to acquire the current stage of the washer and dryer cycle.<br>Washing = 0x41<br>Rinsing = 0x42<br>Spin drying = 0x43<br>Suspended = 0x44<br>Washing completed = 0x45<br>Washing/drying (without wrinkling minimization) completed = 0x51<br>Drying = 0x52<br>Wrinkling minimization = 0x53<br>Drying (with wrinkling minimization) completed = 0x54<br>Standing by to start = 0x61<br>1st rinsing = 0x71<br>2nd rinsing = 0x72<br>3rd rinsing = 0x73<br>4th rinsing = 0x74<br>5th rinsing = 0x75<br>6th rinsing = 0x76<br>7th rinsing = 0x77<br>8th rinsing = 0x78<br>1st spin drying = 0x81<br>2nd spin drying = 0x82<br>3rd spin drying = 0x83<br>4th spin drying = 0x84<br>5th spin drying = 0x85<br>6th spin drying = 0x86<br>7th spin drying = 0x87<br>8th spin drying = 0x88<br>Preheat spin drying = 0x91<br>Unique code defined by the manufacture = 0xE0–0xEF | unsigned char | 1 byte | - | Get | | | Note 2 |
| Water volume setting 1 | 0xE3 | Used to specify the water volume in liters and to acquire the current setting.<br><Absolute setting><br>- 0x00–0x7F (0–127 liters)<br>< Relative setting relative to the automatic setting ><br>- Automatic setting<br>0xFF<br>- Relative setting in the positive direction<br>0xA0–0xBF: 1–32 liters<br>- Relative setting in the negative direction<br>0xC0–0xDF (1–32 liters) | unsigned char | 1 byte | liter | Set/Get | | | |
| Water volume setting 2 | 0xE4 | Used to specify the water volume by selecting a level from among the predefined levels and to acquire the current setting. | unsigned | 1 byte | — | Set/Get | | | |



© 2000 - 2023 ECHONET Consortium

| | | | | | | | | | |
|---|---|---|---|---|---|---|---|---|---|
| | | <Absolute setting><br>- 0x31–0x40 (16 levels)<br>- 0x31 and 0x40 shall be used for the lowest and highest water levels, respectively.<br>< Relative setting relative to the automatic setting ><br>- Automatic setting<br>0xFF<br>- Relative setting in the positive direction<br>0xA0–0xA7: Levels 1–8<br>- Relative setting in the negative direction<br>0xC0–0xC7: Levels 1– 8 | char | | | | | | |
| Washing time setting | 0xE5 | Used to specify the duration of the washing process and to acquire the current setting.<br><Absolute setting><br>- 0x00–0x17: 0x00–0x3B<br>(= 0–23 hours): (= 0–59 minutes)<br>< Relative setting relative to the automatic setting ><br>- Automatic setting<br>0xFFFF<br>- Relative setting in the positive direction<br>0xA000–0xA03B: 1–60 minutes<br>Relative setting in the negative direction<br>- 0xC000–0xC03B: 1–60 minutes | unsigned char × 2 | 2 bytes | h, min | Set/Get | | | |
| Number of times of rinsing setting | 0xE6 | Used to specify the number of times of rinsing and to acquire the current setting.<br>0–8 times (0x00–0x08)<br>Automatic = 0xFF | unsigned char | 1 byte | — | Set/Get | | | |
| Rinsing process setting | 0xE7 | Used to specify the rinsing process(es) to use by means of a bitmap, and to acquire the current setting. Four bits are used to represent each rinsing process as follows:<br>Bits 0 through bit 3: 1st rinsing<br>Bits 4 through bit 7: 2nd rinsing<br>Bits 8 through bit 11: 3rd rinsing<br>Bits 12 through bit 15: 4th rinsing<br>Bits 16 through bit 19: 5th rinsing<br>Bits 20 through bit 23: 6th rinsing<br>Bits 24 through bit 27: 7th rinsing<br>Bits 28 through bit 31: 8th rinsing<br>0000: Automatic mode<br>0001: Rinsing without additional feeding of water from the tap<br>0010: Rinsing with additional feeding of water from the tap<br>0011: Shower rinsing | unsigned char × 4 | 4 bytes | — | Set/Get | | | |
| Spin drying time setting | 0xE8 | Used to specify the duration of the spin drying process in minutes and to acquire the current setting. | unsigned | 1 byte | min | Set/Get | | | |



© 2000 - 2023 ECHONET Consortium

| | | | | | | | | | |
|---|---|---|---|---|---|---|---|---|---|
| | | <Absolute setting><br>- 0x00–0x3B (0–59 minutes)<br>< Relative setting relative to the automatic setting ><br>- Automatic setting<br>0xFF<br>- Relative setting in the positive direction<br>0xA0–0xBF: 1–32 minutes<br>- Relative setting in the negative direction<br>0xC0–0xDF: 1–32 minute | char | | | | | | |
| Drying time setting | 0xE9 | Used to specify the duration of the drying process and to acquire the current setting.<br><Absolute setting><br>- 0x00–0x17: 0x00–0x3B<br>(= 0–23 hours): (= 0–59 minutes)<br>< Relative setting relative to the automatic setting ><br>- Automatic setting<br>0xFF: 0xFF<br>- Relative setting in the positive direction<br>0xA000–0xA03B: 1–60 minutes<br>- Relative setting in the negative direction<br>0xC000–0xC03B: 1–60 minutes | unsigned char × 2 | 2 bytes | h, min | Set/Get | | | |
| Warm water setting | 0xEA | Used to specify the temperature of laundry water in °C and to acquire the current setting.<br>0–100°C (0x00–0x64)<br>Not to use warm water = 0xFE<br>Automatic water temperature setting = 0xFF | unsigned char | 1 byte | °C | Set/Get | | | |
| Bathtub water recycle setting | 0xEB | Used to specify whether or not, and when, to recycle used bathtub water, and acquire the current setting.<br>Bathtub water not used : 0x40<br>Washing only : 0x41<br>Rinsing only (excluding the final rinsing) : 0x42<br>All rinsing processes : 0x43<br>Washing + rinsing (excluding the final rinsing) : 0x44<br>Washing + all rinsing processes : 0x45 | unsigned char | 1 byte | — | Set/Get | | | |
| Wrinkling minimization setting | 0xEC | Used to specify whether or not to use the wrinkling minimization function, and to acquire the current setting.<br>Wrinkling minimization function ON : 0x41<br>Wrinkling minimization function OFF : 0x42 | unsigned char | 1 byte | — | Set/Get | | | |
| Time remaining to complete washer and dryer cycle | 0xED | Used to acquire the time remaining to complete the current washer and dryer cycle in the “HH: MM” format.<br>0–0xFE: 0–0x3B<br>(= 0–254 hours): (= 0–59 minutes)<br>Remaining time unknown = 0xFF: 0xFF | unsigned char × 2 | 2 bytes | — | Get | | | |
| Door/cover lock setting | 0xEE | Used to specify the state of the door/cover lock during operation and to acquire the current setting. | unsigned | 1 byte | — | Set/Get | | | |



© 2000 - 2023 ECHONET Consortium

| | | | | | | | | | |
|---|---|---|---|---|---|---|---|---|---|
| | | Locked: 0x41<br>Unlocked: 0x42 | char | | | | | | |
| Washer and dryer cycle | 0xEF | Used to acquire the current washer and dryer cycle setting.<br>Bytes 1 and 2:<br>This property indicates the available items in a bitmap format.<br>Byte 3: Presoaking<br>With presoaking: 0x41<br>Without presoaking: 0x42<br>Bytes 4 and 5: Washing time<br>The value of the “washing time setting” property shall be referenced.<br>Byte 6: Number of times of rinsing<br>The value of the “’number of times of rinsing’ setting” property shall be referenced.<br>Bytes 7 through 10: Rinsing process<br>The value of the “rinsing process setting” property shall be referenced.<br>Byte 11: Spin drying time<br>The value of the “spin drying time setting” property shall be referenced.<br>Bytes 12 and 13: Drying time<br>The value of the "drying time setting” property shall be referenced.<br>Byte 14: Warm water setting<br>The value of the “warm water setting” property shall be referenced.<br>Byte 15: Water volume setting 1<br>The value of the “water volume setting 1” property shall be referenced.<br>Byte 16: Water volume setting 2<br>The value of the “water volume setting 2” property shall be referenced.<br>Byte 17: Bathtub water recycle setting<br>The value of the “bathtub water recycle setting” property shall be referenced.<br>Byte 18: Water flow rate setting<br>The value of the “water flow rate setting” property shall be referenced.<br>Bytes 19 and 20: “Rotation speed for spin drying” setting<br>The value of the “’rotation speed for spin drying’ setting” property shall be referenced.<br>Byte 21: “Degree of drying” setting<br>The value of the “’degree of drying’ setting” property shall be referenced.<br>Bytes 22 and 23: Presoaking time setting<br>The value of the “presoaking time setting” property shall be referenced.<br>Byte 24: Wrinkling minimization setting<br>The value of the “wrinkling minimization setting” property shall be referenced. | unsigned Char × 24 | 24 bytes | — | Get | | | |
| ON timer reservation setting | 0x90 | Used to specify whether or not to use the ON timer-based reservation function, and to acquire the current setting.<br>Reservation ON = 0x41, reservation OFF = 0x42 | unsigned char | 1 byte | — | Set/Get | | | |
| ON timer setting | 0x91 | Used to specify the time for the time-based reservation function of the ON timer and to acquire the current setting.<br>0–0x17: 0–0x3B<br>(= 0–23): (= 0–59) | unsigned char × 2 | 2 bytes | — | Set/Get | | | |



© 2000 - 2023 ECHONET Consortium

| | | | | | | | | | |
|---|---|---|---|---|---|---|---|---|---|
| Relative time-based ON timer setting | 0x92 | Used to specify the relative time for the relative time-based reservation function of the ON timer and to acquire the time remaining for the current reservation.<br>0–0xFF: 0–0x3B<br>(= 0–255): (= 0–59) | unsigned char × 2 | 2 bytes | — | Set/Get | | | |

Note: In the "Announcement at status change" column, ○ denotes mandatory processing when the property is implemented.

Note 1: The washer and dryer cycle shall be specified either by the "washer and dryer cycle setting 1" property (EPC = 0xD0) or by the "washer and dryer cycle setting 2" property (EPC = 0xD1) combined with the "drying cycle setting" property (EPC = 0xD2). Either the "washer and dryer cycle setting 1" property or the "washer and dryer cycle setting 2" and "drying cycle setting" properties shall be implemented in the actual piece of equipment (the alternative shall not be implemented).

The following properties may be used to make changes or additions to the washer and dryer cycle options specified with the "washer and dryer cycle setting 1" property or with the "washer and dryer cycle setting 2" and "drying cycle setting" properties:

・Presoaking time setting (EPC = 0xE1)
・Water volume setting 1 (EPC = 0xE3)
・Water volume setting 2 (EPC = 0xE4)
・Washing time setting (EPC = 0xE5)
・Number of times of rinsing setting (EPC = 0xE6)
・Rinsing process setting (EPC = 0xE7)
・Spin drying time setting (EPC = 0xE8)
・Drying time setting (EPC = 0xE9)
・Warm water setting (EPC = 0xEA)
・Bathtub water recycle setting (EPC = 0xEB)
・Wrinkling minimization setting (EPC = 0xEC)
・Water flow rate setting (EPC = 0xD6)
・Rotation speed for spin drying setting (EPC = 0xD7)
・Degree of drying setting (EPC = 0xD8)

Note 2: Maker original code shall be used for the property which is not defined as the property of the ECHONET object specification.
The code in the maker original code shall be set by the individual maker and add/delete/modify of the code shall be done by the individual maker.
The contents set as the maker original code can be open or not to the public by the individual maker.

(1) Operation status (inherited from the device object super class property)

This property indicates whether the washer and dryer are in the ON state (i.e. the washer and dryer



© 2000 - 2023 ECHONET Consortium

respond to user operation) or OFF state. 0x30 and 0x31 shall be used for the ON and OFF states, respectively. In cases where the washer and dryer belong to a node in which the “washer and dryer” class is implemented and the washer and dryer are ready to respond to user operation as soon as the node starts up, 0x30 may be implemented as the fixed value.

(2) Door/cover open/close status

Door/cover open/close status property specifies the status (i.e. open or closed) of the door/cover. 0x41 shall be used for the “open” state and 0x42 shall be used for the “closed” state.

(3) Washer and dryer setting

Washer and dryer setting property specifies whether to start, stop or suspend the washer and dryer cycle, and to acquire the current operation status. 0x41 shall be used for the “start/restart(ed)” option/state and 0x42 and 0x43 shall be used for “suspend(ed)” and “stop(ped)” options/states, respectively. The relationship between the values of this property (Get) and the values of the “current stage of washer and dryer cycle” property (Get) (EPC = 0xE2) are as shown in the table below.

| “Washer and dryer setting” property | “Current stage of washer and dryer cycle” property (EPC = 0xE2) |
|---|---|
| 0x41: Washer and dryer cycle in progress | Other than below |
| 0x42: Washer and dryer cycle suspended | 0x44: Suspended |
| 0x43: Washer and dryer cycle stopped | 0x45: Washing completed<br>0x51: Washing completed/drying (without wrinkling minimization) completed<br>0x54: Drying (with wrinkling minimization) completed<br>0x61: Standing by to start |

(4) Washer and dryer cycle setting 1

Washer and dryer cycle setting 1 property specifies the washer and dryer cycle option(s) to use in the “washing and drying” (washing followed by drying), “washing” (washing only) or “drying” (drying only) mode, and to acquire the current setting(s). The value ranges for the “washing and drying,” “washing” and “drying” modes shall be 0x21 to 0x3F, 0x61 to 0x7F and 0xA1 to 0xBF, respectively. It is only required to implement the property values that correspond to the functions provided by the actual piece of equipment in which this class is implemented. The possible washer and dryer cycle options are explained below for each of the 3 modes.

<Washing and drying>

[1] Standard (0x21)

The most basic washing and drying cycle of the piece of equipment.

[2] Silent (0x22)

A washing and drying cycle focused on washing and drying clothes at an operation noise level



© 2000 - 2023 ECHONET Consortium

that is lower than that of the “standard” option.

[3] Heavily soiled clothes (0x23)

A washing and drying cycle focused on removing stains from heavily soiled clothes. In cases where two different cycles of this type are available for different levels of soiling, this cycle shall be defined as the one for relatively lightly soiled clothes.

[4] Hard-to-remove stains (0x24)

A washing and drying cycle focused on removing stains from heavily soiled clothes. In cases where two different cycles of this type are available for different levels of soiling, this cycle shall be defined as the one for relatively heavily soiled clothes. In cases where only one cycle is available for heavily soiled clothes, it must not be defined as the “hard-to-remove stains” (0x24) option.

[5] Presoaking (0x25)

A washing and drying cycle that includes a presoaking process performed before the washing process.

[6] Blankets (0x26)

A washing and drying cycle focused on washing blankets.

[7] Soft (0x27)

A washing and drying cycle focused on washing delicate clothes (e.g. those that easily lose shape).

[8] Dry (0x28)

A washing and drying cycle focused on washing clothes with a dry-cleaning symbol or delicate clothes (e.g. those that easily lose shape).

[9] Clean rinsing (0x29)

A washing and drying cycle focused on thorough rinsing.

[10] Ironing/business shirts (0x2A)

A washing and drying cycle that leaves the laundry slightly damp to facilitate ironing.

[11] Hang drying (0x2B)

A washing and drying cycle that leaves the laundry slightly damp to allow for hang drying.

[12] Thick clothes (0x2C)

A washing and drying cycle focused on drying clothes that do not dry easily.

[13] Disinfection (0x2D)

A washing and drying cycle focused on removing bacteria.

[14] Oil stains (0x2E)

A washing and drying cycle focused on removing oil stains.

[15] Memory (0x2F)

A washing and drying cycle option to perform a washing and drying cycle that has been input into the memory by the user.

[16] Detergent saving (0x30)



© 2000 - 2023 ECHONET Consortium

A washing and drying cycle focused on saving detergent.

[17] Lightly soiled clothes (0x31)

A washing and drying cycle focused on quickly washing lightly soiled clothes.

[18] Quick wash of small amount of laundry (0x32)

A washing and drying cycle focused on washing a small amount of laundry quickly.

[19] Washing and drying course/maker original course (0x40 to 0x4F)

A washing and drying process defined by the maker

<Washing>

[1] Standard (0x61)

The most basic washing cycle of the piece of equipment.

[2] Silent (0x62)

A washing cycle focused on washing clothes at an operation noise level that is lower than that of the “standard” cycle.

[3] Heavily soiled clothes (0x63)

A washing cycle focused on removing stains from heavily soiled clothes. In cases where two different cycles of this type are available for different levels of soiling, this cycle shall be defined as the one for relatively lightly soiled clothes.

[4] Hard-to-remove stains (0x64)

A washing cycle focused on removing stains from heavily soiled clothes. In cases where two different cycles of this type are available for different levels of soiling, this cycle shall be defined as the one for relatively heavily soiled clothes. In cases where only one cycle is available for heavily soiled clothes, it must not be defined as the “hard-to-remove stains” (0x64) option.

[5] Presoaking (0x65)

A washing cycle that includes a presoaking process performed before the washing process.

[6] Blankets (0x66)

A washing cycle focused on washing blankets.

[7] Soft (0x67)

A washing cycle focused on washing delicate clothes (e.g. those that easily lose shape).

[8] Dry (0x68)

A washing cycle focused on washing clothes with a dry-cleaning symbol or delicate clothes (e.g. those that easily lose shape).

[9] Clean rinsing (0x69)

A washing cycle focused on thorough rinsing.

[10] Disinfection (0x6A)

A washing cycle focused on removing bacteria.

[11] Oil stains (0x6B)

A washing cycle focused on removing oil stains.



© 2000 - 2023 ECHONET Consortium

[12] Memory (0x6C)

A washing cycle option to perform a washing cycle that has been input into the memory by the user.

[13] Detergent saving (0x6D)

A washing cycle focused on saving detergent.

[14] Lightly soiled clothes (0x6E)

A washing cycle focused on quickly washing lightly soiled clothes.

[15] Quick wash of small amount of laundry (0x6F)

A washing cycle focused on washing a small amount of laundry quickly.

[16] Tank cleaning (0x7F)

A cycle used to clean the tank.

[17] Washing course/maker original course (0x80 to 0x8F)

A washing process defined by the maker

<Drying>

[1] Standard (0xA1)

The most basic drying cycle of the piece of equipment.

[2] Blankets (0xA2)

A drying cycle focused on drying blankets.

[3] Soft (0xA3)

A drying cycle focused on drying delicate clothes (e.g. those that easily lose shape).

[4] Dry (0xA4)

A drying cycle focused on drying clothes with a dry-cleaning symbol or delicate clothes (e.g. those that easily lose shape).

[5] Ironing/business shirts (0xA5)

A drying cycle that leaves the laundry slightly damp to facilitate ironing.

[6] Hang drying (0xA6)

A drying cycle that leaves the laundry slightly damp to allow for hang drying.

[7] Thick clothes (0xA7)

A drying cycle focused on drying clothes that do not dry easily.

[8] Disinfection (0xA8)

A drying cycle focused on removing bacteria.

[9] Shrinkage minimization (0xA9)

A drying cycle focused on minimizing shrinkage of clothes.

[10] Finishing (0xAA)

A drying cycle focused on drying partly dried laundry.

[11] Stationary drying (0xAB)

A drying cycle that dries the laundry without rotating the drum or tank.



© 2000 - 2023 ECHONET Consortium

[12] User definition of drying time (0xAC)

A drying cycle option that allows the user to specify the duration of the drying cycle.

[13] Garment warming (0xAD)

A drying cycle used to warm garments.

[14] Tank drying (0xBF)

A cycle used to dry the tank.

[15] Drying course/maker original course (0xC0 to 0xCF)

A drying process defined by the maker.

(5) Washer and dryer cycle setting 2

Washer and dryer cycle setting 2 property specifies the washer and dryer cycle option(s) to use in the “washing and drying” (washing followed by drying) mode, and to acquire the current setting(s). This property is used in combination with the “drying cycle setting” property (EPC = 0xD2), which is used to specify the drying cycle option(s) to use in combination with the washer and dryer cycle options specified with this property. It is only required to implement the property values that correspond to the functions provided by the actual piece of equipment in which this class is implemented.

[1] No washing (0x20)

A cycle with no washing process.

[2] Standard (0x21)

The most basic washing and drying cycle of the piece of equipment.

[3] Silent (0x22)

A washing and drying cycle focused on washing and drying clothes at an operation noise level that is lower than that of the “standard” cycle.

[4] Heavily soiled clothes (0x23)

A washing and drying cycle focused on removing stains from heavily soiled clothes. In cases where two different cycles of this type are available for different levels of soiling, this cycle shall be defined as the one for relatively lightly soiled clothes.

[5] Hard-to-remove stains (0x24)

A washing and drying cycle focused on removing stains from heavily soiled clothes. In cases where two different cycles of this type are available for different levels of soiling, this cycle shall be defined as the one for relatively heavily soiled clothes. In cases where there is only one cycle for heavily soiled clothes, it must not be defined as the “hard-to-remove stains” (0x24) option.

[6] Presoaking (0x25)

A washing and drying cycle that includes a presoaking process performed before the washing process.

[7] Blankets (0x26)



© 2000 - 2023 ECHONET Consortium

A washing and drying cycle focused on washing blankets.

[8] Soft (0x27)

A washing and drying cycle focused on washing delicate clothes (e.g. those that easily lose shape).

[9] Dry (0x28)

A washing and drying cycle focused on washing clothes with a dry-cleaning symbol as well as delicate clothes (e.g. those that easily lose shape).

[10] Clean rinsing (0x29)

A washing and drying cycle focused on thorough rinsing.

[11] Disinfection (0x2D)

A washing and drying cycle focused on removing bacteria.

[12] Oil stains (0x2E)

A washing and drying cycle focused on removing oil stains.

[13] Memory (0x2F)

A washing and drying cycle option to perform a washing cycle that has been input into the memory by the user.

[14] Detergent saving (0x30)

A washing and drying cycle focused on saving detergent.

[15] Lightly soiled clothes (0x31)

A washing and drying cycle focused on washing lightly soiled clothes quickly.

[16] Quick wash of small amount of laundry (0x32)

A washing and drying cycle focused on washing a small amount of laundry quickly.

[17] Tank cleaning (0x3F)

A cycle used to clean the tank.

[18] Maker original course (0xE0 to 0xEF)

A washing and drying process defined by the maker.

(6) Drying cycle setting

Used to specify the drying cycle option(s) to use, and to acquire the current setting. This property is used in combination with the “washer and dryer cycle setting 2” property (EPC = 0xD1), which is used to specify the washer and dryer cycle (washing) option(s) to use in combination with the drying cycle option(s) specified with this property.

It is only required to implement the property values that correspond to the functions provided by the actual piece of equipment in which this class is implemented.

[1] No drying (0xA0)

A cycle with no drying process.

[2] Standard (0xA1)



© 2000 - 2023 ECHONET Consortium

The most basic drying cycle of the piece of equipment.

[3] Blankets (0xA2)

A drying cycle focused on drying blankets.

[4] Soft (0xA3)

A drying cycle focused on drying delicate clothes (e.g. those that easily lose shape).

[5] Dry (0xA4)

A drying cycle focused on drying clothes with a dry-cleaning symbol as well as delicate clothes (e.g. those that easily lose shape).

[6] Ironing/business shirts (0xA5)

A drying cycle that leaves the laundry slightly damp to facilitate ironing.

[7] Hang drying (0xA6)

A drying cycle that leaves the laundry slightly damp to allow for hang drying.

[8] Thick clothes (0xA7)

A drying cycle focused on drying clothes that do not dry easily.

[9] Disinfection (0xA8)

A drying cycle focused on removing bacteria.

[10] Shrinkage minimization (0xA9)

A drying cycle focused on minimizing shrinkage of clothes.

[11] Finishing (0xAA)

A drying cycle focused on drying partly dried laundry.

[12] Stationary drying (0xAB)

A drying cycle that dries the laundry without rotating the drum or tank.

[13] User definition of drying time (0xAC)

A drying cycle option that allows the user to specify the duration of the drying cycle.

[14] Garment warming (0xAD)

A cycle used to warm garments.

[15] Heater current limit (0xAE)

A drying cycle in which a limit is imposed on the amount of electric current supplied to the heater.

[16] Tank drying (0xBF)

A cycle used to dry the tank.

[17] Maker original course (0xE0 to 0xEF)

A drying process defined by the maker.

(7) Washer and dryer cycle option list 1

Washer and dryer cycle option list 1 property specifies a bitmap list of the washer and dryer cycle options that can be specified with the “washer and dryer cycle setting 1” property (0xD0) for the actual piece of equipment. If the value contained in a bit shown in the table below is “1”,



© 2000 - 2023 ECHONET Consortium

it means that the option represented by that bit is available. If the value is “0”, it means that the option represented by that bit is not available.

| | b7 | b6 | b5 | b4 | b3 | b2 | b1 | b0 |
|---|---|---|---|---|---|---|---|---|
| First byte | 0x27 | 0x26 | 0x25 | 0x24 | 0x23 | 0x22 | 0x21 | 0x20 |
| Second byte | 0x2F | 0x2E | 0x2D | 0x2C | 0x2B | 0x2A | 0x29 | 0x28 |
| Third byte | 0x37 | 036 | 0x35 | 0x34 | 0x33 | 0x32 | 0x31 | 0x30 |
| Fourth byte | 0x3F | 0x3E | 0x3D | 0x3C | 0x3B | 0x3A | 0x39 | 0x38 |
| Fifth byte | 0x67 | 0x66 | 0x65 | 0x64 | 0x63 | 0x62 | 0x61 | 0x60 |
| Sixth byte | 0x6F | 0x6E | 0x6D | 0x6C | 0x6B | 0x6A | 0x69 | 0x68 |
| Seventh byte | 0x77 | 0x76 | 0x75 | 0x74 | 0x73 | 0x72 | 0x71 | 0x70 |
| Eighth byte | 0x7F | 0x7E | 0x7D | 0x7C | 0x7B | 0x7A | 0x79 | 0x78 |
| Ninth byte | 0xA7 | 0xA6 | 0xA5 | 0xA4 | 0xA3 | 0xA2 | 0xA1 | 0xA0 |
| Tenth byte | 0xAF | 0xAE | 0xAD | 0xAC | 0xAB | 0xAA | 0xA9 | 0xA8 |
| Eleventh byte | 0xB7 | 0xB6 | 0xB5 | 0xB4 | 0xB3 | 0xB2 | 0xB1 | 0xB0 |
| Twelfth byte | 0xBF | 0xBE | 0xBD | 0xBC | 0xBB | 0xAB | 0xB9 | 0xB8 |

(8) Washer and dryer cycle option list 2

Washer and dryer cycle option list 2 property specifies a bitmap list of the washer and dryer cycle options that can be specified with the “washer and dryer cycle setting 2” property (0xD1) for the actual piece of equipment. If the value contained in a bit shown in the table below is “1”, it means that the option represented by that bit is available. If the value “0”, it means that the option represented by that bit is not available.

| | b7 | b6 | b5 | b4 | b3 | b2 | b1 | b0 |
|---|---|---|---|---|---|---|---|---|
| First byte | 0x27 | 0x26 | 0x25 | 0x24 | 0x23 | 0x22 | 0x21 | 0x20 |
| Second byte | 0x2F | 0x2E | 0x2D | 0x2C | 0x2B | 0x2A | 0x29 | 0x28 |
| Third byte | 0x37 | 0x36 | 0x35 | 0x34 | 0x33 | 0x32 | 0x31 | 0x30 |
| Fourth byte | 0x3F | 0x3E | 0x3D | 0x3C | 0x3B | 0x3A | 0x39 | 0x38 |

(9) Washer and dryer cycle option list 3

Washer and dryer cycle option list 3 property specifies a bitmap list of the washer and dryer cycle options that can be specified with the “drying cycle setting” property (0xD2) for the actual piece of equipment. If the value contained in a bit shown in the table below is “1”, it means that the option represented by that bit is available. If the value is “0”, it means that the option represented by that bit is not available.

| | b7 | b6 | b5 | b4 | b3 | b2 | b1 | b0 |
|---|---|---|---|---|---|---|---|---|
| First byte | 0xA7 | 0xA6 | 0xA5 | 0xA4 | 0xA3 | 0xA2 | 0xA1 | 0xA0 |
| Second byte | 0xAF | 0xAE | 0xAD | 0xAC | 0xAB | 0xAA | 0xA9 | 0xA8 |
| Third byte | 0xB7 | 0xB6 | 0xB5 | 0xB4 | 0xB3 | 0xB2 | 0xB1 | 0xB0 |
| Fourth byte | 0xBF | 0xBE | 0xBD | 0xBC | 0xBB | 0xAB | 0xB9 | 0xB8 |



© 2000 - 2023 ECHONET Consortium

(10) Water flow rate setting

Water flow rate setting property specifies, by selecting a level from among the predefined levels, the water flow rate for the washer and dryer cycle option(s) specified with the “washer and dryer cycle setting 1” property (EPC = 0xD0) or with the “washer and dryer cycle setting 2” property (EPC = 0xD1) and the “drying cycle setting” property (EPC = 0xD2), and to acquire the current setting. Three water flow rate setting modes shall be available: “absolute setting,” “automatic setting” and “relative setting” (relative to the automatic setting). When the actual piece of equipment cannot operate at the level specified with this property, the water flow rate to be used shall be implementation-dependent.

<Absolute setting>

It must be possible to specify the water flow rate by selecting a level from among 16 levels in the 0x31 to 0x40 (lowest to highest) range and acquire the setting.

<Automatic setting; relative setting relative to the automatic setting>

0xFF shall be used for the “automatic setting” mode.

In relative setting in the positive direction, it must be possible to specify the water flow rate by selecting a level from among 8 levels (Level 1 to Level 8) in the 0xA0 to 0xA7 range. In relative setting in the negative direction, it must be possible to specify the water flow rate by selecting a level from among 8 levels (Level 1 to Level 8) in the 0xC0 to 0xC7 range.

(11) Rotation speed for spin drying setting

Rotation speed for spin drying setting property specifies the rotation speed for spin drying (in r/min.) for the washer and dryer cycle option(s) specified with the “washer and dryer cycle setting 1” property (EPC = 0xD0) or with the “washer and dryer cycle setting 2” property (EPC = 0xD1) and the “drying cycle setting” property (EPC = 0xD2), and to acquire the current setting. Three rotation speed setting modes shall be available: “absolute setting,” “automatic setting” and “relative setting” (relative to the automatic setting). When the actual piece of equipment cannot operate at the speed specified with this property, the rotation speed to be used shall be implementation-dependent.

<Absolute setting>

It must be possible to specify the rotation speed in the 0x0000 to 0x0FFF (0 to 4095 r/min.) range and acquire the setting.

<Automatic setting; relative setting relative to the automatic setting>

0xFFFF shall be used for the “automatic setting” mode.

In relative setting in the positive direction, it must be possible to specify the rotation speed in the 0xA000 to 0xA7FF (1 to 2048 r/min.) range. In relative setting in the negative direction, it must be possible to specify the rotation speed in the 0xC000 to 0xC7FF (1 to 2048 r/min.) range.



© 2000 - 2023 ECHONET Consortium

(12) Degree of drying setting

Degree of drying setting property specifies, by selecting a level from among the predefined levels, the degree of drying for the washer and dryer cycle option(s) specified with the “washer and dryer cycle setting 1” property (EPC = 0xD0) or with the “washer and dryer cycle setting 2” property (EPC = 0xD1) and the “drying cycle setting” property (EPC = 0xD2), and to acquire the current setting. Three drying level setting modes shall be available: “absolute setting,” “automatic setting” and “relative setting” (relative to the automatic setting). When the actual piece of equipment cannot achieve the level specified with this property, the drying level to be used shall be implementation-dependent.

<Absolute setting>

It must be possible to specify the degree of drying by selecting a level from among 16 levels in the 0x31 to 0x40 (lowest to highest) range and acquire the setting.

<Automatic setting; relative setting relative to the automatic setting>

0xFF shall be used for the “automatic setting” mode.

In relative setting in the positive direction, it must be possible to specify the degree of drying by selecting a level from among 8 levels (Level 1 to Level 8) in the 0xA0 to 0xA7 range. In relative setting in the negative direction, it must be possible to specify the degree of drying by selecting a level from among 8 levels (Level 1 to Level 8) in the 0xC0 to 0xC7 range.

(13) Remaining washing time

Acquires the remaining washing time in the “hour (0x00-0xFE (0-254)): minute (0x00-0x3B (0-59))” format. The higher- and lower-order bytes shall be used for the “hour” and “minute” values, respectively. When the remaining time cannot be displayed because it is unknown, this property shall be set to “0xFF : 0xFF.”

(14) Remaining drying time

Acquires the remaining drying time in the “hour (0x00-0xFE (0-254)): minute (0x00-0x3B (0-59))” format. The higher- and lower-order bytes shall be used for the “hour” and “minute” values, respectively. When the remaining time cannot be displayed because it is unknown, this property shall be set to “0xFF : 0xFF.”

(15) Elapsed time on the ON timer

When the “ON timer reservation setting” property contains the value for “reservation ON,” this property is used to acquire the time elapsed on the ON timer after the ON timer is activated. The data format shall be “hour (0x00 to 0xFF (0 to 255)): minute (0x00 to 0x3B (0 to 59)).”

(16) Presoaking time setting



© 2000 - 2023 ECHONET Consortium

Presoaking time setting property specifies the duration of the presoaking process for the washer and dryer cycle option(s) specified with the “washer and dryer cycle setting 1” property (EPC = 0xD0) or by the “washer and dryer cycle setting 2” property (EPC = 0xD1) and the “drying cycle setting” property (EPC = 0xD2), and to acquire the current setting. Three presoaking time setting modes shall be available: “absolute setting,” “automatic setting” and “relative setting” (relative to the automatic setting). It is only required to implement the property values that are supported by the actual piece of equipment in which this class is implemented.

<Absolute setting>

The higher- and lower-order bytes shall be used for the “hour” and “minute” values, respectively.

It must be possible to specify the presoaking time in the “0x00: 0x00 to 0x17: 0x3B (0 minutes to 23 hours and 59 minutes)” range and acquire the setting. When the specified time is 0 minutes, the presoaking process will not be performed.

<Automatic setting; relative setting relative to the automatic setting>

“0xFF: 0xFF” shall be used for the “automatic setting” mode.

In relative setting in the positive direction, it must be possible to specify the presoaking time in the 0xA000 to 0xA03B (1 to 60 minutes) range. In relative setting in the negative direction, it must be possible to specify the presoaking time in the 0xC000 to 0xC03B (1 to 60 minutes) range.

(17) Current stage of washer and dryer cycle

Current stage of washer and dryer cycle property specifies the current stage of the washer and dryer cycle. It must be possible to identify the following stages using the values shown:

Washing: 0x41
Rinsing: 0x42
Spin drying: 0x43
Suspended: 0x44
Washing completed: 0x45
Washing/drying (without wrinkling minimization) completed: 0x51
Drying: 0x52
Wrinkling minimization: 0x53
Drying (with wrinkling minimization) completed: 0x54
Standing by to start: 0x61
1st rinsing: 0x71
2nd rinsing: 0x72
3rd rinsing: 0x73
4th rinsing: 0x74



© 2000 - 2023 ECHONET Consortium

5th rinsing: 0x75

6th rinsing: 0x76

7th rinsing: 0x77

8th rinsing: 0x78

1st spin drying: 0x81

2nd spin drying: 0x82

3rd spin drying: 0x83

4th spin drying: 0x84

5th spin drying: 0x85

6th spin drying: 0x86

7th spin drying: 0x87

8th spin drying: 0x88

Preheat spin drying: 0x91

In cases where it is possible to specify the number of times to repeat the rinsing process (i.e. 1st rinsing, 2nd rinsing, …), values between 0x71 and 0x78 must be used. Otherwise, 0x42 shall be used. In cases where it is possible to specify the number of times to repeat the spin drying process (i.e. 1st spin drying, 2nd spin drying, …), values between 0x81 and 0x88 must be used. Otherwise, 0x43 shall be used. In cases where a spin drying process is available in which warm air blows on the laundry while it is being dried, 0x91 shall be used for that spin drying process. The “standing by to start” stage shall include the “ON timer reservation ON” state.

The relationship between the property values of this property (Get) and the property values of the “washer and dryer setting” property (Get)(EPC = 0xB2) are as shown in the table below.

| “Current stage of washer and dryer cycle” property | “Washer and dryer setting” property (EPC = 0xB2) |
|---|---|
| Other than below | 0x41: Washer and dryer cycle in progress |
| 0x44: Suspended | 0x42: Washer and dryer cycle suspended |
| 0x45: Washing completed<br>0x51: Washing completed/drying (without wrinkling minimization) completed<br>0x54: Drying (with wrinkling minimization) completed<br>0x61: Standing by to start | 0x43: Washer and dryer cycle stopped |
| 0xE0-EF: Maker original code | Current washing and drying operation status at the washing and drying transition state defined by the individual maker |

(18) Water volume setting 1

Water volume setting 1 property specifies the water volume (in liters) for the washer and dryer cycle option(s) specified with the “washer and dryer cycle setting 1” property (EPC = 0xD0) or by the “washer and dryer cycle setting 2” property (EPC = 0xD1) and the “drying cycle setting”



© 2000 - 2023 ECHONET Consortium

property (EPC = 0xD2), and to acquire the current setting. Three water volume setting modes shall be available: “absolute setting,” “automatic setting” and “relative setting” (relative to the automatic setting). When the actual piece of equipment cannot handle the water volume specified with this property, the water volume to be used shall be implementation-dependent.

<Absolute setting>

It must be possible to specify the water volume in the 0x00 to 0x7F (0 to 127 liters) range and acquire the setting.

<Automatic setting; relative setting relative to the automatic setting>

“0xFF” shall be used for the “automatic setting” mode.

In relative setting in the positive direction, it must be possible to specify the water volume in the 0xA0 to 0xBF (1 to 32 liters) range. In relative setting in the negative direction, it must be possible to specify the water volume in the 0xC0 to 0xDF (1 to 32 liters) range.

In cases where both the “water volume setting 1” and “water volume setting 2” properties are implemented, the property values shall be correlated.

(19) Water volume setting 2

Water volume setting 2 property specifies the water volume for the washer and dryer cycle option(s) specified with the “washer and dryer cycle setting 1” property (EPC = 0xD0) or by the “washer and dryer cycle setting 2” property (EPC = 0xD1) and the “drying cycle setting” property (EPC = 0xD2), and to acquire the current setting. Three water volume setting modes shall be available: “absolute setting,” “automatic setting” and “relative setting” (relative to the automatic setting). When the actual piece of equipment cannot handle the water volume specified with this property, the level to be used shall be implementation-dependent. It is only required to implement the property values that are supported by the actual piece of equipment in which this class is implemented.

<Absolute setting>

It must be possible to specify the water volume by selecting a level from among 16 levels in the 0x31 to 0x40 (lowest to highest) range and acquire the setting.

<Automatic setting; relative setting relative to the automatic setting>

0xFF shall be used for the “automatic setting” mode.

In relative setting in the positive direction, it must be possible to specify the water volume by selecting a level from among 8 levels (Level 1 to Level 8) in the 0xA0 to 0xA7 range. In relative setting in the negative direction, it must be possible to specify the water volume by selecting a level from among 8 levels (Level 1 to Level 8) in the 0xC0 to 0xC7 range.

In cases where both the “water volume setting 1” and “water volume setting 2” properties are implemented, the property values for the “water volume setting 2” property shall be correlated with the property values for the “water volume setting 1” property.



© 2000 - 2023 ECHONET Consortium

(20) Washing time setting

Washing time setting property specifies the duration of the washing process for the washer and dryer cycle option(s) specified with the “washer and dryer cycle setting 1” property (EPC = 0xD0) or by the “washer and dryer cycle setting 2” property (EPC = 0xD1) and the “drying cycle setting” property (EPC = 0xD2), and to acquire the current setting. Three washing time setting modes shall be available: “absolute setting,” “automatic setting” and “relative setting” (relative to the automatic setting). It is only required to implement the property values that are supported by the actual piece of equipment in which this class is implemented.

<Absolute setting>

The higher- and lower-order bytes shall be used for the “hour” and “minute” values, respectively.

It must be possible to specify the washing time in the “0x00: 0x00 to 0x17: 0x3B (0 minutes to 23 hours and 59 minutes)” range and acquire the setting. When the specified time is 0 minutes, the washing process will not be performed.

<Automatic setting; relative setting relative to the automatic setting>

“0xFF: 0xFF” shall be used for the “automatic setting” mode.

In relative setting in the positive direction, it must be possible to specify the washing time in the 0xA000 to 0xA03B (1 to 60 minutes) range. In relative setting in the negative direction, it must be possible to specify the washing time in the 0xC000 to 0xC03B (1 to 60 minutes) range.

(21) Number of times of rinsing

Number of times of rinsing property specifies the number of times of rinsing for the washer and dryer cycle option(s) specified with the “washer and dryer cycle setting 1” property (EPC = 0xD0) or by the “washer and dryer cycle setting 2” property (EPC = 0xD1) and the “drying cycle setting” property (EPC = 0xD2), and to acquire the current setting. The number of times of rinsing shall be a number between 0 and 8. When 0 is selected, no rinsing will be performed. In cases where the number of times of rinsing is automatically determined by the actual piece of equipment, 0xFF shall be used as the property value. It is only required to implement the property values that are supported by the actual piece of equipment in which this class is implemented.

(22) Rinsing process setting

Rinsing process setting property specifies the rinsing process(es) to use for the washer and dryer cycle option(s) specified with the “washer and dryer cycle setting 1” property (EPC = 0xD0) or by the “washer and dryer cycle setting 2” property (EPC = 0xD1) and the “drying cycle setting” property (EPC = 0xD2), and to acquire the current setting. Four bits shall be used for each rinsing process as specified below. It is only required to implement the property values that correspond to the rinsing processes supported by the actual piece of equipment in which this class is implemented.



© 2000 - 2023 ECHONET Consortium

Bits 0 through Bit 3: 1st rinsing

Bits 4 through Bit 7: 2nd rinsing

Bits 8 through Bit 11: 3rd rinsing

Bits 12 through Bit 15: 4th rinsing

Bits 16 through Bit 19: 5th rinsing

Bits 20 through Bit 23: 6th rinsing

Bits 24 through Bit 27: 7th rinsing

Bits 28 through Bit 31: 8th rinsing

Each set of bits shall contain one of the following values:

0000: No mode specified

0001: Rinsing without additional supply of water from the tap

0010: Rinsing with additional supply of water from the tap

0011: Shower rinsing

The MSB of the first byte shall be Bit 31 and the LSB of the fourth byte shall be Bit 0.

(23) Spin drying time setting

Spin drying time setting property specifies the duration of the spin drying process for the washer and dryer cycle option(s) specified with the “washer and dryer cycle setting 1” property (EPC = 0xD0) or by the “washer and dryer cycle setting 2” property (EPC = 0xD1) and the “drying cycle setting” property (EPC = 0xD2), and to acquire the current setting. Three spin drying time setting modes shall be available: “absolute setting,” “automatic setting” and “relative setting” (relative to the automatic setting). It is only required to implement the property values that are supported by the actual piece of equipment in which this class is implemented.

<Absolute setting>

It must be possible to specify the spin drying time in the 0x00 to 0x3B (0 to 59 minutes) range and acquire the setting.

<Automatic setting; relative setting relative to the automatic setting>

“0xFF” shall be used for the “automatic setting” mode.

In relative setting in the positive direction, it must be possible to specify the spin drying time in the 0xA0 to 0xBF (1 to 32 minutes) range. In relative setting in the negative direction, it must be possible to specify the spin drying time in the 0xC0 to 0xDF (1 to 32 minutes) range.

(24) Drying time setting

Drying time setting property specifies the duration of the drying process for the washer and dryer cycle option(s) specified with the “washer and dryer cycle setting 1” property (EPC = 0xD0) or by the “washer and dryer cycle setting 2” property (EPC = 0xD1) and the “drying cycle setting” property (EPC = 0xD2), and to acquire the current setting. Three drying time setting modes shall be available: “absolute setting,” “automatic setting” and “relative setting”



© 2000 - 2023 ECHONET Consortium

(relative to the automatic setting). It is only required to implement the property values that are supported by the actual piece of equipment in which this class is implemented.

<Absolute setting>

The higher- and lower-order bytes shall be used for the “hour” and “minute” values, respectively.

It must be possible to specify the drying time in the “0x00: 0x00 to 0x17: 0x3B (0 minutes to 23 hours and 59 minutes)” range and acquire the setting. When the specified drying time is 0 minutes, the drying process will not be performed.

<Automatic setting; relative setting relative to the automatic setting>

“0xFF: 0xFF” shall be used for the “automatic setting” mode.

In relative setting in the positive direction, it must be possible to specify the drying time in the 0xA000 to 0xA03B (1 to 60 minutes) range. In relative setting in the negative direction, it must be possible to specify the drying time in the 0xC000 to 0xC03B (1 to 60 minutes) range.

(25) Warm water setting

Warm water setting property specifies whether to use warm water in the washing process for the washer and dryer cycle option(s) specified with the “washer and dryer cycle setting 1” property (EPC = 0xD0) or by the “washer and dryer cycle setting 2” property (EPC = 0xD1) and the “drying cycle setting” property (EPC = 0xD2) or specify/change the temperature of the warm water (in °C) in cases where it is specified to use warm water, and to acquire the current setting. The warm water temperature shall be between 0 and 100°C. When the value is 0xFE, it shall mean that warm water is not used. When the value is 0xFF, it shall mean that the warm water temperature is automatically set. When the actual piece of equipment cannot achieve the temperature specified with this property, the warm water temperature to be used shall be implementation-dependent.

(26) Bathtub water recycle setting

Bathtub water recycle setting property specifies whether to use used bathtub water for the washer and dryer cycle option(s) specified with the “washer and dryer cycle setting 1” property (EPC = 0xD0) or by the “washer and dryer cycle setting 2” property (EPC = 0xD1) and the “drying cycle setting” property (EPC = 0xD2) or select/reselect the process(es) in which used bathtub water is to be used in cases where it is specified to use bathtub water, and to acquire the current setting.

The property values shall be as follows:

Bathtub water not used = 0x40

Use bathtub water for washing only = 0x41

Use bathtub water for rinsing only (excluding the final rinsing process) = 0x42

Use bathtub water for all rinsing processes = 0x43



© 2000 - 2023 ECHONET Consortium

Use bathtub water for washing + rinsing (excluding the final rinsing process) = 0x44

Use bathtub water for washing + all rinsing processes = 0x45

(27) Wrinkling minimization setting

Wrinkling minimization setting property specifies whether or not to use the wrinkling minimization function after completion of the drying process for the washer and dryer cycle option(s) specified with the “washer and dryer cycle setting 1” property (EPC = 0xD0) or by the “washer and dryer cycle setting 2” property (EPC = 0xD1) and the “drying cycle setting” property (EPC = 0xD2), and to change or acquire the current setting. 0x41 shall be used when the wrinkling minimization function is to be used and 0x42 shall be used when the wrinkling minimization function is not to be used.

(28) Time remaining to complete washer and dryer cycle

Time remaining to complete washer and dryer cycle property specifies the time remaining to complete the current washer and dryer cycle in the “hour (0x00 to 0xFE (0 to 254)): minute (0x00 to 0x3B (0 to 59))” format. The higher- and lower-order bytes shall be used for the “hour” and “minute” values, respectively. When the time remaining to complete the washer and dryer cycle is unknown and cannot be displayed, “0xFF: 0xFF” shall be used.

(29) Door/cover lock setting

Door/cover lock setting property specifies the state of the door/cover during operation (i.e. locked or unlocked) and to acquire the current setting. 0x41 and 0x42 shall be used for the “locked” and “unlocked” states, respectively.

(30) Washer and dryer cycle

Washer and dryer cycle property specifies the current washer and dryer cycle setting that has been specified with the “washer and dryer cycle setting 1” property (EPC = 0xD0) or by the “washer and dryer cycle setting 2” property (EPC = 0xD1) and the “drying cycle setting” property (EPC = 0xD2) and to which the settings specified with the following properties have been applied:

Presoaking time setting (EPC = 0xE1)

Water volume setting 1 (EPC = 0xE3)

Water volume setting 2 (EPC = 0xE4)

Washing time setting (EPC = 0xE5)

Number of times of rinsing setting (EPC = 0xE6)

Rinsing process setting (EPC = 0xE7)

Spin drying time setting (EPC = 0xE8)

Drying time setting (EPC = 0xE9)

Warm water setting (EPC = 0xEA)



© 2000 - 2023 ECHONET Consortium

Bathtub water recycle setting (EPC = 0xEB)

Wrinkling minimization setting (EPC = 0xEC)

Water flow rate setting (EPC = 0xD6)

Rotation speed for spin drying setting (EPC = 0xD7)

Degree of drying setting (EPC = 0xD8)

The first and second bytes comprise a bitmap list of the properties whose values may be obtained when applicable. When the value contained in a bit is “1,” it shall mean that the setting specified with the property represented by that bit is effective and can be obtained with this property.

| | |
|---|---|
| Bit 0: Presoaking | Bit 1: Washing time setting |
| Bit 2: Number of times of rinsing setting | Bit 3: Rinsing process setting |
| Bit 4: Spin drying time setting | Bit 5: Drying time setting |
| Bit 6: Warm water setting | Bit 7: Water volume setting 1 |
| Bit 8: Water volume setting 2 | Bit 9: Bathtub water recycle setting |
| Bit 10: Water flow rate setting | Bit 11: Rotation speed for spin drying setting |
| Bit 12: Degree of drying setting | Bit 13: Presoaking time setting |
| Bit 14: Wrinkling minimization setting | Bit 15: Reserved for future use. |

The third byte indicates whether or not to use the presoaking process. 0x41 shall mean that the presoaking process is used and 0x42 shall mean that the presoaking process is not used. When the value contained in the third byte is 0x41 and Bit 13 of the set of the first and second bytes contains “1” (= effective), the 22nd and 23rd bytes must contain an appropriate value.

The fourth and fifth bytes indicate the washing time specified. This value shall be identical to the value of the “washing time setting” property.

The sixth byte indicates the number of times of rinsing specified. This value shall be identical to the value of the “‘number of times of rinsing’ setting” property.

The seventh through tenth bytes indicate the rinsing process(es) specified. This value shall be identical to the value of the “rinsing process setting” property.

The eleventh byte indicates the spin drying time specified. This value shall be identical to the value of the “spin drying time setting” property.

The twelfth and thirteenth bytes indicate the drying time specified. This value shall be identical to the value of the “drying time setting” property.

The fourteenth byte indicates the warm water setting specified. This value shall be identical to the value of the “warm water setting” property.

The fifteenth byte indicates the water volume specified with the “water volume setting 1” property. This value shall be identical to the value of the “water volume setting 1” property.

The sixteenth byte indicates the water volume specified with the “water volume setting 2” property. This value shall be identical to the value of the “water volume setting 2” property.



© 2000 - 2023 ECHONET Consortium

The seventeenth byte indicates the bathtub water recycle setting specified. This value shall be identical to the value of the “bathtub water recycle setting” property.

The eighteenth byte indicates the water flow rate specified. This value shall be identical to the value of the “water flow rate setting” property.

The nineteenth and twentieth bytes indicate the rotation speed specified for spin drying. This value shall be identical to the value of the “‘rotation speed for spin drying’ setting” property.

The twenty-first byte indicates the degree of drying specified. This value shall be identical to the value of the “‘degree of drying’ setting” property.

The twenty-second and twenty-third bytes indicate the presoaking time specified. This value shall be identical to the value of the “presoaking time setting” property. When the presoaking time setting is effective and Bit 0 of the set of the first and second bytes contains “1” (effective), the third byte must contain the appropriate value.

The twenty-fourth byte indicates the wrinkling minimization setting specified. This value shall be identical to the value of the “wrinkling minimization setting” property.

(31) ON timer reservation setting

ON timer reservation setting property specifies whether or not to use the ON timer-based reservation function (i.e. reservation ON or reservation OFF), and to acquire the current setting. The property value shall be 0x41(reservation ON) or 0x41(reservation OFF).This property is used in combination with the “ON timer setting” or “relative time-based ON timer setting” property.

(32) ON timer setting

When the value of the “‘ON timer reservation’ setting” property is “reservation ON”, this property is used to specify the time when the value of the “washer and dryer setting” property (EPC = 0xB2) will change to “start” (0x41) or the time when the value of the “current stage of washer and dryer cycle” property (EPC = 0xE2) will change to “washing completed” (0x45), “washing/drying (without wrinkling minimization) completed” (0x51) or “drying (with wrinkling minimization) completed” (0x54), in the “hour (0x00 to 0x17 (0 to 23)) : minute (0x00 to 0x3B (0 to 59))” format, and to acquire the current setting. The higher- and lower-order bytes shall be used for the “hour” and “minute” values, respectively.

(33) Relative time-based ON timer setting

When the value of the “‘ON timer reservation’ setting” property is “reservation ON”, this property is used to specify the time when the value of the “washer and dryer setting” property (EPC = 0xB2) will change to “start” (0x41) or the time when the value of the “current stage of washer and dryer cycle” property (EPC = 0xE2) will change to “washing completed” (0x45), “washing/drying (without wrinkling minimization) completed” (0x51) or “drying (with wrinkling minimization) completed” (0x54), in terms of a relative time relative to the current time, and to acquire the current setting. The “hour (0x00 to 0xFF (0 to 255)) : minute (0x00 to



© 2000 - 2023 ECHONET Consortium

0x3B (0 to 59))” format shall be used.



© 2000 - 2023 ECHONET Consortium

# 3．4．10 Requirements for the commercial showcase outdoor unit class

Class group code : 0x03

Class code : 0xD4

Instance code : 0x01–0x7F (0x00: All-instance specification code)

| Property name | EPC | Contents of property | Data type | Data size | Unit | Access rule | Man-datory | Announce-ment at status change | Remark |
|---|---|---|---|---|---|---|---|---|---|
| | | Value range (decimal notation) | | | | | | | |
| Operation status | 0x80 | This property indicates the ON/OFF status. | unsigned char | 1 byte | — | Set | | ○ | |
| | | ON=0x30, OFF=0x31 | | | | Get | ○ | | |
| Exceptional status | 0xAA | Indicates that the showcase freezer is in an exceptional status. | unsigned char | 1 byte | | Get | | | |
| | | Normal status=0x40, defrosting status=0x41 | | | | | | | |
| Operation mode setting | 0xB0 | Used to set cooling, non-cooling, and other operating modes and to acquire the setting status. | unsigned char | 1 byte | – | Set/Get | ○ | ○ | |
| | | 0x41 (cooling), 0x42 (non-cooling) | | | | | | | |
| Measured value of outdoor air temperature | 0xBE | Used to acquire measurements of outdoor air temperature. | signed char | 1 byte | ℃ | Get | | | |
| | | 0x81-0x7D (-127-125°C) | | | | | | | |
| Compressor operation status | 0xE2 | Indicates compressor ON/OFF status. | unsigned char | 1 byte | | Set/Get | | | |
| | | 0x30 (ON), 0x31 (OFF) | | | | | | | |
| Group information | 0xCA | Information to link showcases with outdoor units for showcases. | unsigned char | 1 byte | | Set | | | |
| | | 0x00: No setting<br>0x01-0xFD | | | | Get | ○ | | |

Note: In the “Announcement at status change” column, ○ denotes mandatory processing when the property is implemented. And

Devices generally known as “freezers” are assumed to be equipped with this class.

(1) Operation status (inherited from the device object super class property)

This property is used to set the commercial showcase to ON or OFF and to acquire the operation status. In the case of a node equipped with this class in which the functions specific to the commercial showcase start operating upon startup of the node, this property may be implemented with the value fixed at 0x30 (operation status ON).

(2) Exceptional status

Indicates that the showcase freezer is in defrosting status. The property values in the case of defrosting status is 0x41. The property value in the case of normal status is 0x40.

(3) Operation mode setting



© 2000 - 2023 ECHONET Consortium

The operation mode setting property indicates showcase operating mode as a 1-byte value. Used to set the cooling / non-cooling operating mode and acquire the setting status. Property values 0x41/0x42 correspond to the cooling / non-cooling operating mode, respectively. As for the property values adopted, actual devices implementing this class need only implement property values that can be adopted as their functions. For example, if an actual device equipped with this class is not equipped with the non-cooling function as one of its functions, there is no need to implement 0x42 for non-cooling.

(4) Measured value of outdoor air temperature

The outdoor air temperature measurement property indicates the result of outdoor air temperature measurement in units of 1°C. The property value range is 0x81-0x7D (–127-125°C). If the property values of actual devices exceed the property value range, the overflow code 0x7F shall be used. If the property values of actual devices are lower than the lower limit of the property value range, the underflow code 0x80 shall be used.

(5) Compressor operation status

The compressor operation status property is used to set the compressor to ON or OFF and to acquire the operation status.

(6) Group information

Group information property values provide information to link showcases with external devices for showcases. Showcases and external devices for showcases with the same property values shall be connected using the same refrigerant piping. Note that the value shall be unique within identical ECHONET/ECHONET Lite domains.



© 2000 - 2023 ECHONET Consortium

# 3．4．11 Requirements for dishwasher and dryer class

Class group code: 0x03

Class code:0xD5

Instance code: 0x01–0x7F (0x00: All-instance specification code)

| Property name | EPC | Contents of property<br>Value range (decimal notation) | Data type | Data size | Unit | Access rule | Ma n-dato ry | Announce-ment at status change | Rem ark |
|---|---|---|---|---|---|---|---|---|---|
| Operation status | 0x80 | Indicates ON／OFF state<br>ON = 0x30<br>OFF = 0x31 | unsigned char | 1 byte | — | Set<br>Get | <br>○ | ○ | |
| ON timer reservation setting | 0x90 | Indicates ON timer reservation setting<br>Reservation ON = 0x41<br>Reservation OFF = 0x42 | unsigned char | 1 byte | - | Set<br>Get | | | |
| ON timer setting | 0x91 | Indicates ON timer setting<br>Time not set<br>0xFFFF<br>Setting value<br>Hour = 1st byte<br>0x00–0x17<br>Minute = 2nd byte<br>0x00–0x3B | unsigned char x2 | 2 bytes | Hour<br>Min<br>ute | Set<br>Get | | | |
| Relative time-based ON timer setting | 0x92 | Indicates relative time-based ON timer<br>Hour = 1st byte<br>0x00–0xFF<br>Minute = 2nd byte<br>0x00–0x3B | unsigned char x2 | 2 bytes | Hour<br>Min<br>ute | Set<br>Get | | | |
| Door/cover open/close setting | 0xB0 | Indicates whether door/cover is open or closed.<br>Door/cover open = 0x41<br>Door/cover closed = 0x42 | unsigned char | 1 byte | - | Set<br>Get | | | |
| Door/cover lock setting | 0xB1 | Indicates whether door/cover is locked or unlocked.<br>Locked: 0x41<br>Unlocked: 0x42 | unsigned char | 1 byte | - | Set<br>Get | | | |
| Operation status setting | 0xB2 | Indicates whether dishwasher and dryer operation is started or stopped.<br>Start/resume or operation ongoing = 0x41<br>Operation suspended = 0x42<br>Operation stopped = 0x43 | unsigned char | 1 byte | - | Set<br>Get | | | |



© 2000 - 2023 ECHONET Consortium

| | | | | | | | | | |
|---|---|---|---|---|---|---|---|---|---|
| Dish-washing method setting | 0xD0 | Indicates dish-washing methods.<br>The value ranges shall be as follows:<br>Dish-washing operation OFF = 0x40<br>Standard = 0x41<br>Silent = 0x42<br>Heavily stained = 0x43<br>Hard-to-remove stains = 0x44<br>Soft = 0x45<br>Lightly stained = 0x46<br>Quick wash of small amount of laundry = 0x47<br>Rinsing only = 0x48<br>Disinfection = 0x49<br>Maintenance = 0x4F<br>Manufacturer-specific settings = 0xE0–0xEF | unsigned char | 1 byte | - | Set<br>Get | | | |
| Drying method setting | 0xD1 | Indicates drying methods.<br>The value ranges shall be as follows:<br>Drying operation OFF = 0x80<br>Very low = 0x81<br>Low = 0x82<br>Standard = 0x83<br>Soft = 0x84<br>High = 0x85<br>Very high = 0x86<br>User definition of drying time = 0x87<br>Drying only = 0x88<br>Drying inside = 0x8F<br>Manufacturer-specific settings = 0xE0–0xEF | unsigned char | 1 byte | - | Set<br>Get | | | |
| Storing method setting | 0xD2 | Indicates storing methods.<br>The value ranges shall be as follows:<br>Storing operation OFF = 0xC0<br>Blowing = 0xC1<br>Dehumidification = 0xC2<br>Disinfection = 0xC3<br>Manufacturer-specific settings = 0xE0–0xEF | unsigned char | 1 byte | - | Set<br>Get | | | |
| Dish-washing method setting acceptable information | 0xD3 | Indicates dish-washing method can be set using a bit mapping.<br>Bitmap of value can be written to the dish-washing method setting (EPC = 0xD0) | unsigned char x2 | 2 bytes | - | Get | | | |
| Drying method setting acceptable information | 0xD4 | Indicates drying method can be set using a bit mapping.<br>Bitmap of value can be written drying method setting (EPC = 0xD1) | unsigned char x2 | 2 bytes | - | Get | | | |



© 2000 - 2023 ECHONET Consortium

| | | | | | | | | | |
|---|---|---|---|---|---|---|---|---|---|
| Storing method setting acceptable information | 0xD5 | Indicates storing method can be set using a bit mapping.<br>Bitmap of value can be written to storing method setting (EPC = 0xD2) | unsigned char x2 | 2 bytes | - | Get | | | |
| Prewashing time setting | 0xD6 | Indicates prewashing time in an absolute setting or a relative setting from the automatic setting.<br>Absolute setting<br>Hour = 1st byte<br>0x00–0x17<br>Minute = 2nd byte<br>0x00–0x3B<br>Relative setting from the automatic setting<br>Automatic setting = 0xFFFF<br>Relative setting in the positive direction = 0xA001–0xA008<br>Relative setting in the negative direction = 0xC001–0xC008 | unsigned char x2 | 2 bytes | Hour<br>Min<br>ute | Set<br>Get | | | |
| Highest water temperature setting for prewashing | 0xD7 | Indicates the highest water temperature when prewashing in an absolute setting 1°C or a relative setting from the automatic setting.<br>Absolute setting<br>Water temperature = 0x00–0x64<br>Relative setting from the automatic setting<br>Automatic setting = 0xFF<br>Relative setting in the positive direction = 0xA1–0xA8<br>Relative setting in the negative direction = 0xC1–0xC8<br>Not to use warm water = 0xFE | unsigned char | 1 byte | °C | Set<br>Get | | | |
| Washing time setting | 0xD8 | Indicates washing time in an absolute setting or a relative setting from the automatic setting.<br>Absolute setting<br>Hour = 1st byte<br>0x00–0x17<br>Minute = 2nd byte<br>0x00–0x3B<br>Relative setting from the automatic setting<br>Automatic setting = 0xFFFF<br>Relative setting in the positive direction = 0xA001–0xA008<br>Relative setting in the negative direction = 0xC001–0xC008 | unsigned char x2 | 2 bytes | Hour<br>Min<br>ute | Set<br>Get | | | |



© 2000 - 2023 ECHONET Consortium

| | | | | | | | | | |
|---|---|---|---|---|---|---|---|---|---|
| Highest water temperature setting for washing | 0xD9 | Indicates the highest water temperature when washing in an absolute setting 1°C or a relative setting from the automatic setting.<br>Absolute setting<br>Water temperature = 0x00–0x64<br>Relative setting from the automatic setting<br>Automatic setting = 0xFF<br>Relative setting in the positive direction = 0xA1–0xA8<br>Relative setting in the negative direction = 0xC1–0xC8<br>Not to use warm water = 0xFE | unsigned char | 1 byte | °C | Set<br>Get | | | |
| Number of times of rinsing setting | 0xDA | Indicates number of rinsing.<br>Designation of number of operations= 0x00–0x08<br>Automatic = 0xFF | unsigned char | 1 byte | Number of times | Set<br>Get | | | |
| Rinsing mode setting | | Indicates rinsing modes. | unsigned | 4 bytes | - | Set | | | |



© 2000 - 2023 ECHONET Consortium

| | | | | | | | | | |
|---|---|---|---|---|---|---|---|---|---|
| | 0xDB | 1st rinsing = b3-0<br>Water rinsing = 0000<br>Hot water rinsing = 0001<br>Manufacturer-specific mode = 1000–1110<br>Automatic mode setting = 1111<br>2nd rinsing = b7–4<br>Water rinsing = 0000<br>Hot water rinsing = 0001<br>Manufacturer-specific mode = 1000–1110<br>Automatic mode setting = 1111<br>3rd rinsing = b11–8<br>Water rinsing = 0000<br>Hot water rinsing = 0001<br>Manufacturer-specific mode = 1000–1110<br>Automatic mode setting = 1111<br>4th rinsing = b15–12<br>Water rinsing = 0000<br>Hot water rinsing = 0001<br>Manufacturer-specific mode = 1000–1110<br>Automatic mode setting = 1111<br>5th rinsing = b19–16<br>Water rinsing = 0000<br>Hot water rinsing = 0001<br>Manufacturer-specific mode = 1000–1110<br>Automatic mode setting = 1111<br>6th rinsing = b23–20<br>Water rinsing = 0000<br>Hot water rinsing = 0001<br>Manufacturer-specific mode = 1000–1110<br>Automatic mode setting = 1111<br>7th rinsing = b27–24<br>Water rinsing = 0000<br>Hot water rinsing = 0001<br>Manufacturer-specific mode = 1000–1110<br>Automatic mode setting = 1111<br>8th rinsing = 31b–28<br>Water rinsing = 0000<br>Hot water rinsing = 0001<br>Manufacturer-specific mode = 1000–1110<br>Automatic mode setting = 1111 | char x4 | | | Get | | | |



© 2000 - 2023 ECHONET Consortium

| | | | | | | | | | |
|---|---|---|---|---|---|---|---|---|---|
| Highest water temperature setting for hot water rinsing | 0xDC | Indicates the highest water temperature when hot water rinsing in an absolute setting 1°C or a relative setting from the automatic setting.<br>Absolute setting<br>Water temperature = 0x00–0x64<br>Relative setting from the automatic setting<br>Automatic setting = 0xFF<br>Relative setting in the positive direction = 0xA1–0xA8<br>Relative setting in the negative direction = 0xC1–0xC8<br>Not to use warm water = 0xFE | unsigned char | 1 byte | °C | Set<br>Get | | | |
| Dish-washing water volume setting | 0xDD | Indicates dish-washing water volume setting in an absolute setting or a relative setting from the automatic setting.<br>Absolute setting<br>16 steps from the smallest to the largest = 0x31–0x40<br>Relative setting from the automatic setting<br>Automatic setting = 0xFF<br>Relative setting in the positive direction = 0xA1–0xA8<br>Relative setting in the negative direction = 0xC1–0xC8 | unsigned char | 1 byte | - | Set<br>Get | | | |
| Dish-washing water pressure setting | 0xDE | Indicates dish-washing water pressure setting in an absolute setting or a relative setting from the automatic setting.<br>Absolute setting<br>16 steps from the lowest to the highest = 0x31–0x40<br>Relative setting from the automatic setting<br>Automatic setting = 0xFF<br>Relative setting in the positive direction = 0xA1–0xA8<br>Relative setting in the negative direction = 0xC1–0xC8 | unsigned char | 1 byte | - | Set<br>Get | | | |
| Dish-washing level setting | 0xDF | Indicates dish-washing level setting in an absolute setting or a relative setting from the automatic setting.<br>Absolute setting<br>16 steps from the lowest to the highest = 0x31–0x40<br>Relative setting from the automatic setting<br>Automatic setting = 0xFF<br>Relative setting in the positive direction = 0xA1–0xA8<br>Relative setting in the negative direction = 0xC1–0xC8 | unsigned char | 1 byte | - | Set<br>Get | | | |



© 2000 - 2023 ECHONET Consortium

| | | | | | | | | | |
|---|---|---|---|---|---|---|---|---|---|
| Drying time setting | 0xE0 | Indicates drying time in an absolute setting or a relative setting from the automatic setting.<br>Absolute setting<br>Hour = 1st byte<br>0x00–0x17<br>Minute = 2nd byte<br>0x00–0x3B<br>Relative setting from the automatic setting<br>Automatic setting = 0xFFFF<br>Relative setting in the positive direction = 0xA001–0xA008<br>Relative setting in the negative direction = 0xC001–0xC008 | unsigned char x2 | 2 bytes | Hour<br>Minute | Set<br>Get | | | |
| Highest air temperature setting for hot air drying | 0xE1 | Indicates the highest air temperature when hot air drying in an absolute setting 1°C or a relative setting from the automatic setting.<br>Absolute setting<br>Air temperature = 0x00-0x96<br>Relative setting from the automatic setting<br>Automatic setting = 0xFF<br>Relative setting in the positive direction = 0xA1–0xA8<br>Relative setting in the negative direction = 0xC1–0xC8<br>Not to use hot air = 0xFE | unsigned char | 1 byte | ℃ | Set<br>Get | | | |
| Drying air flow rate setting | 0xE2 | Indicates drying air flow rate in an absolute setting or a relative setting from the automatic setting.<br>Absolute setting<br>16 steps from the smallest to the largest = 0x31–0x40<br>Relative setting from the automatic setting<br>Automatic setting = 0xFF<br>Relative setting in the positive direction = 0xA1–0xA8<br>Relative setting in the negative direction = 0xC1–0xC8 | unsigned char | 1 byte | - | Set<br>Get | | | |
| Drying level setting | 0xE3 | Indicates drying level setting in an absolute setting or a relative setting from the automatic setting. | unsigned char | 1 byte | - | Set<br>Get | | | |



© 2000 - 2023 ECHONET Consortium

| | | | | | | | | | |
|---|---|---|---|---|---|---|---|---|---|
| | | Absolute setting<br>16 steps from the lowest to the highest = 0x31–0x40<br>Relative setting from the automatic setting<br>Automatic setting = 0xFF<br>Relative setting in the positive direction = 0xA1–0xA8<br>Relative setting in the negative direction = 0xC1–0xC8 | | | | | | | |
| Storing time setting | 0xE4 | Indicates storing time in an absolute setting or a relative setting from the automatic setting.<br>Absolute setting<br>Day = 1st byte<br>0x00–0x07<br>Hour = 2nd byte<br>0x00–0x17<br>Minute = 3rd byte<br>0x00–0x3B<br>Relative setting from the automatic setting<br>Automatic setting = 0xFFFFFF<br>Relative setting in the positive direction = 0xA00001–0xA00008<br>Relative setting in the negative direction = 0xC00001-0xC00008 | unsigned char x3 | 3 bytes | Day<br>Hour<br>Min<br>ute | Set<br>Get | | | |
| Operation setting information | 0xE5 | This property indicates the result of reflecting setting properties for specified dish-washing method, drying method, and storing methods. | unsigned char x27 | 27 bytes | - | Get | | | |



© 2000 - 2023 ECHONET Consortium

| | | | | | | | | | |
|---|---|---|---|---|---|---|---|---|---|
| | | Valid item designation = 1st—4th byte<br>Bitmap indicates the valid items<br>Prewashing time setting = 5th—6th byte<br>Prewashing time setting (EPC = 0xD6) shall be referenced.<br>Highest water temperature setting for prewashing = 7th byte<br>Highest water temperature setting for prewashing (EPC = 0xD7) shall be referenced.<br>Washing time setting = 8th—9th byte<br>Washing time setting (EPC = 0xD8) shall be referenced.<br>Highest water temperature setting for washing = 10th byte<br>Highest water temperature setting for washing (EPC = 0xD9) shall be referenced.<br>Number of times of rinsing setting = 11th byte<br>Number of times of rinsing setting (EPC = 0xDA) shall be referenced.<br>Rinsing mode setting = 12th—15th byte<br>Rinsing mode setting (EPC = 0xDB) shall be referenced.<br>Highest water temperature setting for hot water rinsing = 16th byte<br>Highest water temperature setting for hot water rinsing (EPC = 0xDC) shall be referenced.<br>Dish-washing water volume setting = 17th byte<br>Dish-washing water volume setting (EPC = 0xDD) shall be referenced.<br>Dish-washing water pressure setting = 18th byte<br>Dish-washing water pressure setting (EPC = 0xDE) shall be referenced.<br>Dish-washing level setting = 19th byte<br>Dish-washing level setting (EPC = 0xDF) shall be referenced.<br>Drying time setting = 20th—21st byte<br>Drying time setting (EPC = 0xE0) shall be referenced.<br>Highest air temperature setting | | | | | | | |



© 2000 - 2023 ECHONET Consortium

| | | | | | | | | | |
|---|---|---|---|---|---|---|---|---|---|
| | | for hot air drying = 22nd byte<br>Highest air temperature setting for hot air drying (EPC = 0xE1) shall be referenced.<br>Drying air flow rate setting = 23rd byte<br>Drying air flow rate setting (EPC = 0xE2) shall be referenced.<br>Drying level setting = 24th byte<br>Drying level setting (EPC = 0xE3) shall be referenced.<br>Storing time setting = 25th—27th byte<br>Storing time setting (EPC = 0xE4) shall be referenced. | | | | | | | |



© 2000 - 2023 ECHONET Consortium

| | | | | | | | | | |
|---|---|---|---|---|---|---|---|---|---|
| Operation transition status | 0xE6 | Indicates dish-washing, drying, and storing status.<br>Before starting operation = 0x10<br>Before operation = 0x11<br>ON timer standing by = 0x14<br>Dish-washing ongoing = 0x30<br>Prewashing ongoing = 0x31<br>Washing ongoing = 0x34<br>Rinsing ongoing = 0x37<br>1st rinsing ongoing= 0xB1<br>2nd rinsing ongoing = 0xB2<br>3rd rinsing ongoing = 0xB3<br>4th rinsing ongoing = 0xB4<br>5th rinsing ongoing = 0xB5<br>6th rinsing ongoing = 0xB6<br>7th rinsing ongoing = 0xB7<br>8th rinsing ongoing = 0xB8<br>Dish-washing suspended = 0x3F<br>Drying ongoing = 0x50<br>Hot air drying ongoing = 0x51<br>Air drying ongoing = 0x54<br>Drying suspended = 0x5F<br>Storing ongoing = 0x70<br>Blowing ongoing = 0x71<br>Dehumidification ongoing = 0x74<br>Disinfection ongoing = 0x77<br>Storing suspended = 0x7F<br>Operation completed = 0x90<br>Manufacturer-specific state = 0xE0—0xEF<br>Unknown status = 0xFF | unsigned char | 1 byte | - | Get | ○ | ○ | |
| Remaining time on the ON timer | 0xE7 | Indicates remaining time of ON timer.<br>Remaining time unknown<br>0xFFFF<br>Remaining time identified<br>Hour = 1st byte<br>0x00–0xFE<br>Minute = 2nd byte<br>0x00–0x3B | unsigned char x2 | 2 bytes | Hour Minute | Get | | | |
| Remaining time of prewashing | 0xE8 | Indicates remaining time for prewashing.<br>Remaining time unknown<br>0xFFFF<br>Remaining time identified<br>Hour = 1st byte<br>0x00–0xFE<br>Minute = 2nd byte<br>0x00–0x3B | unsigned char x2 | 2 bytes | Hour Minute | Get | | | |
| Remaining time of washing | 0xE9 | Indicates remaining time for washing. | unsigned char x2 | 2 bytes | Hour Minu | Get | | | |



© 2000 - 2023 ECHONET Consortium

| | | | | | | | | | |
|---|---|---|---|---|---|---|---|---|---|
| | | Remaining time unknown<br>0xFFFF<br>Remaining time identified<br>Hour = 1st byte<br>0x00–0xFE<br>Minute = 2nd byte<br>0x00–0x3B | | | te | | | | |

| | | | | | | | | | |
|---|---|---|---|---|---|---|---|---|---|
| Remaining time for rinsing | 0xEA | Indicates remaining time for rinsing.<br>Remaining time unknown<br>0xFFFF<br>Remaining time identified<br>Hour = 1st byte<br>0x00–0xFE<br>Minute = 2nd byte<br>0x00–0x3B | unsigned char x2 | 2 bytes | Hour Min ute | Get | | | |
| Remaining time of dish-washing | 0xEB | Indicates remaining time of dish-washing.<br>Remaining time unknown<br>0xFFFF<br>Remaining time identified<br>Hour = 1st byte<br>0x00–0xFE<br>Minute = 2nd byte<br>0x00–0x3B | unsigned char x2 | 2 bytes | Hour Min ute | Get | | | |
| Remaining drying time | 0xEC | Indicates remaining time of drying.<br>Remaining time unknown<br>0xFFFF<br>Remaining time identified<br>Hour = 1st byte<br>0x00–0xFE<br>Minute = 2nd byte<br>0x00–0x3B | unsigned char x2 | 2 bytes | Hour Minu te | Get | | | |
| Remaining time of dish-washing and drying | 0xED | Indicates remaining time of washing and drying.<br>Remaining time unknown<br>0xFFFF<br>Remaining time identified<br>Hour = 1st byte<br>0x00–0xFE<br>Minute = 2nd byte<br>0x00–0x3B | unsigned char x2 | 2 bytes | Hour Minu te | Get | | | |
| Storing elapsed time | 0xEE | Indicates elapsed time for storing.<br>Remaining time unknown<br>0xFFFFFF<br>Remaining time identified<br>Day = 1st byte<br>0x00–0xFE<br>Hour = 2nd byte<br>0x00–0x17<br>Minute = 3rd byte<br>0x00–0x3B | unsigned char x3 | 3 bytes | Day Ho ur Minu te | Get | | | |



© 2000 - 2023 ECHONET Consortium

| | | | | | | | | | | |
|---|---|---|---|---|---|---|---|---|---|---|
| Used water volume | 0xEF | Indicates that water volume measured from the start of the operation shall be indicated as 0.01l.<br>Used water volume identified 0x0000–0xFFFE<br>Unknown water volume used 0xFFFF | unsigned short | 2 bytes | 0.01l | Get | | | |

Note: In the "Announcement at status change" column, ○ denotes mandatory processing when the property is implemented.

(1) Operation status (inherited from the device object super class property)

The "ON" state shall be a state where the dishwasher and dryer is ready to respond to user operation. The "OFF" state shall be a state that the dishwasher and dryer is not ready to respond to user operation.

In cases where a node in which this class is implemented is ready to respond to user operation as soon as the node starts up, this property may be implemented as it is fixed to ON. "ON" shall be indicated as 0x30, while "OFF" is indicated as 0x31.

(2) ON timer reservation setting

This property sets/acquires whether the dishwasher and dryer stands by for a certain time before operation starts. The setting in which the dishwasher and dryer stand by for a certain time until operation starts shall be defined as "reservation ON". The setting in which the dishwasher and dryer starts operation immediately shall be defined as "reservation OFF". This property shall be related to the "ON timer setting" (EPC = 0x91) or "relative time-based ON timer setting" (EPC = 0x92). The "Reservation ON" shall be indicated as 0x41, while the "reservation OFF" is indicated as 0x42.

(3) ON timer setting

When the ON timer reservation setting (EPC = 0x90) is reservation ON (property value = 0x41), the time that operation starts shall be set to/acquired from: hour 0—23 (0x00—0x17) and minute 0—59 (0x00—0x3B). The higher- and lower-order bytes shall be used for the "hour" and "minute" values, respectively. If the time is not set, it shall be indicated as "0xFFFF".

(4) Relative time-based ON timer setting

When ON timer reservation setting (EPC = 0x90) is reservation ON (property value = 0x41), the stand by time before operation starts shall be set to/acquired from: hour 0—255 (0x00—0xFF) and minute 0—59 (0x00—0x3B). The higher- and lower-order bytes shall be used for the "hour" and "minute" values, respectively. The 0 hour 0 minute means that the ON timer reservation is invalid, as with the cases where the ON timer reservation setting (EPC = 0x90) is reservation OFF (property value = 0x42).



© 2000 - 2023 ECHONET Consortium

(5) Door/cover open/close setting

This property sets/acquires door/cover open/close status. The state where the door/cover is closed shall be defined as “door/cover closed”. The state where the door/cover is opened shall be defined as “door/cover opened”. The “door/cover open” shall be indicated as 0x41, while the “door/cover closed” is indicated as 0x42.

(6) Door/cover lock setting

This property sets/acquires door/cover lock/unlock status. The state where the door/cover is locked shall be defined as “door/cover locked”. The state where the door/cover is unlocked shall be defined as “door/cover unlocked”. The “locked” shall be indicated as 0x41, while the “unlocked” is indicated as 0x42.

(7) Operation status setting

This property sets/acquires operation status. The state where the device operates or is operating shall be defined as operation start/resume or “operation ongoing”. The state where the device can suspend operation or resume operation from the middle of the operation shall be defined as “operation suspended”.

The state where the device finishes operation or where no operation is shall be defined as “operation stopped”. The “operation start/resume/operation ongoing” shall be indicated as 0x41, while operation suspended is indicated as 0x42, and operation stopped is indicated as 0x43.

(8) Dish-washing method setting

This property sets/acquires dish-washing method. As shown below, 11 patterns of washing methods shall be defined.

[1] Dish-washing operation OFF (property value = 0x40)

Operations for drying or storing shall be performed while not performing dish-washing.

[2] Standard (property value = 0x41)

Operations shall be performed with the most standard dish-washing method for nodes in which this class is implemented.

[3] Silent (property value = 0x42)

Operation shall be performed with a dish-washing method focused on washing method at an operation noise level that is lower than that of the “standard” operation.

[4] Heavily stained (property value = 0x43)

Operation shall be performed with a dish-washing method focused on removing stains with



© 2000 - 2023 ECHONET Consortium

more heavily stained than standard.

[5] Hard-to-remove stains (property value = 0x44)

Operation shall be performed with a dish-washing method focused on removing stains with more heavily stained than heavily stained.

(6) Soft (property value = 0x45)

Operations shall be performed with a dish-washing method focused on not damaging dishes due to water injection and heat.

[7] Lightly stained (property value = 0x46)

Operation shall be performed with a washing method focused on removing stains from dishes with more lightly stained than standard.

[8] Quick wash of small number of dishes (property value = 0x47)

Operations shall be performed with a dish-washing method focused on removing stains with a lower number of dishes in a shorter time.

[9] Rinsing only (property value = 0x48)

Operation shall be performed with a dish-washing method focused on rinsing dishes.

[10] Disinfection (property value = 0x49)

Operation shall be performed with a dish-washing method focused on disinfection.

[11] Maintenance (property value = 0x4F)

Operation shall be performed with a washing method focused on removing stains from the dishwasher and dryer itself.

When implementing dish-washing methods not fall into any of the above, this property sets/acquires dish-washing methods within the range of manufacturer-specific settings (property value = 0xE0—0xEF).

(9) Drying method setting

This property sets/acquires drying method. As shown below, 10 patterns of drying methods shall be defined.

[1] Drying operation OFF (property value = 0x80)

Operation for dish-washing or storing shall be performed while not to perform drying.

[2] Very low (property value = 0x81)

Operations shall be performed with a drying method using heat and time smaller than “low”.

[3] Low (property value = 0x82)

Operation shall be performed with a drying method using heat and time smaller than “standard”.

[4] Standard (property value = 0x83)



© 2000 - 2023 ECHONET Consortium

Operation shall be performed with the most standard drying method for nodes in which this class is implemented.

[5] Soft (property value = 0x84)

Operation shall be performed with a drying method focused on not damaging dishes due to blowing and heat.

[6] High (property value = 0x85)

Operation shall be performed with a drying method using heat and time larger than “standard”.

[7] Very high (property value = 0x86)

Operation shall be performed with a drying method using heat and time smaller than “high”.

[8] Designated time (property value = 0x87)

Operations shall be performed with a drying method that dries dishes for a designated time only.

[9] Drying only (property value = 0x88)

Operations shall be performed with a drying method focused on drying and warming up dishes.

[10] Drying inside (property value = 0x8F)

Operations shall be performed with a drying method focused on drying the dishwasher and dryer itself.

When implementing drying methods not fall into any of the above, this property sets/acquires drying methods within the range of manufacturer-specific settings (property value = 0xE0—0xEF).

(10) Storing method setting

This property sets/acquires storing method. As shown below, 4 patterns of dish storing methods shall be defined.

[1] Storing operation OFF (property value = 0xC0)

Operation for dish-washing or drying shall be performed while not to perform storing.

[2] Blowing (property value = 0xC1)

Operations shall be performed with a storing method by blowing dishes.

[3] Dehumidifying (property value = 0xC2)

Operation shall be performed with a storing method focused on removing moisture attached to the dishes.

[4] Disinfection (property value = 0xC3)

Operation shall be performed with a storing method focused on eliminating saprophytes.

When implementing storing methods not fall into any of the above, this property sets/acquires storing methods within the range of manufacturer-specific settings (property value = 0xE0—0xEF).



© 2000 - 2023 ECHONET Consortium

(11) Dish-washing method setting acceptable information

The acceptable methods for dish-washing method setting (EPC=0xD0) are shown in this property by a bitmap. When the 1 bit assigned property map of the dish-washing method setting (EPC = 0xD0) is 1, the property value can be set. When the 1 bit assigned property map of dish-washing method setting (EPC = 0xD0) is 0, the property value cannot be set.

| | b7 | b6 | b5 | b4 | b3 | b2 | b1 | b0 |
|---|---|---|---|---|---|---|---|---|
| 1st byte | 0x47 | 0x46 | 0x45 | 0x44 | 0x43 | 0x42 | 0x41 | 0x40 |
| 2nd byte | 0x4F | 0x4E | 0x4D | 0x4C | 0x4B | 0x4A | 0x49 | 0x48 |

(12) Drying method setting acceptable information

The acceptable methods for drying method setting (EPC=0xD1) are shown in this property by a bitmap. When the 1 bit assigned property map of drying method setting (EPC = 0xD1) is 1, the property value can be set. When the 1 bit assigned property map of drying method setting (EPC = 0xD1) is 0, the property value cannot be set.

| | b7 | b6 | b5 | b4 | b3 | b2 | b1 | b0 |
|---|---|---|---|---|---|---|---|---|
| 1st byte | 0x87 | 0x86 | 0x85 | 0x84 | 0x83 | 0x82 | 0x81 | 0x80 |
| 2nd byte | 0x8F | 0x8E | 0x8D | 0x8C | 0x8B | 0x8A | 0x89 | 0x88 |

(13) Storing method setting acceptable information

The acceptable methods for storing method setting (EPC=0xD2) are shown in this property by a bitmap. When the 1 bit assigned property map of storing method setting (EPC = 0xD2) is 1, the property value can be set. When the 1 bit assigned property map of storing method setting (EPC = 0xD2) is 0, the property value cannot be set.

| | b7 | b6 | b5 | b4 | b3 | b2 | b1 | b0 |
|---|---|---|---|---|---|---|---|---|
| 1st byte | 0xC7 | 0xC6 | 0xC5 | 0xC4 | 0xC3 | 0xC2 | 0xC1 | 0xC0 |
| 2nd byte | 0xCF | 0xCE | 0xCD | 0xCC | 0xCB | 0xCA | 0xC9 | 0xC8 |

(14) Prewashing time setting

This property resets/acquires prewashing time that is set with the dish-washing method setting (EPC = 0xD0). Indicates prewashing time in two ways: <absolute setting> and <relative setting from the automatic setting>.



© 2000 - 2023 ECHONET Consortium

<Absolute setting>

The prewashing time shall be indicated as hour 0—23 (0x00—0x17) and minute 0—59 (0x00—0x3B). The “0 hour 0 minute” shall mean that no prewashing operation takes place. The higher- and lower-order bytes shall be used for the “hour” and “minute” values, respectively.

<Relative setting from the automatic setting>

When setting the time that is set with the dish-washing method setting (EPC = 0xD0), it shall be indicated as 0xFFFF. The range can be set for the relative setting in the positive direction shall be from 1 to 8 (0xA001–0xA008). The range can be set for the relative setting in the negative direction shall be from 1 to 8 (0xC001–0xC008). The amount of change per step for relative settings in the positive and negative directions shall depend on individual devices, and is not stipulated by this property.

(15) Highest water temperature setting for prewashing

This property resets/acquires the highest water temperature for prewashing that is set with dish-washing method setting (EPC = 0xD0). If the device fails to achieve the temperature set by this property, it shall depend on individual devices, and not stipulated by this property. Indicates the highest water temperature for prewashing in two ways: <absolute setting> and <relative setting from the automatic setting>.

<Absolute setting>

The highest water temperature for prewashing shall be indicated from 0 to 100 (0x00—0x64)°C.

<Relative setting from the automatic setting>

When setting the temperature that is set with dish-washing method setting (EPC = 0xD0), it shall be indicated as 0xFF. The range can be set for the relative setting in the positive direction shall be from 1 to 8 (0xA1–0xA8). The range can be set for the relative setting in the negative direction shall be from 1 to 8 (0xC1–0xC8). The amount of change per step for relative settings in the positive and negative directions shall depend on individual devices, and is not stipulated by this property. If not using hot water, the property value shall be indicated as 0xFE.

(16) Washing time setting

This property resets/acquires washing time that is set with dish-washing method setting (EPC = 0xD0). Indicates washing time in two ways: <absolute setting> and <relative setting from the automatic setting>.

<Absolute setting>



© 2000 - 2023 ECHONET Consortium

The washing time shall be indicated as hour 0—23 (0x00—0x17) and minute 0—59 (0x00—0x3B). The “0 hour 0 minute” shall mean that no washing operation takes place. The higher- and lower-order bytes shall be used for the “hour” and “minute” values, respectively.

<Relative setting from the automatic setting>

When setting the time that is set with the dish-washing method setting (EPC = 0xD0), it shall be indicated as 0xFFFF. The range can be set for the relative setting in the positive direction shall be from 1 to 8 (0xA001–0xA008). The range can be set for the relative setting in the negative direction shall be from 1 to 8 (0xC001–0xC008). The amount of change per step for relative settings in the positive and negative directions shall depend on individual devices, and is not stipulated by this property.

(17) Highest water temperature setting for washing

This property resets/acquires the highest water temperature for washing that is set with dish-washing method setting (EPC = 0xD0). If the device fails to achieve the temperature set by this property, it shall depend on individual devices, and not stipulated by this property. Indicates the highest water temperature for washing in two ways: <absolute setting> and <relative setting from the automatic setting>.

<Absolute setting>

The highest water temperature for washing shall be indicated from 0 to 100 (0x00—0x64)°C.

<Relative setting from the automatic setting>

When setting the temperature that is set with dish-washing method setting (EPC = 0xD0), it shall be indicated as 0xFF. The range can be set for the relative setting in the positive direction shall be from 1 to 8 (0xA1–0xA8). The range can be set for the relative setting in the negative direction shall be from 1 to 8 (0xC1–0xC8). The amount of change per step for relative settings in the positive and negative directions shall depend on individual devices, and is not stipulated by this property. If not using hot water, the property value shall be indicated as 0xFE.

(18) Number of times of rinsing setting

This property resets/acquires number of rinsing that is set with dish-washing method setting (EPC = 0xD0). The range that can be set shall be from 0 to 8 times (0x00—0x08). The “0 time” shall mean that no rinsing operation takes place. When setting the number of time that is set with dish-washing method setting (EPC = 0xD0), it shall be indicated as 0xFF.

(19) Rinsing mode setting



© 2000 - 2023 ECHONET Consortium

This property resets/acquires rinsing mode that is set with dish-washing method setting (EPC = 0xD0). Four bits shall be used for each rinsing mode to be operated for rinsing as specified below. The table below shows the bitmapping. When the four bits designated for rinsing are 0000, the rinsing shall be operated with cold water rinsing. When the four bits designated for rinsing is 0001, the rinsing shall be operated with hot water rinsing. If the device fails to achieve the rinsing mode set by this property, it shall depend on individual devices, and not stipulated by this property. When implementing rinsing modes not fall into any of the above, this property sets/acquires rinsing modes within the range of manufacturer-specific mode (property value = 1000—1110). When operating rinsing mode that is set with dish-washing method setting (EPC = 0xD0), it shall be indicated as 1111.

The rinsing mode o at the positions larger than the value in number of times of rinsing setting (EPC = 0xDA) shall be padded with 1111. In case the rinsing modes at the positions larger than the value in number of times of rinsing setting (EPC = 0xDA) are re-set, the modes shall be ignored.

| | b7 | b6 | b5 | b4 | b3 | b2 | b1 | b0 |
|---|---|---|---|---|---|---|---|---|
| 1st byte | 2nd rinsing | | | | 1st rinsing | | | |
| 2nd byte | 4th rinsing | | | | 3rd rinsing | | | |
| 3rd byte | 6th rinsing | | | | 5th rinsing | | | |
| 4th byte | 8th rinsing | | | | 7th rinsing | | | |

(20) Highest water temperature setting for hot water rinsing

This property resets/acquires highest water temperature for hot water rinsing that is set with dish-washing method setting (EPC = 0xD0). If the device fails to achieve the temperature set by this property, it shall depend on individual devices, and not stipulated by this property. Indicates the highest water temperature for hot water rinsing in two ways: <absolute setting> and <relative setting from the automatic setting>.

<Absolute setting>

The highest water temperature for hot water rinsing shall be indicated from 0 to 100 (0x00—0x64)°C.

<Relative setting from the automatic setting>

When setting the temperature that is set with dish-washing method setting (EPC = 0xD0), it shall be indicated as 0xFF. The range can be set for the relative setting in the positive direction shall be from 1 to 8 (0xA1–0xA8). The range can be set for the relative setting in the negative direction shall be from 1 to 8 (0xC1–0xC8). The amount of change per step for relative settings in the positive and negative directions shall depend on individual devices, and is not stipulated by this property. If not using hot water, the property value shall be indicated as 0xFE.



© 2000 - 2023 ECHONET Consortium

(21) Dish-washing water volume setting

This property resets/acquires dish-washing water volume that is set with dish-washing method setting (EPC = 0xD0). Indicates dish-washing water volume in two ways: <absolute setting> and <relative setting from the automatic setting>.

<Absolute setting>

Indicates dish-washing water volume in 16 steps from the smallest to the largest: from 1 to 16 (0x31—0x40). The amount of change per step shall depend on individual devices, and it is not stipulated by this property.

<Relative setting from the automatic setting>

When setting the dish-washing water volume that is set with dish-washing method setting (EPC = 0xD0) it shall be indicated as, 0xFF. The range can be set for the relative setting in the positive direction shall be from 1 to 8 (0xA1–0xA8). The range can be set for the relative setting in the negative direction shall be from 1 to 8 (0xC1–0xC8). The amount of change per step for relative settings in the positive and negative directions shall depend on individual devices, and is not stipulated by this property.

(22) Dish-washing water pressure setting

This property resets/acquires dish-washing water pressure that is set with dish-washing method setting (EPC = 0xD0). Indicates dish-washing water pressure in two ways: <absolute setting> and <relative setting from the automatic setting>.

<Absolute setting>

Indicates dish-washing water pressure in 16 steps from the lowest to the highest: from 1 to 16 (0x31—0x40). The amount of change per step shall depend on individual devices, and it is not stipulated by this property.

<Relative setting from the automatic setting>

When setting the dish-washing water pressure that is set with dish-washing method setting (EPC = 0xD0) it shall be indicated as, 0xFF. The range can be set for the relative setting in the positive direction shall be from 1 to 8 (0xA1–0xA8). The range can be set for the relative setting in the negative direction shall be from 1 to 8 (0xC1–0xC8). The amount of change per step for relative settings in the positive and negative directions shall depend on individual devices, and is not stipulated by this property.

(23) Dish-washing level setting



© 2000 - 2023 ECHONET Consortium

This property resets/acquires dish-washing level that is set with dish-washing method setting (EPC = 0xD0). Changing dish-washing level can make fine adjustments in the level of stains that can be removed with the operation. The method for adjusting the stain level that can be removed by changing water volume, heat, and time shall depend on individual devices, and it is not stipulated by this property. Indicates dish-washing level in two ways: <absolute setting> and <relative setting from the automatic setting>.

<Absolute setting>

Indicates dish-washing level in 16 steps from the lowest to the highest: from 1 to 16 (0x31—0x40). The amount of change per step shall depend on individual devices, and it is not stipulated by this property.

<Relative setting from the automatic setting>

When setting the dish-washing level and that is set with dish-washing method setting (EPC = 0xD0), it shall be indicated as 0xFF. The range can be set for the relative setting in the positive direction shall be from 1 to 8 (0xA1–0xA8). The range can be set for the relative setting in the negative direction shall be from 1 to 8 (0xC1–0xC8). The amount of change per step for relative settings in the positive and negative directions shall depend on individual devices, and is not stipulated by this property.

(24) Drying time setting

This property resets/acquires drying time that is set with drying method setting (EPC = 0xD1). Indicates drying time in two ways: <absolute setting> and <relative setting from the automatic setting>.

<Absolute setting>

The drying time shall be indicated as hour 0—23 (0x00—0x17) and minute 0—59 (0x00—0x3B). The “0 hour 0 minute” shall mean that no drying operation takes place. The higher- and lower-order bytes shall be used for the “hour” and “minute” values, respectively.

<Relative setting from the automatic setting>

When setting the time that is set with drying method setting (EPC = 0xD1), it shall be indicated as 0xFFFF. The range can be set for the relative setting in the positive direction shall be from 1 to 8 (0xA001–0xA008). The range can be set for the relative setting in the negative direction shall be from 1 to 8 (0xC001–0xC008). The amount of change per step for relative settings in the positive and negative directions shall depend on individual devices, and is not stipulated by this property.

(25) Highest air temperature setting for hot air drying



© 2000 - 2023 ECHONET Consortium

This property resets/acquires highest air temperature for hot air drying that is set drying method setting (EPC = 0xD1). If the device fails to achieve the temperature set by this property, it shall depend on individual devices, and not stipulated by this property. Indicates the highest air temperature for hot air drying in two ways: <absolute setting> and <relative setting from the automatic setting>.

<Absolute setting>

The highest air temperature for hot air drying shall be indicated from 0 to 120 (0x00—0x96)°C.

<Relative setting from the automatic setting>

When setting the temperature that is set with drying method setting (EPC = 0xD1), it shall be indicated as 0xFF. The range can be set for the relative setting in the positive direction shall be from 1 to 8 (0xA1–0xA8). The range can be set for the relative setting in the negative direction shall be from 1 to 8 (0xC1–0xC8). The amount of change per step for relative settings in the positive and negative directions shall depend on individual devices, and is not stipulated by this property. If not using hot air, the property value shall be indicated as 0xFE.

(26) Drying air flow rate setting

This property resets/acquires drying air flow rate that is set with drying method setting (EPC = 0xD1). Indicates drying air flow rate in two ways: <absolute setting> and <relative setting from the automatic setting>.

<Absolute setting>

Indicates drying air flow rate in 16 steps from the smallest to the largest: from 1 to 16 (0x31—0x40). The amount of change per step shall depend on individual devices, and it is not stipulated by this property.

<Relative setting from the automatic setting>

When setting the air flow rate that is set with drying method setting (EPC = 0xD1), it shall be indicated as 0xFF. The range can be set for the relative setting in the positive direction shall be from 1 to 8 (0xA1–0xA8). The range can be set for the relative setting in the negative direction shall be from 1 to 8 (0xC1–0xC8). The amount of change per step for relative settings in the positive and negative directions shall depend on individual devices, and is not stipulated by this property.

(27) Drying level setting

This property resets/acquires drying level that is set with drying method setting (EPC = 0xD1). Changing drying level can make fine adjustments water and moisture volume that can be removed with



© 2000 - 2023 ECHONET Consortium

the operation. The method for adjusting water and moisture volume can be removed by changing air flow rate, heat, and time shall depend on individual devices, and it is not stipulated by this property. Indicates drying level in two ways: <absolute setting> and <relative setting from the automatic setting>.

<Absolute setting>

Indicates drying level in 16 steps from the lowest to the highest: from 1 to 16 (0x31—0x40). The amount of change per step shall depend on individual devices, and it is not stipulated by this property.

<Relative setting from the automatic setting>

When setting the drying level that is set with drying method setting (EPC = 0xD1), it shall be indicated as 0xFF. The range can be set for the relative setting in the positive direction shall be from 1 to 8 (0xA1–0xA8). The range can be set for the relative setting in the negative direction shall be from 1 to 8 (0xC1–0xC8). The amount of change per step for relative settings in the positive and negative directions shall depend on individual devices, and is not stipulated by this property.

(28) Storing time setting

This property resets/acquires storing time that is set with storing method setting (EPC = 0xD2). Indicates storing time in two ways: <absolute setting> and <relative setting from the automatic setting>.

<Absolute setting>

The storing time shall be indicated as day 0—7 (0x00—0x07), hour 0—23 (0x00—0x17), and minute (0x00—0x3B). The “0 days 0 hours 0 minute” shall mean that no storing operation takes place. The higher- and lower-order bytes shall be used for the “day”, “hour” and “minute” values, respectively.

<Relative setting from the automatic setting>

When setting the time that is set with storing method setting (EPC = 0xD2), it shall be indicated as 0xFFFFFF. The range can be set for the relative setting in the positive direction shall be from 1 to 8 (0xA00001–0xA00008). The range can be set for the relative setting in the negative direction shall be from 1 to 8 (0xC00001–0xC00008). The amount of change per step for relative settings in the positive and negative directions shall depend on individual devices, and is not stipulated by this property.

(29) Operation setting information

This property is used to acquire the operation modes set in dish-washing method setting (EPC = 0xD0), drying method setting (EPC = 0xD1), and storing method setting (EPC = 0xD2), with additional settings reflected from prewashing (EPC = 0xD7), washing time setting (EPC = 0xD8), highest water temperature setting for washing (EPC = 0xD9), number of times of rinsing setting (EPC = 0xDA),



© 2000 - 2023 ECHONET Consortium

rinsing mode setting (EPC = 0xDB), highest water temperature setting for hot water rinsing (EPC = 0xDC), dish-washing water volume setting (EPC = 0xDD), dish-washing water pressure setting (EPC = 0xDE), dish-washing level setting (EPC = 0xDF), drying time setting (EPC = 0xE0), highest air temperature setting for hot air drying (EPC = 0xE1), drying air flow rate setting (EPC = 0xE2), drying level setting (EPC = 0xE3), and storing time setting (EPC = 0xE4).

The "Table: Operation setting information arrangement" shows the description of this property. The 1st, 2nd, 3rd, and 4th byte show which operation setting is valid with bitmapping. When the 1 bit assigned to the property is 1, this means that the property is implemented and valid.

When the 1 bit assigned the property is 0, this means that the property is not implemented and invalid. The property values considered as invalid for the 1st, 2nd, 3rd, and 4th byte shall be "don't care". Specifically, the value can be fixed to 0xFF.

It is required to acquire appropriate values for the property values considered as valid for 1st, 2nd, 3rd, and 4th byte.

Table: Operation setting information arrangement

| | b7 | b6 | b5 | b4 | b3 | b2 | b1 | b0 |
|---|---|---|---|---|---|---|---|---|
| 1st byte | Dish-washing water volume setting | Highest water temperature setting for hot water rinsing | Rinsing mode setting | Number of times of rinsing setting | Highest water temperature setting for washing | Washing time setting | Highest water temperature setting for prewashing | Prewashing time setting |
| 2nd byte | Reserved for future use | Storing time setting | Drying level setting | Drying air flow rate setting | Highest air temperature setting for hot air drying | Drying time setting | Dish-washing level setting | Dish-washing water pressure setting |
| 3rd and 4th byte | Reserved for future use | | | | | | | |
| 5th and 6th byte | Prewashing time setting (EPC = 0xD6) | | | | | | | |
| 7th byte | Highest water temperature setting for prewashing (EPC = 0xD7) | | | | | | | |
| 8th and 9th byte | Washing time setting (EPC = 0xD8) | | | | | | | |
| 10th byte | Highest water temperature setting for washing (EPC = 0xD9) | | | | | | | |
| 11th byte | Number of times of rinsing setting (EPC = 0xDA) | | | | | | | |
| 12th, | Rinsing mode setting (EPC = 0xDB) | | | | | | | |



© 2000 - 2023 ECHONET Consortium

| | |
|---|---|
| 13th, 14th, and 15th byte | |
| 16th byte | Highest water temperature setting for hot water rinsing (EPC = 0xDC) |
| 17th byte | Dish-washing water volume setting (EPC = 0xDD) |
| 18th byte | Dish-washing water pressure setting (EPC = 0xDE) |
| 19th byte | Dish-washing level setting (EPC = 0xDF) |
| 20th and 21st byte | Drying time setting (EPC = 0xE0) |
| 22nd byte | Highest air temperature setting for hot air drying (EPC = 0xE1) |
| 23rd byte | Drying air flow rate setting (EPC = 0xE2) |
| 24th byte | Drying level setting (EPC = 0xE3) |
| 25th, 26th, and 27th byte | Storing time setting (EPC = 0xE4) |

(30) Operation transition status

This property acquires operation transition status of nodes implementing this class. “Table: Pattern of property values” shows the property value patterns of this property. The operation transition status patterns that can be acquired by this property shall depend on individual devices. Specifically, for rinsing ongoing for dish-washing ongoing, this property acquires 1st rinsing ongoing (property value = 0xB1) and 2nd rinsing ongoing (property value = 0xB2) in detail. However, for storing ongoing, it is possible to acquire storing ongoing (property value = 0x70) only. Operation completed (property value = 0x90) is a status that is after all operations are completed. When events such as opening the door or accepting operation, transition shall occur from operation completed (property value = 0x90) to before starting operation (property value = 0x10) or before operation (property value = 0x11). When implementing operation transition status not falling into the stipulated operation transition status, the operation transition status shall be acquired within a range of manufacturer-specific statuses (property value = 0xE0—0xEF). When there is a failure to acquire operation transition status, it shall be indicated as 0xFF.

“Table: Relationship with operation status setting (EPC = 0xB2)” shows the relationship between this property and operation status setting (EPC = 0xB2).



© 2000 - 2023 ECHONET Consortium

Table: Pattern of property values

| | | |
|---|---|---|
| Before starting operation (property value = 0x10) | Before operation (property value = 0x11) | |
| | ON timer standing by (property value= 0x14) | |
| Dish-washing ongoing (property value = 0x30) | Prewashing ongoing (property value = 0x31) | |
| | Washing ongoing (property value = 0x34) | |
| | Rinsing ongoing (property value = 0x37) | 1st rinsing ongoing (property value = 0xB1) |
| | | 2nd rinsing ongoing (property value = 0xB2) |
| | | 3rd rinsing ongoing (property value = 0xB3) |
| | | 4th rinsing ongoing (property value = 0xB4) |
| | | 5th rinsing ongoing (property value = 0xB5) |
| | | 6th rinsing ongoing (property value = 0xB6) |
| | | 7th rinsing ongoing (property value = 0xB7) |
| | | 8th rinsing ongoing (property value = 0xB8) |
| | Dish-washing suspended (property value = 0x3F) | |
| Drying ongoing (property value = 0x50) | Hot air drying ongoing (property value = 0x51) | |
| | Air dry ongoing (property value = 0x54) | |
| | Drying suspended (property value = 0x5F) | |
| Storing ongoing (property value = 0x70) | Blowing ongoing (property value = 0x71) | |
| | Dehumidification ongoing (property value = 0x74) | |
| | Disinfection ongoing (property value = 0x77) | |
| | Storing suspended (property value = 0x7F) | |
| Operation completed (property value = 0x90) | | |

Table: Relationship with operation status setting (EPC = 0xB2)

| This property | Operation mode setting (EPC = 0xB2) |
|---|---|
| Before starting operation (property value = 0x10),<br>Before operation (property value = 0x11),<br>ON timer standing by (property value= 0x14),<br>Operation completed (property value = 0x90) | Operation stopped (property value = 0x43) |
| Dish-washing ongoing (property value = 0x30),<br>Prewashing ongoing (property value = 0x31),<br>Washing ongoing (property value = 0x34),<br>Rinsing ongoing (property value = 0x37), | Start/resume or operation ongoing (property value = 0x41) |



© 2000 - 2023 ECHONET Consortium

| | |
|---|---|
| 1st rinsing ongoing (property value = 0xB1),<br>2nd rinsing ongoing (property value = 0xB2),<br>3rd rinsing ongoing (property value = 0xB3),<br>4th rinsing ongoing (property value = 0xB4),<br>5th rinsing ongoing (property value = 0xB5),<br>6th rinsing ongoing (property value = 0xB6),<br>7th rinsing ongoing (property value = 0xB7),<br>8th rinsing ongoing (property value = 0xB8),<br>Drying ongoing (property value = 0x50),<br>Hot air drying ongoing (property value = 0x51),<br>Air drying ongoing (property value = 0x54),<br>Storing ongoing (property value = 0x70),<br>Blowing ongoing (property value = 0x71),<br>Dehumidification ongoing (property value = 0x74),<br>Disinfection ongoing (property value = 0x77) | |
| Dish-washing suspended (property value = 0x3F),<br>Drying suspended (property value = 0x5F),<br>Storing suspended (property value = 0x7F) | Operation suspended (property value = 0x42) |

(31) Remaining time on the ON timer

Used to acquire the remaining time on the ON timer until the operation starts. The remaining time shall be indicated as hours 0—254 (0x00—0xFE) and minutes 0—59 (0x00—0x3B). The higher- and lower-order bytes shall be used for the “hour” and “minute” values, respectively. In case the remaining time cannot be provided, it shall be indicated as 0xFFFF.

(32) Remaining time of prewashing

Used to acquire the remaining prewashing time. The remaining time shall be indicated as hours 0—254 (0x00—0xFE) and minutes 0—59 (0x00—0x3B). The higher- and lower-order bytes shall be used for the “hour” and “minute” values, respectively. In case the remaining time cannot be provided, it shall be indicated as 0xFFFF.

(33) Remaining time of washing

Used to acquire the remaining washing time. The remaining time shall be indicated as hours 0—254 (0x00—0xFE) and minutes 0—59 (0x00—0x3B). The higher- and lower-order bytes shall be used for the “hour” and “minute” values, respectively. In case the remaining time cannot be provided, it shall be indicated as 0xFFFF.



© 2000 - 2023 ECHONET Consortium

(34) Remaining time for rinsing

Used to acquire the remaining rinsing time. The remaining time shall be indicated as hours 0—254 (0x00—0xFE) and minutes 0—59 (0x00—0x3B). The higher- and lower-order bytes shall be used for the “hour” and “minute” values, respectively. In case the remaining time cannot be provided, it shall be indicated as 0xFFFF.

(35) Remaining time of dish-washing

Used to acquire remaining dish-washing time as a total of remaining time of prewashing (EPC = 0xE8), remaining time of washing (EPC = 0xE9), and remaining time for rinsing (EPC=0xEA). The remaining time shall be indicated as hours 0—254 (0x00—0xFE) and minutes 0—59 (0x00—0x3B). The higher- and lower-order bytes shall be used for the “hour” and “minute” values, respectively. In case the remaining time cannot be provided, it shall be indicated as 0xFFFF.

(36) Remaining drying time

Used to acquire the remaining drying time. The remaining time shall be indicated as hours 0—254 (0x00—0xFE) and minutes 0—59 (0x00—0x3B). The higher- and lower-order bytes shall be used for the “hour” and “minute” values, respectively. In case the remaining time cannot be provided, it shall be indicated as 0xFFFF.

(37) Remaining time of dish-washing and drying

Used to acquire remaining dish-washing and drying time as a total of remaining dish-washing time (EPC = 0xEB) and remaining drying time (EPC=0xEC). The remaining time shall be indicated as hours 0—254 (0x00—0xFE) and minutes 0—59 (0x00—0x3B). The higher- and lower-order bytes shall be used for the “hour” and “minute” values, respectively. In case the remaining time cannot be provided, it shall be indicated as 0xFFFF.

(38) Storing elapsed time

Since storing operation starts after completing dish-washing and drying which are the main operation of this device, the property shall acquire elapsed time instead of remaining time. The elapsed time shall be indicated as days 0—254 (0x00—0xFE), hours 0—23 (0x00—0x17), and minutes 0—59 (0x00—0x3B). The higher- and lower-order bytes shall be used for the “day”, “hour” and “minute” values, respectively. “0xFFFFFF” shall be used if elapsed time is unknown.

(39) Used water volume

Indicates water volume measured from the start of the operation. Used water volume shall be



© 2000 - 2023 ECHONET Consortium

indicated from 0.00 to 655.34 (0x0000—0xFFFE). This property value shall not be updated from completion to start of operation. Implementation during operation shall depend on individual devices, and it is not stipulated by this property. “0xFFFF” shall be used if water volume used is unknown.



© 2000 - 2023 ECHONET Consortium

# 3．5 Health-related Device Class Group

This section specifies detailed codes and properties for each ECHONET object belonging to the health-related device class group (class group specification code X1 = 0x04). Table 3-6 shows a list of classes specified in detail in this section. In the requirements of classes, “Mandatory” means that the device mounting each class must mount a combination of its property and service.

**Table 3-6　List of Objects of Health-related Device Class Group**

| Group code | Class code | Class name | Detailed requirements | Remark |
|---|---|---|---|---|
| 0x04 | 0x00 | Reserved for future use | | |
| | 0x01 | Weighing machine | ○ | |
| | 0x02 | Clinical thermometer | | |
| | 0x03 | Blood pressure meter | | |
| | 0x04 | Blood sugar meter | | |
| | 0x05 | Body fat meter | | |
| | 0x06–0xFF | Reserved for future use. | | |

Note: ○ indicates a detail is explained including a property structure in APPENDIX.



© 2000 - 2023 ECHONET Consortium

## 3．5．1 Requirements for weighing machine class

Class group code : 0x04

Class code : 0x01

Instance code : 0x01–0x7F (0x00: All-instance specification code)

| Property name | EPC | Contents of property | Data type | Data size | Unit | Access rule | Man-datory | Announce-ment at status change | Remark |
|---|---|---|---|---|---|---|---|---|---|
| | | Value range (decimal notation) | | | | | | | |
| Operation status | 0x80 | This property indicates the ON/OFF status of the weighing machine operation | unsigned short | 1 byte | — | Set | | ○ | |
| | | ON=0x30, OFF=0x31 | | | | Get | ○ | | |
| Measured value of body weight | 0xE0 | This property indicates measured value of body weight in units of 0.1 kg. | unsigned short | 2 bytes | 0.1 kg | Get | ○ | | |
| | | 0x0000–0xFFFD (0–6553.3kg) | | | | | | | |
| Measured value of body fat | 0xE1 | This property indicates measured value of body fat in units of 0.1%. | unsigned short | 2 bytes | 0.1% | Get | | | |
| | | 0x0000–0x03E8 (0–100.0%) | | | | | | | |

Note: In the “Announcement at status change” column, ○ denotes mandatory processing when the property is implemented.

(1) Operation status (inherited from the device object super class property)

This property indicates the ON/OFF status of the weighing machine operation.

(2) Measured value of body weight

This property indicates the measured body weight in units of 0.1 kg.

(3) Measured value of body fat

This property indicates the measured value of body fat in units of 0.1%.



© 2000 - 2023 ECHONET Consortium

# 3．6 Management/Operation-related Device Class Group

This section specifies detailed codes and properties for each ECHONET object belonging to the management/operation-related device class group (class group specification code X1 = 0x05). Table 3-7 shows a list of classes specified in detail in this section. In the requirements of classes, “Mandatory” means that the device mounting each class must mount a combination of its property and service.

**Table 3-7 List of Objects of Management/Operation-related Device Class Group**

| Class group code | Class code | Class name | Announcement at status change | Remark |
|---|---|---|---|---|
| 0x05 | 0x00 to 0xF9 | Reserved for future use | | |
| | 0xFA | Parallel processing combination-type power control | ○ | |
| | 0xFB | DR event controller | ○ | |
| | 0xFC | Secure communication shared key setup node | ● | |
| | 0xFD | Switch (supporting JEM-A/HA terminals) | ○ | |
| | 0xFE | Portable (mobile) terminal. | | |
| | 0xFF | Controller | ○ | |

Note: “●” indicates a detail is explained including a property structure in Part 2 of the ECHONET Specification.



© 2000 - 2023 ECHONET Consortium

## 3．6．1 Requirements for switch class (supporting JEM-A/HA terminals)

Class group code : 0x05
Class code : 0xFD
Instance code : 0x01- 0x7F (0x00: All-instance specification code)

| Property name | EPC | Contents of property | Data type | Data size | Unit | Access rule | Man-datory | Announce-ment at status change | Remark |
|---|---|---|---|---|---|---|---|---|---|
| | | Value range (decimal notation) | | | | | | | |
| Operation status | 0x80 | This property indicates the ON/OFF status. | unsigned char | 1 byte | － | Set | ○ | ○ | |
| | | ON=0x30, OFF=0x31 | | | | Get | ○ | | |
| Connected device | 0xE0 | Name of the device to connect to | unsigned char | 12 bytes | － | Set | | | |
| | | Stores the name of the type of the device. | | | | Get | | | |

Note: In the “Announcement at status change” column, ○ denotes mandatory processing when the property is implemented.

(1) Operation status (a property inherited from the device object super class)

This property indicates whether the functions specific to this class are operating (ON) or not (OFF). In the case of Get, the status of the M signal of the HA terminal shall be reflected. In the case of Set, the set value shall be compared with the value of the M signal of the HA terminal, and if they are different, the prescribed pulse shall be output (C signal of the HA terminal).

(2) Connected device

Stores the name of the type of the device to connect to in the form of an ASCII code. This value shall be stored in a non-volatile memory.

(Refer to the explanation about the “Product code” property.)



© 2000 - 2023 ECHONET Consortium

## 3．6．2 Requirements for controller class

Class group code : 0x05

Class code : 0xFF

Instance code : 0x01- 0x7F (0x00: All-instance specification code)

| Property name | EPC | Contents of property<br>Value range (decimal notation) | Data type | Data size | Unit | Access rule | Mandatory | Announcement at status change | Remark |
|---|---|---|---|---|---|---|---|---|---|
| Operation status | 0x80 | This property indicates the ON/OFF status.<br>ON=0x30, OFF=0x31 | unsigned char | 1 byte | — | Set<br>Get | <br>○ | ○ | |
| Controller ID | 0xC0 | This property indicates the ID of a controller<br>Max. 40-byte binary value | unsigned char × 40 | Max. 40 bytes | — | Get | | | Note 1 |
| Number of devices controlled | 0xC1 | The number of devices controlled by a controller with a given controller ID<br>0x0000-0xFFFD (0-65533) | unsigned short | 2 bytes | — | Get | | | Note 1 |
| Index | 0xC2 | This property indicates the index of the device list<br>0x0001-0xFFFD (1-65533) | unsigned short | 2 bytes | — | Set / Get | | | |
| Device ID | 0xC3 | This property indicates the ID of a device<br>Max. 40 byte binary value | unsigned char × 40 | Max. 40 bytes | — | Get | | | Note 1 |
| Device type | 0xC4 | This property indicates the type of a device showing a device ID<br>Class group code + class code | unsigned char × 2 | 2 bytes | — | Get | | | Note 1 |
| Name | 0xC5 | This property indicates the name of a device showing a device ID<br>Specified using UTF-8 (no BOM) | unsigned char × 64 | Max. 64 bytes | — | Get | | | |
| Connection status | 0xC6 | This property indicates the status of a device showing a device ID<br>Connected = 0x41, Disconnected = 0x42, Not registered = 0x43, Deleted = 0x44 | unsigned char | 1 byte | — | Get | | | Note 1 |
| Business code of the device to be controlled | 0xC7 | Specified in 3 bytes<br>(Assigned by the ECHONET Consortium) | unsigned char × 3 | 3 bytes | — | Get | | | Note 1 |
| Product code of the device to be controlled | 0xC8 | Specified in ASCII code<br>(Assigned by each manufacturer) | unsigned char × 12 | Max. 12 bytes | — | Get | | | |
| Manufacture date of the device to be controlled | 0xC9 | Specified in 4 bytes<br>This property indicates the date as YYMD (1 character = 1 byte)<br>YY: Western calendar year (e.g. 1999 = 0x07CF)<br>M: month (e.g. December = 0x0C)<br>D: day (e.g. 20th = 0x14) | unsigned char × 4 | 4 bytes | — | Get | | | |
| Registered | 0xCA | Specified in 4 bytes | unsigned | 4 bytes | — | Get | | | |



© 2000 - 2023 ECHONET Consortium

| | | | | | | | | | |
|---|---|---|---|---|---|---|---|---|---|
| information renewal date of the device to be controlled | | his property indicates the date as YYMD (1 character = 1 byte)<br>YY: Western calendar year (e.g. 1999 = 0x07CF)<br>M: month (e.g. December = 0x0C)<br>D: day (e.g. 20th = 0x14) | char × 4 | | | | | | |
| Registered information renewal version information of the device to be controlled | 0xCB | Version information renewed each time a controlled device is added or deleted<br>0x0000-0xFFFD (0-65533) | unsigned short | 2 bytes | — | Get | | | |
| Place to install device to be controlled | 0xCC | This property indicates the place where a device showing a device ID is installed.<br>See “2.2 Installation location property” | unsigned char | 1 byte | | Get | | | |
| Fault status of device to be controlled | 0xCD | This property indicates the fault occurred status of a device showing a device ID.<br>Fault occurred=0x41, No fault has occurred=0x42 | unsigned char | 1 byte | | Get | | | |
| Address of installation location | 0xE0 | This property indicates the address where the controller is installed.<br>Specified using UTF-8 (no BOM) | unsigned char | Max. 255 byte | - | Get | | | |
| Set property map for device to be controlled | 0xCE | This property indicates Set property map of device indicated by device ID.<br>Refer to Appendix 1 | unsigned char x (Max. 17) | Max. 17 byte | | Get | | | |
| Get property map for device to be controlled | 0xCF | This property indicates “get property map” of the device indicated by the device ID.<br>Refer to Appendix 1 | unsigned char x (Max. 17) | Max. 17 byte | | Get | | | |

Note: In the “Announcement at status change” column, ○ denotes mandatory processing when the property is implemented.

Note 1:When linking with other systems, data corresponding to this property must be retained without fail. However, controllers not sharing these data inside the ECHONET Lite domain do not need to have the relevant properties installed in the controller class.

(1) Operation status (property inherited from the device object super class)

This property indicates whether the function intrinsic to this class is operating or not (ON/OFF). In the node incorporating this class, if the function of this class is started concurrently with the start of node operation, this property may be implemented at a fixed value of 0x30 (Operation status ON).

(2) Controller ID

This is a unique ID that allows each controller to be uniquely identified. Even when installing instance classes of more than one controller class inside the same node, each controller ID shall be unique. Unique IDs may be generated by basing them on the manufacturer’s own “identification



© 2000 - 2023 ECHONET Consortium

number properties" or similar. Controllers incorporating the controller class and linked to other systems outside the ECHONET Lite domain must retain data corresponding to this property.

(3) Number of devices controlled

This property detects devices connected to a network by a controller class indicated by the controller ID property, and indicates the number of devices given device IDs. Controllers incorporating the controller class and linked to other systems outside the ECHONET Lite domain must retain data corresponding to this property.

(4) Index

When a controller gives a device ID to a device (instance), it creates and controls an index for each device ID. The index starts from 0x0001 and lists information on devices, without any missing numbers. When the value of this property changes, the object of designation shifts to another device, in which case the values of properties such as device ID, device type and name are also likely to change.

| Index | Device ID | Device type | Name | Connection status | Business code of the device to be controlled | |
|---|---|---|---|---|---|---|
| 0x0001 | | | | | | |
| 0x0002 | | | | | | |
| 0x0003 | | | | | | |
| 0x0004 | | | | | | |

Note that, as stated in the explanation of each property, controllers incorporating the controller class and linked to other systems outside the ECHONET Lite domain must retain data corresponding to the number of the device to be controlled, device ID, device type, connection status, and the business code of the device to be controlled.

Also, when specified in the SetGet ESV, properties specified by Get shall have property values related to the relevant device in the index property Set in this property. Write requests to the "index" property (Set) and read requests to other related properties (Get) may be sent as separate messages, but it is recommended that SetGet (ESV = 0x6E) be used as the service code so that Set requests to the "index" property and Get requests to other related properties can be sent in a single message. This is due to the possibility that a time lag could arise and write requests to the "index" property from another device could be received in the meantime.

(5) Device ID



© 2000 - 2023 ECHONET Consortium

This property indicates the ID for identifying devices shown in the index property. When controlling more than one device, each device ID shall be unique. The device ID of the relevant device must not be changed while controlling. Unique device IDs shall be assigned by generating them based on the "Identification number" property acquired from the device. Controllers incorporating the controller class and linked to other systems outside the ECHONET Lite domain must retain data corresponding to this property.
When not controlling a device corresponding to the value specified in the index property, the value of this property shall be 0xFF.

(6) Device type
This property indicates the type of a device shown in the index property, consisting of the class group code and class code in 2 bytes. Controllers incorporating the controller class and linked to other systems outside the ECHONET Lite domain must retain data corresponding to this property.
When not controlling a device corresponding to the value specified in the index property, the value of this property shall be 0xFFFF.

(7) Name
This property indicates the name of a device shown in the index property. The name established in applications or other features of the relevant controller shall be indicated. It is recommended that controllers incorporating the controller class and linked to other systems outside the ECHONET Lite domain retain data corresponding to this property.

(8) Connection status
This property indicates the connection status of a device shown in the index property. In this Version, it defines the status as "Connected", "Disconnected", "Not registered" or "Deleted".
The "Connected" status indicates that a device with a registered controller is connected to a network.
The "Disconnected" status indicates that a device with a registered controller cannot be seen on the network by the controller.
The "Not registered" status indicates that a network connection can be confirmed but the controller is not registered.
The "Deleted" status indicates that a device with a previously registered controller has been removed from the objects of control. If a device controlled under the "Deleted" status is detected as having been reconnected to the network, it is controlled after changing the connection status without having a new index added. However, information on the device in question may itself be deleted without using the "Deleted" status.
Controllers incorporating the controller class and linked to other systems outside the ECHONET Lite



© 2000 - 2023 ECHONET Consortium

domain must retain data corresponding to this property.
Each connection status shall correspond to the property values 0x41 / 0x42 / 0x43 / 0x44 respectively, in that order. When not controlling a device corresponding to the value specified in the index property, the value of this property shall be 0xFF.

(9) Business code of the device to be controlled
This property indicates the business code (manufacturer code) of a device shown in the index property. The property value of the business code (manufacturer code) shall be allocated by the ECHONET Consortium to each ECHONET Consortium member. Controllers incorporating the controller class and linked to other systems outside the ECHONET Lite domain must retain data corresponding to this property.
When not controlling a device corresponding to the value specified in the index property, the value of this property shall be 0xFFFFFF.

(10) Product code of the device to be controlled
This property indicates the product code of a device shown in the index property. Because the product code property in the device object super class is optional, it may not be possible to acquire it from the device via the network. In that case, it may be registered and controlled via the controller UI or similar. It is recommended that controllers incorporating the controller class and linked to other systems outside the ECHONET Lite domain retain data corresponding to this property.

(11) Manufacture date of the device to be controlled
This property indicates the date of manufacture of a device shown in the index property. Note that, depending on the device, it may be difficult to register all dates, and control is therefore based on the year only, or the year and the month only. In such cases, unretained data shall be reserved with 0x00. It is recommended that controllers incorporating the controller class and linked to other systems outside the ECHONET Lite domain retain data corresponding to this property.
When not controlling a device corresponding to the value specified in the index property, the value of this property shall be 0xFFFFFFFF.

(12) Registered information renewal date of the device to be controlled
This property indicates the date on which a controlled device is “added” or “deleted”. The value of this property shall not change when there is a change in property values related to information on each device subject to control (such as the name or connection status of the controlled device).

(13) Registered information renewal version information of the device to be controlled



© 2000 - 2023 ECHONET Consortium

Finally, when a controlled device has been "added" or "deleted", the version information shall be renewed. Upon renewal, the value of this property shall be increased by 1. When a device list is renewed in cases of 0xFFFD, it shall change to 0x0000. The value of this property shall not change when there is a change in property values related to information on each device subject to control (such as the name or connection status of the controlled device).

(14) Place to install device to be controlled

This property indicates the place of the device installed shown in the index property. The value of installation location " 2. 2~~2. 2~~"Installation location" property" shall be referenced. It is recommended that controllers incorporating the controller class and linked to other systems outside the ECHONET Lite domain retain data corresponding to this property.

When not controlling a device corresponding to the value specified in the index property, the value of this property shall be 0xFF.

(15) Fault status of device to be controlled

This property indicates the fault status of a device shown in the index property. The value of fault occurred status "2. 4~~2. 4~~ "Fault status" property" shall be referenced. It is recommended that controllers incorporating the controller class and linked to other systems outside the ECHONET Lite domain retain data corresponding to this property.

When not controlling a device corresponding to the value specified in the index property, the value of this property shall be 0xFF.

(16) Address of installation location

This property indicates the address where the controller is located.

(17) Set property map for device to be controlled

This property indicates the Set property map of the device shown in the index property. The value of Set property map "2. 11~~2. 11~~ "Property map" property" shall be referenced. It is recommended that controllers incorporating the controller class and linked to other systems outside the ECHONET Lite domain retain data corresponding to this property.。

When not controlling a device corresponding to the value specified in the index property, the value of this property shall be 0xFF.

(18) Get property map for device to be controlled

This property indicates the Get property map of a device shown in the index property. The value of Get property map "2. 11~~2. 11~~ "Property map" property" shall be referenced. It is recommended that



© 2000 - 2023 ECHONET Consortium

controllers incorporating the controller class and linked to other systems outside the ECHONET Lite domain retain data corresponding to this property.

When not controlling a device corresponding to the value specified in the index property, the value of this property shall be 0xFF.



© 2000 - 2023 ECHONET Consortium

## 3．6．3 Requirements for the DR event controller class

Class group code : 0x05

Class code : 0xFB

Instance code : 0x01-0x7F (0x00: All-instance specification code)

| Property name | EPC | Contents of property<br>Value range (decimal notation) | Data type | Data size | Unit | Access rule | Man-datory | Announcement at status change | Remark |
|---|---|---|---|---|---|---|---|---|---|
| Operation status | 0x80 | This property indicates the ON/OFF status<br>0x30: ON, 0x31: OFF | unsigned char | 1 byte | — | Set<br>Get | <br>○ | ○ | (1) |
| Business ID | 0xD0 | This property indicates the identifier (ID) of a power company, aggregator or other demand response (DR) activating business<br>0x0001-0xFFFD (1-65533) | unsigned short | 2 bytes | — | Get | ○ | | (2) |
| DR program type | 0xD1 | This property indicates the type of DR program<br>0x30: CPP<br>0x31: PTR<br>0x32: Power use limit<br>0x33: Power generation limit<br>0x34: Electricity forecast<br>0x35: DLC<br>0x36: Level designation<br>0x00-0x2F: Future reserved<br>0x37-0x7F: Future reserved<br>0x80-0xFD: User defined domain (used by DR activating business) | unsigned char | 1 byte | — | Get | ○ | | (3) |
| Program ID | 0xD2 | This property indicates the ID of a DR program<br>0x01-0xFD (1-253)<br>If not assigned: 0xFE | unsigned char | 1 byte | — | Get | ○ | | (4) |
| Current valid event information | 0xD3 | This property indicates event information valid at the current time<br>“Event information” or 0x00:<br>“Event information” indicates the format and value range defined by the “Event information” property (0xE0)<br>0x00 indicates no event information valid at the current time | Similar to "Event information" property, but in case of no current valid event information, set unsigned char | MAX 165bytes, similar to "Event information" property but 1 byte, in case of no current valid event information | — | Get | ○ | | (5) |
| Next valid event information | 0xD4 | This property indicates the next valid event information after the current time | Similar to "Event information | MAX 165bytes, | — | Get | ○ | | (6) |



© 2000 - 2023 ECHONET Consortium

| | | | | | | | | | |
|---|---|---|---|---|---|---|---|---|---|
| | | “Event information” or 0x00:<br>“Event information” indicates the format and value range defined by the “Event information” property (0xE0)<br>0x00 indicates no next valid event information after the current time | " property, but in case of no current valid event information, set unsigned char | similar to "Event information" property but 1 byte in case of no current valid event information | | | | | |
| Future event information notification ID list | 0xD5 | This property indicates a list of notification IDs for event information at current and future times of day<br>Byte 1 (list count): 0x01-0x64 (1-100)<br>If a list has no notification ID, 0x00<br>Byte 2 onwards (notification ID list): Notification IDs listed 1 byte at a time, up to a maximum of 100 (value range of each notification ID 0x00-0x63 (0-99))<br>If a list has no notification ID, there is no Byte 2 onwards | unsigned char＋unsigned char ×(MAX 100) | MAX 101 bytes | — | Get | ○ | | (7) |
| Past event information notification ID list | 0xD6 | This property indicates a list of notification IDs for event information at past times of day<br>Byte 1 (list count): 0x01-0x64 (1-100),<br>If a list has no notification ID, 0x00<br>Byte 2 onwards (notification ID list): Notification IDs listed 1 byte at a time, up to a maximum of 100 (value range of each notification ID 0x00-0x63 (0-99))<br>If a list has no notification ID, there is no Byte 2 onwards | unsigned char＋unsigned char ×(MAX 100) | MAX 101 bytes | — | Get | ○ | | (8) |
| Newest received event notification ID | 0xD7 | This property indicates the notification ID for event information received at the most recent date and time<br>0x00-0x63 (0-99)<br>If there is no notification ID: 0xFE | unsigned char | 1 byte | — | Get | ○ | ○ | (9) |
| Oldest received event notification ID | 0xD8 | This property indicates the notification ID for event information received at the most distant date and time<br>0x00-0x63 (0-99)<br>If there is no notification ID: 0xFE | unsigned char | 1 byte | — | Get | ○ | | (10) |
| Notification ID designation | 0xD9 | This property designates the notification ID of event information needed to acquire<br>0x00-0x63 (0-99) | unsigned char | 1 byte | — | Set/Get | ○ | | (11) |
| Event information ID designation | 0xDA | This property designates the event information ID of “Confirm/opt information” or the status of “Confirm/opt information” needed to acquire | unsigned char ×10 | 10 bytes | — | Set/Get | | | (12) |



© 2000 - 2023 ECHONET Consortium

| | | | | | | | | | |
|---|---|---|---|---|---|---|---|---|---|
| | | Bytes 1-2: Business ID<br>Byte 3: DR program type<br>Byte 4: Program ID<br>Bytes 5-8: Implementation date<br>Year: 0x0001-0x270F (1-9999)<br>Month: 0x01-0x0C (1-12)<br>Day: 0x01-0x1F (1-31)<br>Bytes 9-10: If there is no confirm/opt information or confirm/opt information status corresponding to the event information ID with designated event ID, the value of this property shall be 0xFFFFFFFFFFFFFFFFFFFE | | | | | | | |
| Target device information list | 0xDB | This property indicates the list count and the lists of DR target device information<br>Byte 1 (list count): 0x01-0x0A (1-10)<br>When there is no list, 0x00 is indicated<br>Bytes 2-24: Target device information<br>Bytes 2-4: EOJ<br>Byte 5: Installation location<br>Bytes 6-7: Individual identification information<br>Bytes 8-24: Identification number<br>Byte 25 onwards: Repeat information in Bytes 2-24 | unsigned char＋(unsigned char×23)×(MAX 10) | MAX 231 bytes | — | Get | | | (13) |
| Event information | 0xE0 | This property indicates DR event information<br>Values defined in each data item of event information are assigned collectively | unsigned char×15＋unsigned short×3＋unsigned short×3×MAX24 | MAX 165 bytes | — | Get | ○ | | (14) |
| Notification ID | | This property indicates serial number allocated by this class to make the event information uniquely identifiable<br>0x00-0x63 (0-99)<br>If there is no notification ID: 0x64 | unsigned char | 1 byte | — | | | | |
| Event information data type | | This property indicates the event information data type<br>Byte 1 (major version): 0x01-0xFD (1-253)<br>If not assigned: 0xFE<br>Byte 2 (minor version): 0x00-0xFD (0-253)<br>If not assigned: 0xFE | unsigned char ×2 | 2 bytes | — | | | | |
| Business ID | | This property indicates the identifier (ID) of a power company, aggregator or other DR activating business (same value as the “Business ID” property (0xD0))<br>0x0001-0xFFFD (1-65533)<br>If not assigned: 0xFFFE | unsigned short | 2 bytes | — | | | | |
| DR program | | This property indicates the type of DR program | unsigned char | 1 byte | — | | | | |



© 2000 - 2023 ECHONET Consortium

| | | | | | | | | | |
|---|---|---|---|---|---|---|---|---|---|
| type | | 0x30: CPP<br>0x31: PTR<br>0x32: Power use limit<br>0x33: Power generation limit<br>0x34: Electricity forecast<br>0x35: DLC<br>0x36: Level designation<br>0x00-0x2F: Future reserved<br>0x37-0x7F: Future reserved<br>0x80-0xFD: User defined domain (used by DR activating business)<br>If not assigned: 0xFE | | | | | | | |
| Program ID | | This property indicates the program ID<br>0x01-0xFD (1-253)<br>If not assigned: 0xFE | unsigned char | 1 byte | — | | | | |
| Implementation date | | This property indicates the date of implementation of an event in terms of the year (YYYY), month (MM) and day (DD)<br>Year: 0x0001-0x270F (1-9999)<br>Month: 0x01-0x0C (1-12)<br>Day: 0x01-0x1F (1-31)<br>If not assigned: 0xFFFFFFFE | unsigned short + unsigned char×2 | 4 bytes | — | | | | |
| Event ID | | This property indicates the event ID allocated uniquely for each implementation date<br>Byte 1 (event number): 0x01-0x09 (1-9)<br>Byte 2 (version count): 0x01-0xFD (1-253)<br>If not assigned: 0xFE | unsigned char ×2 | 2 bytes | — | | | | |
| Status | | This property indicates the status of an event<br>In cases of CPP, PTR, and Level designation:<br>0x30: Advance notification<br>0x31: Decision notification<br>0x32: Cancellation notification<br>0x40: Advance notification (test)<br>0x41: Decision notification (test)<br>0x42: Cancellation notification (test)<br>In cases of Power use limit, Power generation limit, and DLC:<br>0x30: Advance notification<br>0x31: Decision notification<br>0x32: Cancellation notification<br>0x40: Advance notification (test)<br>0x41: Decision notification (test)<br>0x42: Cancellation notification (test)<br>0x50: Activation notification<br>0x51: End notification<br>0x60: Activation notification (test)<br>0x61: End notification (test)<br>In cases of Electricity forecast:<br>0x31: Decision notification<br>0x32: Cancellation notification<br>0x41: Decision notification (test)<br>0x42: Cancellation notification (test)<br>If not assigned: 0xFE | unsigned char | 1 byte | — | | | | |
| Start time | | This property indicates the start time of an event in hours (hh) and minutes (mm)<br>Byte 1 (hours): 0x00-0x17 (0-23)<br>Byte 2 (minutes): 0x00-0x3B (0-59)<br>If not assigned: 0xFE | unsigned char ×2 | 2 bytes | — | | | | |



© 2000 - 2023 ECHONET Consortium

| | | | | | | | | | |
|---|---|---|---|---|---|---|---|---|---|
| Continuous time | | This property indicates the continuous time of an event in units of minutes<br>0x0001-0xFFFD (1-65533)<br>If not assigned: 0xFFFE | unsigned short | 2 bytes | — | | | | |
| Units of value 1 | | This property indicates units and scales of value 1 | unsigned char | 1 byte | Written in the contents of property | | | | |
| | | When indicating price information units in CPP<br>0x30: Defined by each business output during a power outagely<br>0x31: 0.01 yen / kWh<br>0x32 : 0.01 yen /kW<br>0x33 : 0.0001 yen /kWh<br>0x34 : 0.0001 yen /kW<br>0xFE: No unit assigned<br>When indicating price information units in PTR<br>0x30: Defined by each business output during a power outagely<br>0x31: 0.01 yen / kWh<br>0x32: 0.01 yen /kW<br>0x33: 0.0001 yen /kWh<br>0x34:0.0001 yen /kW<br>0xFE: No unit assigned<br>When indicating power use limit contractual capacity in Power use limit<br>0x40: A<br>0x41: kWh 0x42: kW<br>0x43: Wh<br>0x44: W<br>When indicating load control in DLC<br>0x40: A<br>0x41: kW h<br>0x42 : kW<br>0x43 : Wh<br>0x44 : W<br>0x50 : -A<br>0x51 : -kW h<br>0x52 : -kW<br>0x53 : -Wh<br>0x54 : -W<br>Power generation limit unit in Power generation limit<br>0x50: %<br>When indicating power supply-demand tightness in Electricity forecast<br>0xFE: No unit assigned<br>When indicating degree of power reduction request in Level designation<br>0xFE: No unit assigned | | | | | | | |
| Units of value 2 | | This property indicates units and scales of value 2 | unsigned char | 1 byte | Writte | | | | |



© 2000 - 2023 ECHONET Consortium

| | | | | | | | | | |
|---|---|---|---|---|---|---|---|---|---|
| | | In cases of CPP (no value for value 2)<br>0xFE: No unit assigned<br>When indicating baseline units in PTR<br>0x30: Defined by each business output during a power outagely<br>0x31: kWh<br>0x32 : kW<br>0x33 : Wh<br>0x34 : W<br>0xFE: No baseline unit assigned<br>Power use limit unit in Power use limit<br>0x40: A<br>0x41: kWh<br>0x42: kW<br>0x43: Wh<br>0x44: W<br>In cases of DLC (no value for value 2)<br>0xFE: No unit assigned<br>In cases of Power generation limit (no value for value 2)<br>0xFE: No unit assigned<br>When indicating expected maximum power usage in Electricity forecast<br>0x50: %<br>In cases of Level designation (no value for value 2)<br>0xFE: No unit assigned | | | n in the contents of property | | | | |
| Number of categories | | This property indicates the number of time categories in an event<br>0x01-0x18 (1-24)<br>If not assigned: 0xFE | unsigned char | 1 byte | — | | | | |
| Category 1 continuous time | | This property indicates category 1 continuous time in units of minutes<br>0x0001-0xFFFD (1-65533)<br>If not assigned: 0xFFFE | unsigned short | 2 bytes | — | | | | |
| Category 1 value 1 | | This property indicates value 1 of category 1<br>In cases of price information in CPP<br>0x0000-0xFFFD (0-65533)<br>In cases of price information in PTR<br>0x0000-0xFFFD (0-65533)<br>In cases of contractual capacity in Power use limit<br>0x0000-0xFFFD (0-65533)<br>In cases of load adjustment amount in DLC<br>0x0000-0xFFFD (0-65533)<br>In cases of Power generation limit value in Power generation limit<br>0x0000-0x0064 (0-100)<br>In cases of power supply-demand tightness in Electricity forecast<br>0x0060: Stable<br>0x0061: Somewhat tight<br>0x0062: Tight<br>0x0063: Very tight<br>0xFFFE: No value assigned<br>In cases of degree of power reduction request in Level designation<br>0x0070: 0<br>0x0071: 1<br>0x0072: 2<br>0x0073: 3 | unsigned short | 2 bytes | — | | | | |



© 2000 - 2023 ECHONET Consortium

| | | | | | | | | | |
|---|---|---|---|---|---|---|---|---|---|
| Category 1 value 2 | | This property indicates value 2 of category 1<br>In cases of CPP (no value for value 2)<br>Assign 0xFFFE<br>In cases of baseline in PTR<br>0x0001-0x270F (1-9999)<br>In cases of Power use limit capacity in Power use limit<br>0x0000-0xFFFD (0-65533)<br>In cases of DLC (no value for value 2)<br>Assign 0xFFFE<br>In cases of Power generation limit (no value for value 2)<br>Assign 0xFFFE<br>In cases of expected maximum power usage in Electricity forecast<br>Assign 0x0000-0x006E (0-110)<br>In cases of Level designation (no value for value 2)<br>Assign 0xFFFE | unsigned short | 2 bytes | — | | | | |
| Category N continuous time | | This property indicates category N continuous time in units of minutes Below, up to a maximum of N = 24 increments may be assigned<br>0x0001-0xFFFD (1-65533)<br>If not assigned: 0xFFFE | unsigned short | 2 bytes | — | | | | |
| Category N value 1 | | This property indicates value 1 of category N<br>If not assigned: 0xFFFE<br>In cases of price information in CPP<br>0x0000-0xFFFD (0-65533)<br>In cases of price information in PTR<br>0x0000-0xFFFD (0-65533)<br>In cases of contractual capacity in Power use limit<br>0x0000-0xFFFD (0-65533)<br>In cases of load adjustment amount in DLC<br>0x0000-0xFFFD (0-65533)<br>In cases of Power generation limit value in Power generation limit<br>0x0000-0x006E (0-110)<br>In cases of power supply-demand tightness in Electricity forecast<br>0x0060: Stable<br>0x0061: Somewhat tight<br>0x0062: Tight<br>0x0063: Very tight<br>0xFFFE: No value assigned<br>In cases of degree of power reduction request in Level designation<br>0x0070: 0 | unsigned short | 2 bytes | — | | | | |
| Category N value 2 | | This property indicates value 2 of category N | unsigned short | 2 bytes | — | | | | |



© 2000 - 2023 ECHONET Consortium

| | | | | | | | | | | |
|---|---|---|---|---|---|---|---|---|---|---|
| | | | CPP (no value for value 2)<br>Assign 0xFFFE<br>In cases of baseline in PTR<br>0x0001-0x270F (1-9999)<br>In cases of Power use limit capacity in Power use limit<br>0x0000-0xFFFD (0-65533)<br>In cases of DLC (no value for value 2)<br>Assign 0xFFFE<br>In cases of Power generation limit (no value for value 2)<br>Assign 0xFFFE<br>In cases of expected maximum power usage in Electricity forecast<br>Assign 0x0000-0x006E (0-110)<br>In cases of Level designation (no value for value 2)<br>Assign 0xFFFE | | | | | | | |
| Confirm/opt information | | 0xE1 | This property indicates the confirm/opt information of a DR event<br>Values defined in each data item of event confirm/opt information are assigned collectively | unsigned char×10＋unsigned short×2 | 14 bytes | — | Set/Get | | | (15) |
| | Notification ID | | This property indicates serial number allocated by this class to make the event information uniquely identifiable<br>0x00-0x63 (0-99) | unsigned char | 1 byte | — | | | | |
| | Confirm/opt information data type | | This property indicates the data type of confirm/opt information<br>Byte 1 (major version): 0x01-0xFD (1-253)<br>If not assigned: 0xFE<br>Byte 2 (minor version): 0x00-0xFD (0-253)<br>If not assigned: 0xFE | unsigned char ×2 | 2 bytes | — | | | | |
| | Business ID | | This property indicates the identifier (ID) of a power company, aggregator or other DR activating business (same value as the “Business ID” property (0xD0))<br>0x0001-0xFFFD (1-65533) | unsigned short | 2 bytes | — | | | | |
| | DR program type | | This property indicates the type of DR program<br>0x30: CPP<br>0x31: PTR<br>0x32: Power use limit<br>0x33: Power generation limit<br>0x34: Electricity forecast<br>0x35: DLC<br>0x36: Level designation<br>0x00-0x2F: Future reserved<br>0x37-0x7F: Future reserved<br>0x80-0xFD: User defined domain (used by DR activating business) | unsigned char | 1 byte | — | | | | |
| | Program ID | | This property indicates the program ID<br>0x01-0xFD<br>If not assigned: 0xFE | unsigned char | 1 byte | — | | | | |
| | Implementation date | | This property indicates the date of implementation of an event in terms of the year (YYYY), month (MM) and day (DD) | unsigned short + unsigned | 4 bytes | — | | | | |



© 2000 - 2023 ECHONET Consortium

| | | | | | | | | | | |
|---|---|---|---|---|---|---|---|---|---|---|
| | | | Bytes 1-2 (year): 0x0001-0x270F (1-9999)<br>Byte 3 (month): 0x01-0x0C (1-12)<br>Byte 4 (day): 0x01-0x1F (1-31) | char×2 | | | | | | |
| | Event ID | | This property indicates the event ID allocated uniquely for each implementation date | unsigned char ×2 | 2 bytes | — | | | | |
| | | | Byte 1 (event number): 0x01-0x09 (1-9)<br>Byte 2 (version count): 0x01-0xFD (1-253) | | | | | | | |
| | Participation setting | | This property designates the settings for participation or non-participation in an event | unsigned char | 1 byte | — | | | | |
| | | | 0x30: Event participation<br>0x31: Event non-participation<br>0x32: Confirmed<br>0x33: No setting (initial value) | | | | | | | |
| Confirm/opt information status | | 0xE2 | This property indicates the status of confirm/opt information of a DR event | unsigned char×2 | 2 bytes | — | Get | | | (16) |
| | | | Values defined in each data item of confirm/opt information status are assigned collectively | | | | | | | |
| | Participation setting acceptance status | | This property indicates the server response status of a DR activating business to the transmission of confirm/opt information | unsigned char | 1 byte | — | | | | |
| | | | 0x30: Not accepted<br>0x31: Accepted<br>0x41: Abnormal OPT information received (Message description error, etc.)<br>0x42: Error after acceptance deadline<br>0xFE: No setting (initial value) | | | | | | | |
| | Event participation status | | This property indicates the status of participation in an event | unsigned char | 1 byte | — | | | | |
| | | | 0x30: Event participation<br>0x31: Event non-participation<br>0xFE: No setting (initial value) | | | | | | | |

Note: In the "Announcement at status change" column, ○ denotes mandatory processing when the property is implemented.

Note 1: Time zones for the event implementation date and start time of an event shall be defined as follows.

- Correspondence between the DR activating business server and the DR event controller shall use a time based on the communication specification being used.
- Local time shall be used by the DR event controller.

The purpose of this class shall be for a demand-response signal (DR event) received from a demand-response (DR) activating business to be shared between the DR event controller and various devices within the end-user's ECHONET domain, by using the ECHONET / ECHONET Lite protocol.



© 2000 - 2023 ECHONET Consortium

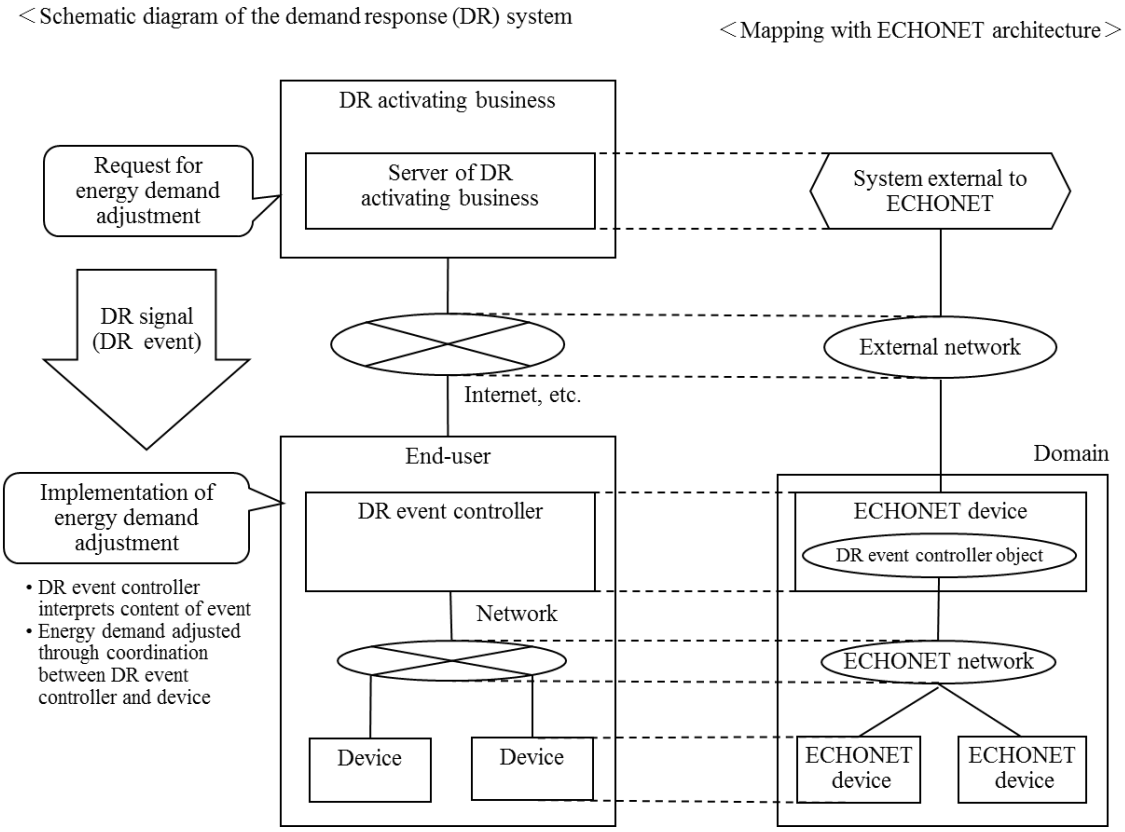


(1) Operation status (property inherited from the device object super class)

This property indicates whether or not a DR event controller is capable of sending and receiving DR events and OPT information (ON/OFF). 0x30 shall be made to correspond to ON and 0x31 to OFF.

(2) Business ID

This property indicates the identifier (ID) for uniquely identifying a DR activating business that provides a DR program and DR event. This property value is fixed for each instance. If a DR event controller controls the DR programs of more than one DR business, it shall generate separate instances for each. It must not be possible for a single instance to be shared by more than one DR business.

(3) DR program type

This property indicates the type of a DR program. A DR program is a method of implementing a demand-response agreed between a DR activating business and the end-user, and indicates the various methods of CPP (0x30), PTR (0x31), Power use limit (0x32), Power generation limit (0x33), Electricity forecast (0x34), DLC (0x35), and Level designation (0x36). Moreover, a DR activating business may define its own program. In this case, the 0x80-0xFD domain shall be used.



© 2000 - 2023 ECHONET Consortium

This property value remains fixed at the value decided when the instance was created.
If a DR event controller controls more than one DR program, it shall generate separate instances for each. It must not be possible for a single instance to be shared by more than one DR program.

(4) Program ID

This property indicates the ID for identifying a DR program. Since the DR activating business may define more than one DR program of the same DR program type, this “Program ID” property shall be used to make each DR program identifiable. Therefore, the DR activating business must assign this “Program ID” property value so that the DR program is unique by combining the “Business ID” property, the “DR program type” property and this “Program ID property”. This enables other devices and own-device applications that access this class to judge, by reading these three property values, whether or not it is this class that corresponds to a DR program requiring a response. This property value remains fixed for each instance.
If a DR event controller controls more than one DR program, it shall generate separate instances for each. It must not be possible for a single instance to be shared by more than one DR program.

(5) Current valid event information

This property stores event information valid at the current time. By reading this property value, it can be confirmed whether or not there is event information requiring demand-response action at the current time. If there is such event information, that information can be acquired.
“Current valid event (an event requiring demand-response action at the current time)” shall be defined as follows.

- An event in which the current time falls between the event start time and continuous time.
- An event with the status “Decision notification”, “Activation notification ”, “Decision notification (test)” or “Activation notification (test)”. Includes events opted out by the end-user.
- Does not include events with the status “Advance notification”, “Cancellation notification”, “Advance notification (test)”, “Cancellation notification (test)”, “End notification”, or “End notification (test)”.
- A maximum of one event information can be stored, because more than one event information could not be valid at the same time. If a case arose in which more than one event would become valid at the same time in a single DR program, it could cause a DR program design error or similar in the DR activating business. As such, the method of dealing with this shall depend on the implementation.

For details on the content of event information, see the “Event information” property (0xE0).

(6) Next valid event information



© 2000 - 2023 ECHONET Consortium

This property stores one item of event information that will be valid next when time has elapsed after the current time. By reading this property value, it can be confirmed whether or not there is due to be event information that will be valid when seen from the current time. If there will be such event information, that information can be acquired.

"Next valid event (an event requiring demand-response action next when time has elapsed after the current time)" shall be defined as follows.

- Event information in which the event start time is closest to the current time.
- An event with the status "Decision notification", "Activation notification", "Decision notification (test)" or "Activation notification (test)". Includes events opted out by the end-user.
- Does not include events with the status "Advance notification", "Cancellation notification", "Advance notification (test)", "Cancellation notification (test)", "End notification", or "End notification (test)". Also does not include current valid events in (5) above. Moreover, even if the event status is "Decision notification", "Activation notification", "Decision notification (test)" or "Activation notification (test)", events subject to "Cancellation notification" are not included.

For details on the content of event information, see the "Event information" property (0xE0).

(7) Future event information notification ID list

This property stores the list count and the notification ID list of event information targeting present and future times. Data length is variable, the size being the number of notification IDs +1 (however, if there is no relevant notification ID (0x00), the data size is 1 byte).

○ List count

This property indicates the number of event information cases targeting present and future times. In other words, it stores the number of notification IDs stored in this property's notification ID list. If there are no notification IDs in the list, 0x00 is returned. In this case, it means that no present or future events are scheduled.

○ Notification ID list

Of the retained event information, this property sets the notification ID list of event information targeting present and future times (including notification IDs of current valid event information). All present and future events are subject to listing, regardless of the event information status or the event participation / non-participation assigned for that event. The value range for the notification ID shall be 0x00-0x63 (0-99). These values are sorted and assigned in this list in sequence from the event start date and time (implementation date and start time) closest to the current time. If there is an event with the same event start date and time, the event status is different and the status values of the event information property are listed in sequence starting with the smallest.



© 2000 - 2023 ECHONET Consortium

(8) Past event information notification ID list

This property stores the list count and the notification ID list of event information targeting past times. Data length is variable, the size being the number of notification IDs +1 (however, if there is no relevant notification ID (0x00), the data size is 1 byte).

○ List count

This property indicates the number of event information cases targeting past times. In other words, it stores the number of notification IDs stored in this property's notification ID list. If there are no notification IDs in the list, 0x00 is returned. In this case, it means that no events have yet taken place, or that past event information has all been discarded/disposed by the DR event controller and has not been retained.

○ Notification ID list

Of the retained event information, this property sets the notification ID list of event information targeting past times. All past events are subject to listing, regardless of the event information status or the event participation / non-participation assigned for that event. The value range for the notification ID shall be 0x00-0x63 (0-99). These values are sorted and assigned in this list in sequence from the event start date and time (implementation date and start time) closest to the current time. If there is an event with the same event start date and time, the event status is different and the status values of the event information property are listed in sequence starting with the smallest.

(9) Newest received event notification ID

Of the event information retained by the DR event controller, the notification ID of event information with the most recent date and time of receipt from the DR activating business is assigned by this property. By acquiring this property value and comparing it with their own most recent notification ID, devices (other devices) and own-device applications that access this class can judge whether or not there is any event information not yet acquired.

When new event information is received from the DR activating business, a new notification ID is stored by this property, while the value is notified by simultaneous broadcast using INF or INFC. The value range for the notification ID shall be 0x00-0x63 (0-99). Values are assigned sequentially. After reaching 0x63, the value returns to 0x00.

(10) Oldest received event notification ID

Of the event information retained by the DR event controller, the notification ID of event information received from the DR activating business furthest in the past (event information with the oldest date and time of receipt) is assigned by this property. By acquiring this property value,



© 2000 - 2023 ECHONET Consortium

devices (other devices) and own-device applications that access this class can know the notification ID for event information that should be acquired in order to acquire past event information in chronological sequence.
If the DR event controller has deleted this event information, this property value is updated to the next oldest notification ID of event information after the deleted event, of the event information retained by this class.

(11) Notification ID designation

This property is used by devices (other devices) and own-device applications that access this class to write (Set) the notification ID of event information they need to acquire. By writing the notification ID in this property and reading the “Event information” property, event information corresponding to that notification ID can be acquired.
When making a read request, the last Set notification ID in the past is returned. When there is no last Set notification ID in the past, the initial value 0xFE is returned.
Notification IDs are assigned and controlled by the DR event controller in increments from 0, in the order that events were sent from the DR activating business. After reaching 99, the value returns to 0. of events controlled by the DR event controller, if there are any untransmitted or inactivated events in one round from 99, it shall be made possible to overwrite them and assign notification IDs. It is assumed that DR activating businesses will plan their activation so that only up to 100 (events) can be activated in a single DR program.
Notification ID write requests to the “Notification ID designation” property (Set) and read requests for event information from the “Event information” property (Get) may be sent as separate messages. However, it is recommended that SetGet (ESV = 0x6E) be used as the service code so that Set requests to the “Notification ID designation” property and Get requests to the “Event information” property can be sent in a single message, and the relevant “Event information” can be read in the resultant response message. This is due to the possibility that a time lag could arise and write requests to the “Notification ID designation” property from another device could be received in the meantime.

(12) Event information ID designation

This property is used by devices (other devices) and own-device applications that access this class to write (Set) the event information ID of confirm/opt information or confirm/opt information status they need to acquire. By writing the notification ID in this property and reading the “Confirm/opt information” property or “Confirm/opt information status” property, the confirm/opt information or confirm/opt information status corresponding to that notification ID can be acquired.
When making a read request, the last Set event information ID in the past is returned. When there is



© 2000 - 2023 ECHONET Consortium

no last Set event information ID in the past, the initial value 0xFFFFFFFFFFFFFFFFFFFE is returned.

The “Event information ID” shall be a combination of “Business ID”, “DR program type”, “Program ID”, “Implementation date” and “Event ID”.

Event information ID write requests to the “Event information ID designation” property (Set) and read requests for confirm/opt information or confirm/opt information status from the “Confirm/opt information” property or “Confirm/opt information status” property (Get) may be sent as separate messages. However, it is recommended that SetGet (ESV = 0x6E) be used as the service code, so that Set requests to the “Event information ID designation” property and Get requests to the “Confirm/opt information” or “Confirm/opt information status” property can be sent in a single message, and the relevant “Confirm/opt information” can be read in the resultant response message. This is due to the possibility that a time lag could arise and write requests to the “Notification ID designation” property from another device could be received in the meantime.

(13) Target device information list

When a DR activating business designates any device as a DR control target, the DR event controller uses this property to assign the target device information. Devices (other devices) and own-device applications that access this class can acquire information on devices designated as DR control targets by reading this property.

Target device information may also be assigned in this property when own-device applications in the DR event controller designate any device as a DR control target. The device acquires information on devices designated as DR control targets by reading this property.

Target devices shall be fixed in relation to the DR program (not changed with every DR event). In other words, target devices are designated for each combination of business ID, program type and program ID.

When more than one target is designated, target device information is assigned as a list.

Target device information shall consist of four items, namely EOJ, installation location, individual identification information, and identification number. These may be designated individually or in combination.

- In EOJ, sometimes only the device object class is assigned, and sometimes the device object instances are also included. When only the device object class is assigned, “All instances” shall be assigned in the instance code section.
- When only the device object class is assigned: Since instances are not designated, a judgment is made whether to process the event with the device objects of the designated device class themselves.
- When device object instances are also assigned: A judgment is made whether to process the



© 2000 - 2023 ECHONET Consortium

event with device objects consistent with the designated EOJ. However, since an EA (ECHONET address) is not designated, it is possible that more than one device object will be designated within the domain.

・The installation location shall be in accordance with specifications defined in the installation location property of the ECHONET device object super class. However, although this is defined as 1 byte or 17 bytes in the ECHONET device object super class, only 1 byte shall be used.

・The individual identification information shall be in accordance with specifications defined in ECHONET node profile object.

・The identification number shall be in accordance with specifications defined in the ECHONET device object super class. This is defined as 9 bytes or 17 bytes in the ECHONET device object super class, and designation may be in 9 bytes or 17 bytes. When using 9 bytes, the first ones shall be used, and the remaining 8 bytes shall all be set at "0".

When more than one target is designated, target device information is assigned as a list.

Settings for values when some information is not designated shall be as follows.

・When designating only EOJ: Installation location, Individual identification information, and Identification number shall all be set at 0x00.

・When designating only Installation location: EOJ, Individual identification information, and Identification number shall all be set at 0x00.

・When designating only Individual identification information: EOJ, Installation location, and Identification number shall all be set at 0x00.

・ When designating only Identification number: EOJ, Installation location, and Individual identification information shall all be set at 0x00.

When not designating any target device at all, Byte 1 shall be set as 0x00.

Installation location = 0x00 is defined as “Installation location not specified” in the ECHONET device object super class. Therefore, when this is designated in the target device information, devices assigned with Installation location = 0x00 are interpreted as not being control targets.

(14) Event information

Devices (other devices) and own-device applications that access this DR class use the “Notification ID” designated property to Set the notification ID of event information they need to acquire. The DR event controller then sets event information corresponding to the designated notification ID in the “Notification ID” property. The use of the SetGet service (ESV = 0x6E) is recommended, so that a single ECHONET message can be used to write to the “Notification ID” property and read from this property.

This property indicates DR event information in the order of values in notification ID, event information data type, business ID, DR program type, program ID, implementation date, event ID,



© 2000 - 2023 ECHONET Consortium

status, start time, continuous time, units, number of categories, category continuous time, and category.

If there is no event information corresponding to the designated DR event information in the notification ID designation property, the DR event controller sets the values at the time when there were no assigned values defined in all items, alongside this property.

○ Notification ID

A one-byte ID allocated uniquely to each piece of event information for control when retained by the relevant device.

○ Event information data type

The event information data type property indicates the combination of data on business ID, DR program type, program ID, implementation date, event ID, status, start time, continuous time, units, number of categories, category continuous time, and category in event information. This property indicates the event information data type in a major version and a minor version. In these specifications, the major version is fixed as “1” and the minor version as “0”. If there are compatible (*) data changes in future, such as a change in the specifications of this class, a change in the value range of the event information property, or an increase in data item options, the minor version will be incremented. If there is no compatibility, such as a repositioning due to the addition or deletion of data items, or differences in the meaning of the items themselves, the major version will be incremented.

(*) Compatible: Means that the specifications of a new version incorporate those of a previous version.

Devices acquiring events from this class are judged as follows in relation to these versions.

・When the major version is different, the data type is judged unmanageable and is no longer processed.

・ When the major version is the same but the minor version is different, the data types are judged manageable and are thus processed.

When designing event information data types featuring a change in the minor version, it should be taken into account that some devices will access this class under the previous version specifications. Thus, data shall be defined so that this kind of device may acquire and process event information when making changes such a modified value range or increased data item options.

○Business ID

This property indicates the ID of the DR activating business.

○DR program type

This property indicates the type of DR program.

○Program ID



© 2000 - 2023 ECHONET Consortium

This property indicates the ID of the contracted program.

○Implementation date

This property indicates the date of implementation of an event in terms of the year (YYYY), month (MM) and day (DD).

○Event ID

This property indicates the event ID in two bytes allocated uniquely for each implementation date.

・Byte 1: Indicates an event number specifying an event on the day in question, using 0x01-0x09 (1-9). The initial value is 0x01 (1), increasing sequentially.

・Byte 2: Indicates the version count allocated upon renewal of each event number in Byte 1 above, using 0x01-0xFD (1-253). The initial value is 0x01 (1), increasing sequentially when the status changes.

○ Status

This property indicates the event status.

The code used differs according to the DR program type.

○ Start time

This property indicates the event start time in hours (hh) and minutes (mm).

○ Continuous time

This property indicates the continuous time of an event in minutes (mm).

○ Units of value 1, Units of value 2

This property indicates the units and scale of values. (*For details, see “Notes on Values” below.)

As the value to be assigned differs according to the DR program type, units will also differ according to the items assigned. The units for value 1 in category n shall be Units of value 1, and those for value 2 in category n shall be Units of value 2.

When controlling the storage battery and electric vehicle charger/discharger class in DLC, the following units are used.

・Discharging: “ + ” units used.

・Charging: “－” units used.

○ Number of categories

The number of time categories in an event. It shall be possible to divide event time into several time bands and assign a value for each.

○ Category (1-N) continuous time

This property indicates the continuous time of a given category in units of minutes 0x0001-0xFFFF (1-65535).

The category in question shall start from the end of the previous category (or in the case of category 1, the event start time), and the total of all category continuous times shall be equal.



© 2000 - 2023 ECHONET Consortium

○ Category (1-N) value 1, category (1-N) value 2

This property indicates the information inside a given category. (*For details, see "Notes on Values" below.)

When assigned in the notification ID designation property, if event information corresponding to the notification ID is not retained, the notification ID shall be the notification ID assigned in the notification ID designation property, and the number of categories shall be 0x01 (1). All others besides these shall respond with 0xFF.

When assigned in the event information ID designation property, if event information corresponding to the event information ID is not retained, the number of categories shall be 0x01 (1). All others besides these shall respond with 0xFF.

*Notes on Values

Values 1 and 2 shown below are stored in each DR program type. The definitions of values in each DR program shall not be determined as requirements for the DR event controller class, as this part is implemented by the DR activating business as a DR program.

| **Program type** | **Value 1** | | | **Value 2** | | |
|---|---|---|---|---|---|---|
| | Value | Unit | Mandatory | Value | Unit | Mandatory |
| **CPP** | Price information | 0.01 yen/kWh、0.01 yen/kW、0.0001 yen/kWh<br>0.0001 yen/kW<br>(If no units are set, set 0xFE. This may also be set independently by each business.) | Value: ○<br>Unit:- | Setting 0xFFFE | Setting 0xFE | None |
| **PTR** | Price information | 0.01 yen/kWh、0.01 yen/kW、0.0001 yen/kWh<br>0.0001 yen/kW<br>(If no units are set, 0xFE. This may also be set independently by each business.) | Value: ○<br>Unit: - | Baseline information | kWh、kW、Wh、W<br>(If no units are set, 0xFE. This may also be set independently by each business.) | - |
| **Power use limit** | Contractual capacity | A、kW h、kW、Wh、W | ○ | Power use limit capacity | A、kW h、kW 、Wh、W | ○ |
| **DLC** | Load adjustment amount | A、kW h、kW、Wh、W<br>(Each of these has the pattern "+: discharging" and "-: charging".) | ○ | Setting 0xFFFE | Setting 0xFE | None |
| **Power generation limit** | Power generation limit value | % | ○ | Setting 0xFFFE | Setting 0xFE | None |
| **Electricity forecast** | Power supply-demand tightness (4 stages; if no value is set, 0xFFFE.) | Setting 0xFE | Value:-<br>Unit:None | Expected maximum power usage | % | ○ |
| **Level designation** | Degree of power reduction request (0-3) | Setting 0xFE | Value:○<br>Unit: None | Setting 0xFFFE | Setting 0xFE | None |

(15) Confirm/opt information

Devices (other devices) and own-device applications that access this class shall use this property to set the confirm/opt information of an event. Participation or non-participation settings are only used



© 2000 - 2023 ECHONET Consortium

for participation notification-type programs. Whether a program is the participation notification type or not depends on whether it has been determined in advance by the DR activating business. It also depends on this being recognized in advance on the device side.
When the participation setting of confirm/opt information has been changed, it is recommended that a judgment be made as to whether devices (other devices) and own-device applications that access this class correspond to targeted devices. The participation setting should not be changed without taking this into account.
When using the event information ID to write (Set) or read (Get) data, devices (other devices) and own-device applications that access this class shall assign the notification ID, confirm/opt information data type, business ID, DR program type, program ID, implementation date, event ID, and the participation setting, in that order, when writing (Set) the participation setting. When the DR event controller receives the participation setting but the writing of the participation setting is judged to have failed before completion, it is recommended that the participation setting be returned to its status before the writing commenced. If information on the event information ID corresponding to the event information ID designation for devices (other devices) and own-device applications that access this class is not retained by the DR event controller, a response of “Set impossible” shall be returned.
When reading (Get), the DR event controller shall set the confirm/opt information designated for the event information ID designation property in the order of notification ID, confirm/opt information data type, business ID, DR program type, program ID, implementation date, event ID, and participation setting.
If no confirm/opt information has been set for the event information ID designation property, all responses shall be 0xFF.

○ Notification ID

A one-byte ID allocated uniquely to each piece of event information for control when retained by the relevant device.

○ Confirm/opt information data type

The confirm/opt information data type property indicates the combination of data on business ID, DR program type, program ID, implementation date, event ID, and participation setting in confirm/opt information. This property indicates the confirm/opt information data type in a major version and a minor version. In these specifications, the major version is fixed as “1” and the minor version as “0”.

If there are compatible (*) data changes in future, such as a change in the specifications of this class, a change in the value range of the confirm/opt information, or an increase in data item options, the minor version will be increased. If there is no compatibility, such as a repositioning



© 2000 - 2023 ECHONET Consortium

due to the addition or deletion of data items, or differences in the meaning of the items themselves, the major version will be increased.

(*) Compatible: Means that the specifications of a new version incorporate those of a previous version. Devices writing or reading confirm/opt information to or from this class are judged as follows in relation to these versions.

・ When the major version is different, the data type is judged unmanageable and is not acquired.

・ When the major version is the same but the minor version is different, the data types are judged manageable and are thus acquired and processed.

With regard to writing, data of any version may be written from the device side, but if the data type cannot be processed by this class, a response of "Processing impossible" shall be returned.

○ Business ID

This property indicates the ID of the DR activating business.

○ DR program type

This property indicates the type of DR program.

○ Program ID

This property indicates the ID (a control number determined for each DR activating business) of the contracted program.

○ Implementation date

This property indicates the date of implementation of an event in terms of the year (YYYY), month (MM) and day (DD).

○ Event ID

This property indicates the event ID in two bytes allocated uniquely for each implementation date.

・Byte 1: Indicates the event number specifying an event on the day in question, using 0x01-0x09 (1-9). The initial value is 0x01 (1), increasing sequentially.

・Byte 2: Indicates the version count allocated upon renewal of each event number in Byte 1 above, using 0x01-0xFD (1-253). The initial value is 0x01 (1), increasing sequentially.

○ Participation setting

This property designates the settings for participation or non-participation in an event.

(16) Confirm/opt information status

The DR event controller sets the recognition status of confirm/opt information in the DR activating business.

This property indicates the status of confirm/opt information designated in the event information ID property in the order of participation setting acceptance status and event participation status when



© 2000 - 2023 ECHONET Consortium

reading (Get).

When no confirm/opt information status has been set in the event information ID designation property, all responses shall be 0xFF.

○ Participation setting acceptance status

This property indicates the response status of the DR activating business to the transmission of confirm/opt information.

It is recommended that INF be used to notify devices of a change in this property, in timing with a response from the DR activating business.

○ Event participation status

This property indicates the status of end-user participation in an event in the DR activating business.

Supplementary explanation

(A) Terms and abbreviations

The terms used when explaining this class shall be explained below.

| No. | Term | Explanation |
|---|---|---|
| 1 | DR event controller | A controller that sends and receives event information on demand-response (DR) between DR activating businesses and end-users. Incorporates DR event controller object. |
| 2 | Power use limit | A method of demand-response for requesting the upper limit of power usable within an end-user. |
| 3 | Power generation limit | A method of demand-response for requesting a reduction of power generation (e.g. photovoltaic or wind power generation) by the end-user. |
| 4 | Electricity forecast | The supply-demand tightness projected for the power grid as a whole (degree tightness of power demand compared to power supply). |
| 5 | DR program | The content of demand-response implementation contracted between DR activating businesses and end-users. |
| 7 | Event, DR event | Demand-response information notified by DR activating businesses to end-users. Includes information on activation of demand-response (e.g. dates and time bands) and information on cancellations. |
| 8 | OPT information | Information on the end-user's intention to participate and the act of participation in an event in demand-response. Options include "participation" and "non-participation". |
| 9 | OPT IN | In this class, this means "participation" in a demand-response event. |
| 10 | OPT OUT | In this class, this means "non-participation" in a demand-response event. |
| 11 | Notification ID | A serial number identifier assigned by the DR event controller to events received from the DR activating business by the DR event controller. This is used to make each event uniquely identifiable between the DR event controller and a device inside an end-user when the device acquires an event. Note that, since this is assigned output during a power outagely by the DR event controller of each end-user, the notification ID assigned to a given event for each end-user may not always match, even the same event is received from the DR activating business. |
| 12 | Event ID | An identifier assigned to each event by the DR activating business. If the event is activated by the same DR activating business, this identifier can be used to uniquely identify each event between the DR activating business and the device. If the event is the same, this event ID will be the same for all |



© 2000 - 2023 ECHONET Consortium

| | | |
|---|---|---|
| | | end-users. |
| 13 | Event information ID | An identifier consisting of the “Business ID”, “Program ID”, “Implementation date” and “Event ID”. The DR event controller needs to judge which OPT information sent from an event device corresponds to the event. Therefore, when the device that received the event sends OPT information relevant to that event to the DR event controller, this information included in the event is used to create an event information ID and respond by adding it to OPT information. |

(B) Basic sequence

The basic sequence of this class is explained below.

In the sequence prescribed for this class, the assumption is that events will be passed from the server of the DR activating business to the DR event controller by some means or other. This could be either by an inquiry from the DR event controller to the server of the DR activating business, or by the server of the DR activating business sending to the DR event controller. Which method is adopted is subject to specifications outside the domain, and is thus outside the scope of requirements for this class.

If the DR event controller is started up after activation of the DR, the event cannot be received. In this case, there shall be no particular provision as to whether the DR activating business should re-send the event or not, since it is outside the scope of requirements for this class.

(i) Sequence for devices to acquire event information synchronously

The sequence whereby devices synchronously acquire events notified from the server of the DR activating business is shown below.

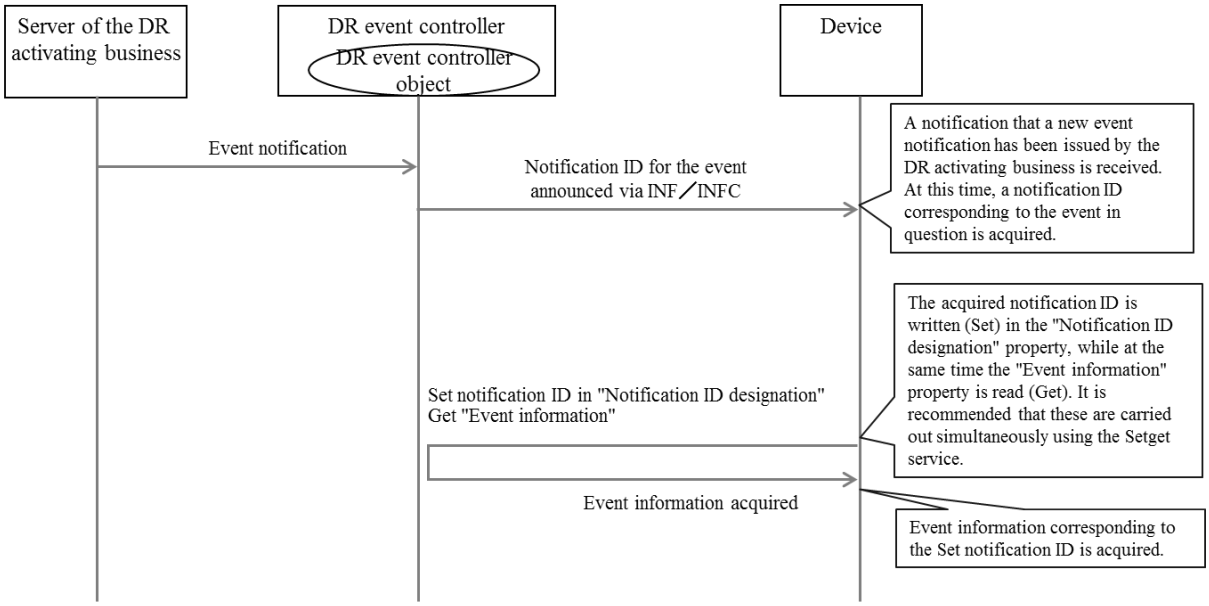




© 2000 - 2023 ECHONET Consortium

(ii) Sequence for devices to acquire event information asynchronously

The sequence whereby the DR event controller retains events notified from the server of the DR activating business and devices acquire event information asynchronously in relation to that notification is shown below.

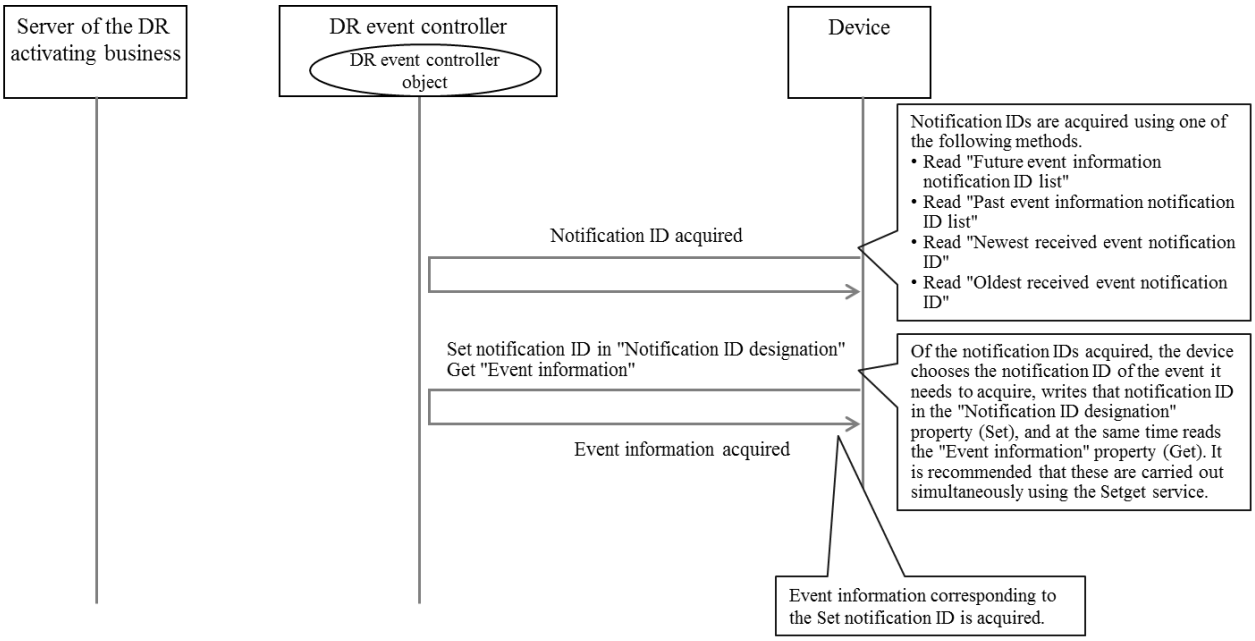


(iii) Sequence for devices to acquire current or next event information

The sequence whereby the DR event controller retains events notified from the server of the DR activating business and devices acquire the current or next event information is shown below. In this case, devices may acquire event information without acquiring or designating a notification ID.

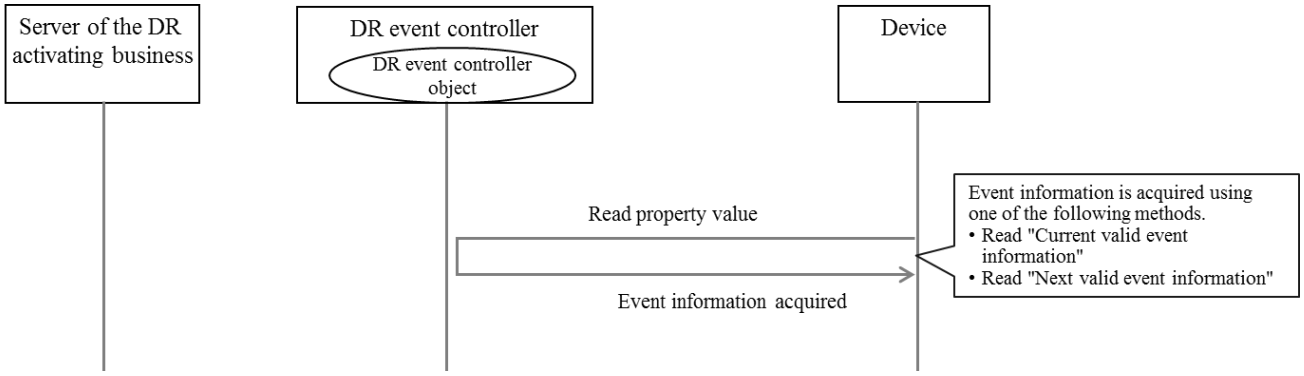




© 2000 - 2023 ECHONET Consortium

(iv) Sequence for DR event controllers to receive events synchronously and control devices

The sequence whereby the DR event controller synchronously acquires retains events notified from the server of the DR activating business and controls devices based on the content is shown below.

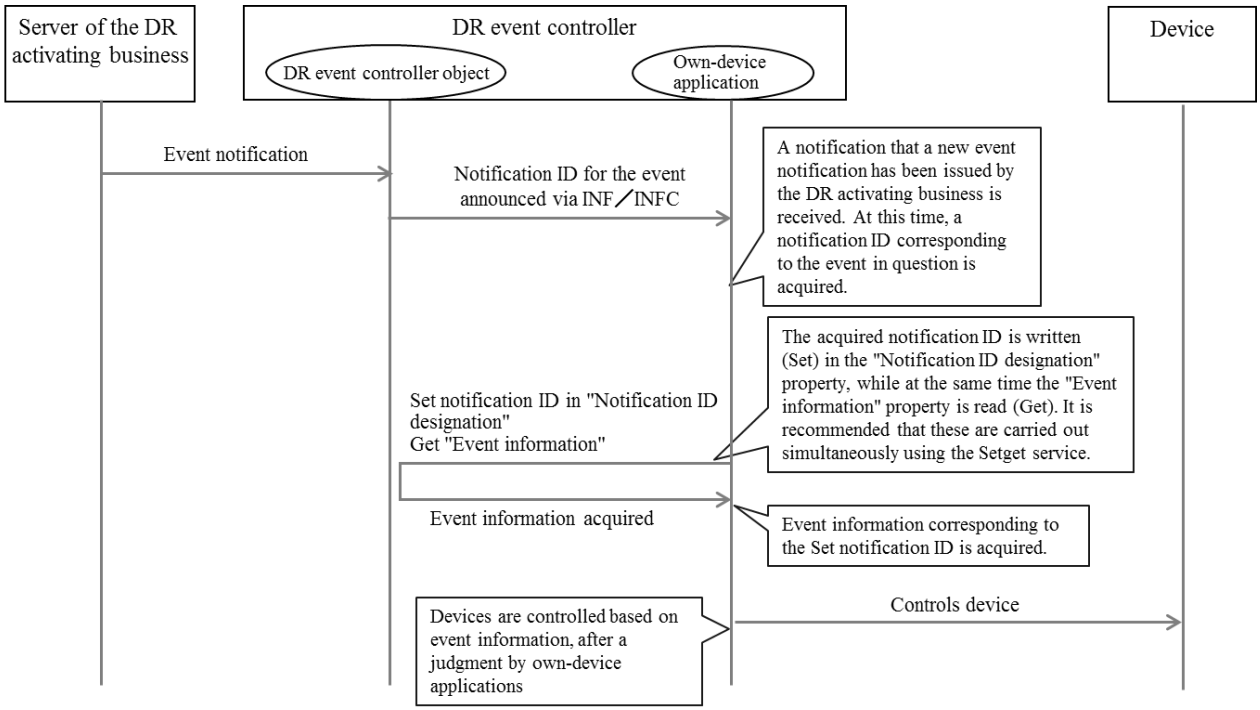


(v) Sequence for sending confirm/opt information from devices

The sequence whereby confirm/opt information is sent from a device and the device subsequently confirms how that confirm/opt information has been accepted by the server of the DR activating business is shown below.



© 2000 - 2023 ECHONET Consortium

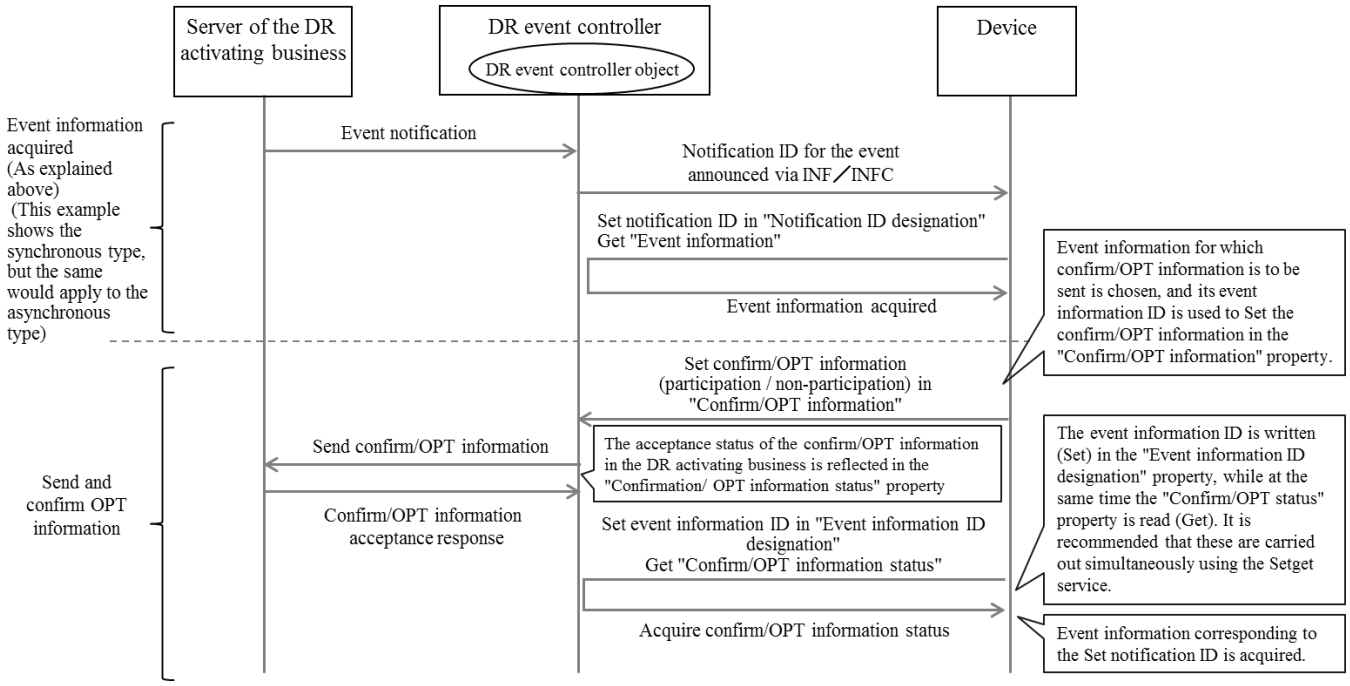


(vi) Sequence for sending confirm/opt information from users

The sequence whereby confirm/opt information on an event is sent from a user and the user subsequently confirms how that confirm/opt information has been accepted by the server of the DR activating business is shown below.



© 2000 - 2023 ECHONET Consortium

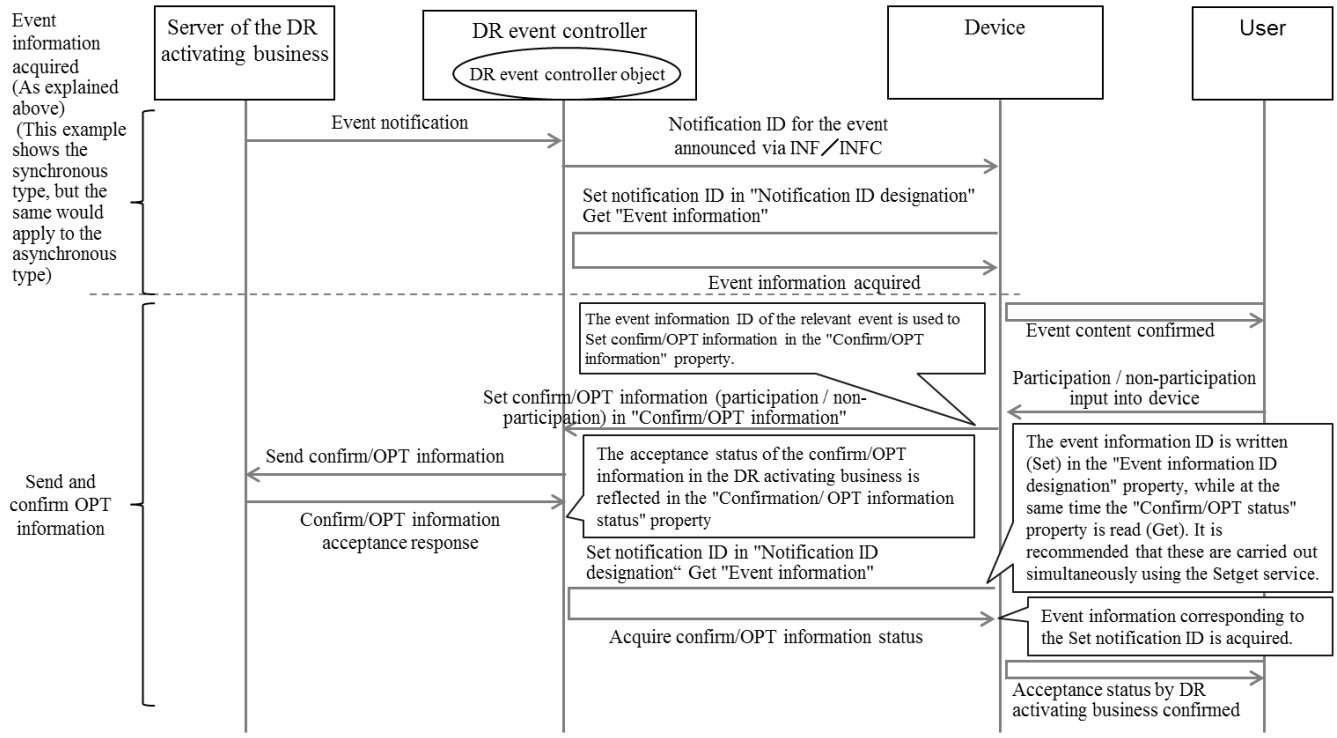


(C) Instance generation units

Instances shall be generated for each business ID, each DR program type, and each program ID. That is, when the business ID, DR program type, or program ID of the DR activating business are different, separate instances must be generated each time. Or to put it another way, it is not possible for the same instance to be shared by different businesses, different DR program types, or different programs.

( i ) If the DR event controller exchanges event information with more than one DR activating business

In this case, instances corresponding to each DR activating business shall be incorporated in the DR event controller. As shown in the figure below, devices that acquire event information read the “Business ID” property of each instance and search for instances corresponding to the DR activating business that needs to acquire event information. Devices that acquire event information should already know the business ID of the DR activating business that needs to acquire the information.



© 2000 - 2023 ECHONET Consortium

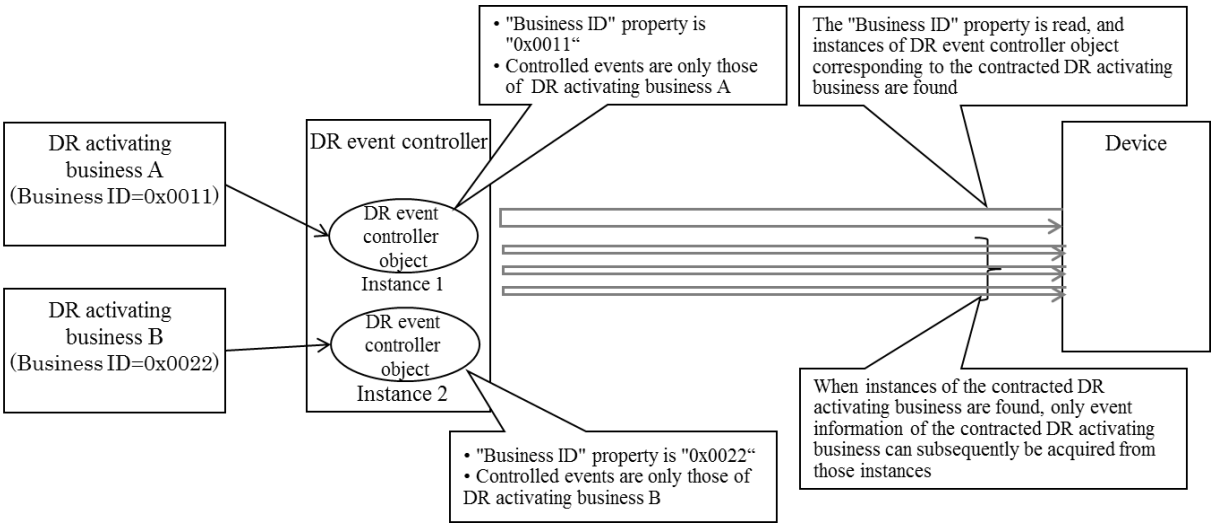


( ii ) If the DR event controller exchanges events in more than one DR program with the DR activating business

In this case, instances corresponding to each DR program shall be incorporated in the DR event controller. As shown in the figure below, devices that acquire event information read the "Business ID" property, "Program type" property, and "Program ID" property of each instance and search for instances corresponding to the DR program that needs to acquire event information. Devices that acquire event information should already know the business ID, program type, and program ID of the DR program that needs to acquire the information.

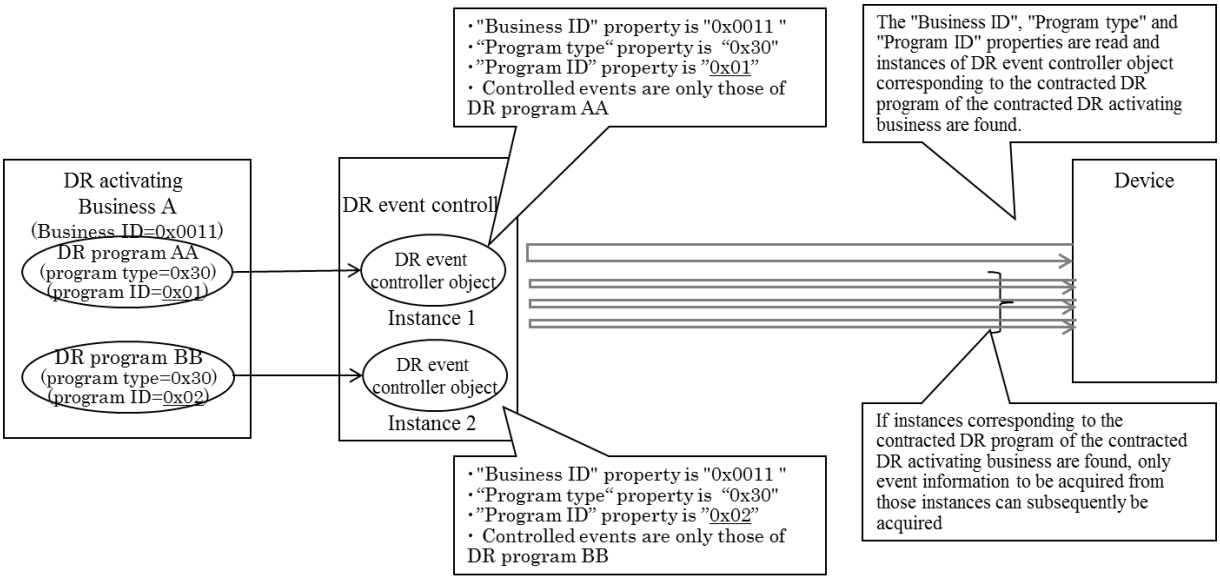


(D) DR event status (if the program type is CPP, PTR, or Level designation)



© 2000 - 2023 ECHONET Consortium

The DR event (event) status takes one of the values of “Advance notification” (0x30), “Decision notification” (0x31), “Cancellation notification” (0x32), “Advance notification (test)” (0x40), “Decision notification (test)” (0x41), or “Cancellation notification (test)” (0x42). As shown below, there are 10 patterns whereby events with the same start time are sent from the DR activating business to the DR event controller. Events with the same start time are allocated the same value for the “Event number” of the “Event ID” inside the “Event information” property. Meanwhile, the “Version count” of the “Event ID” inside the “Event information” property (initial value 0x01) is incremented gradually in line with transitions in the patterns.

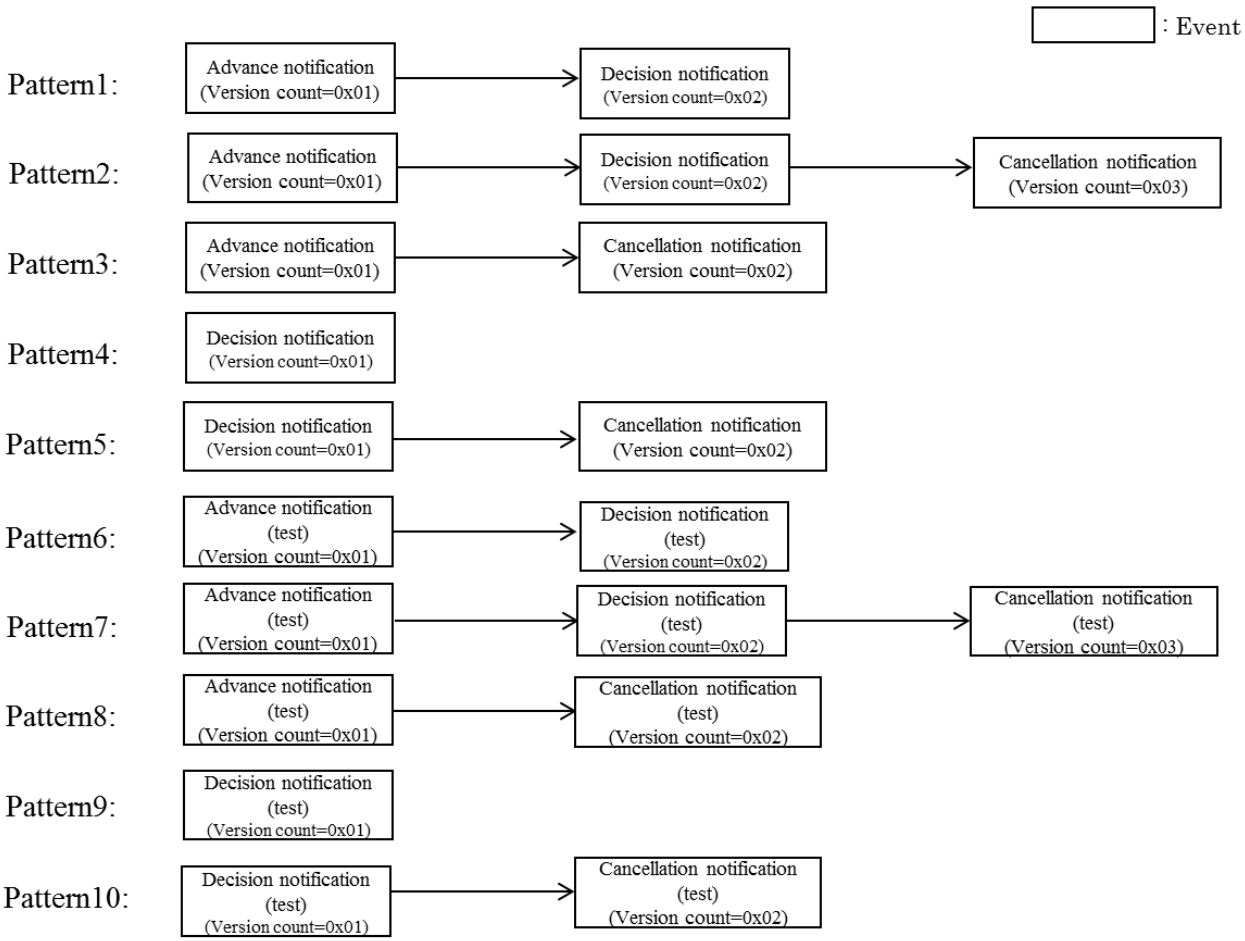


Therefore, the implementation status of DR with the same start time controlled by the device will go through the status transitions shown below.



© 2000 - 2023 ECHONET Consortium

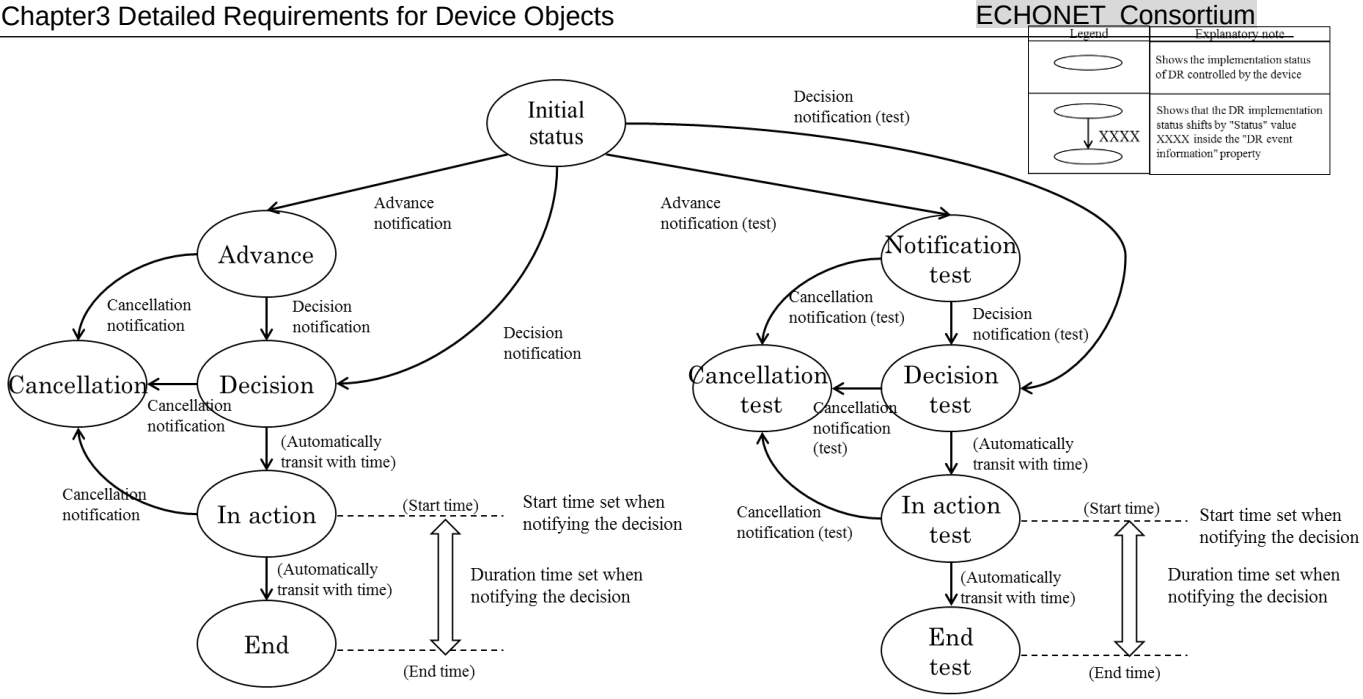


(E) DR event status (if the program type is Power use limit, Power generation limit, or DLC)

The DR event (event) status takes one of the values of “Advance notification” (0x30), “Decision notification” (0x31), “Cancellation notification” (0x32), “Activation notification” (0x50), “End notification” (0x51), “Advance notification (test)” (0x40), “Decision notification (test)” (0x41), “Cancellation notification (test)” (0x42), “Activation notification (test)” (0x60), or “End notification (test)” (0x61). As shown below, there are 18 patterns whereby events with the same start time are sent from the DR activating business to the DR event controller. Events with the same start time are allocated the same value for the “Event number” of the “Event ID” inside the “Event information” property. Meanwhile, the “Version count” of the “Event ID” inside the “Event information” property (initial value 0x01) is incremented gradually in line with transitions in the patterns.



© 2000 - 2023 ECHONET Consortium

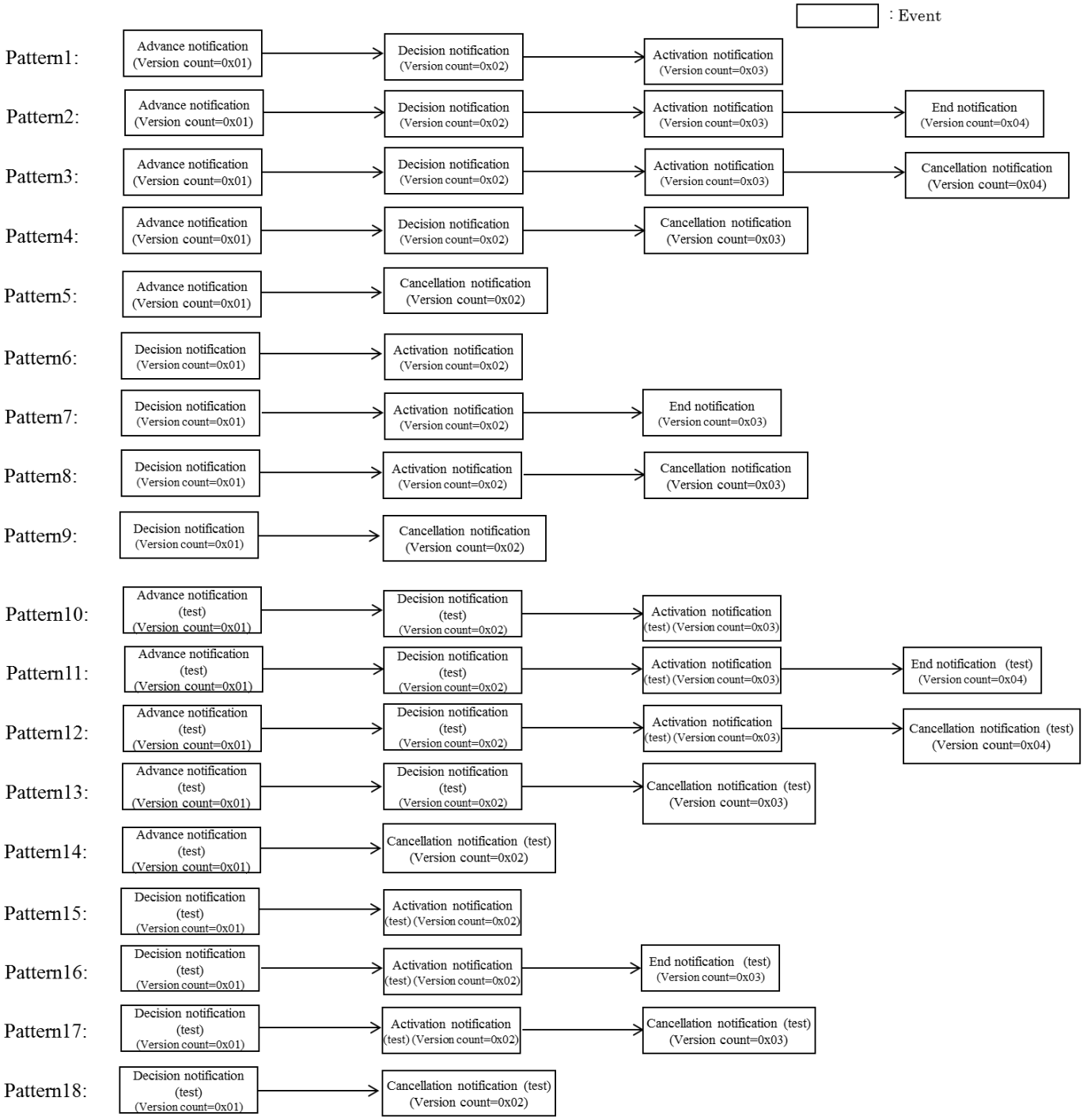


Therefore, the implementation status of DR with the same start time controlled by the device will go through the status transitions shown below.



© 2000 - 2023 ECHONET Consortium

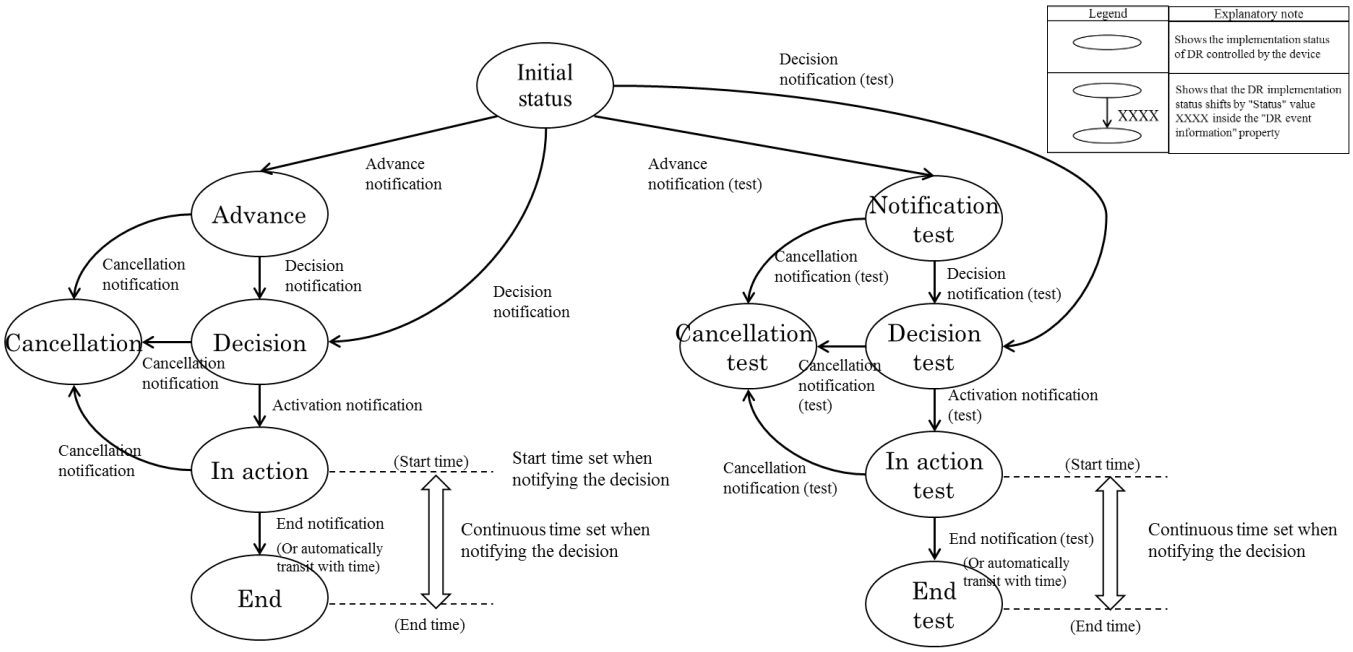


In DR program types with activation notification and end notification, the start time and end time will be handled as follows.

<Start time>

①If the activation notification is received earlier than the start time, DR shall be started at the start time.

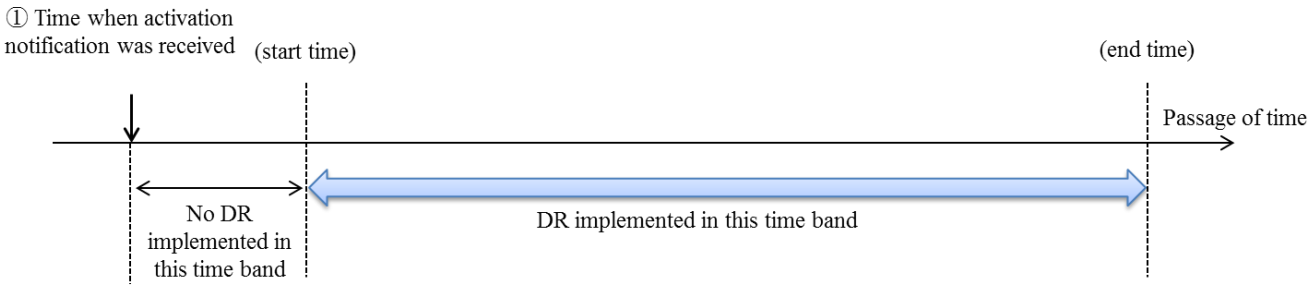


②If the activation notification is received after the start time, DR shall be started immediately after the activation notification is received (however, if the end time has already passed, DR shall not be implemented).



© 2000 - 2023 ECHONET Consortium

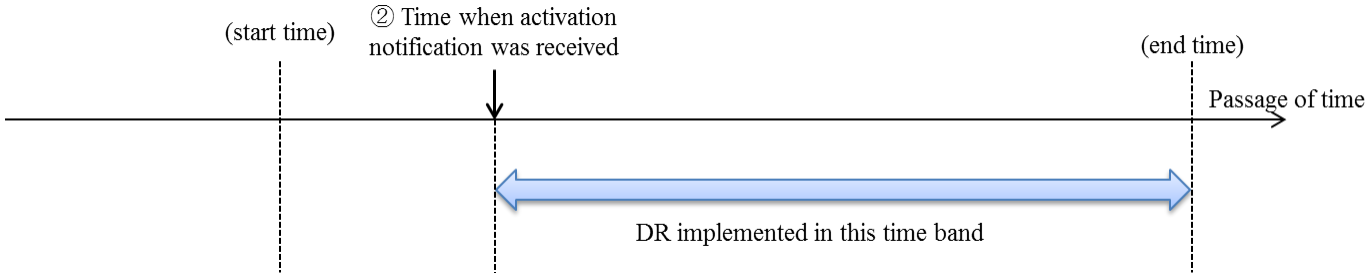


<End time>

①If the end notification is received earlier than the end time, DR shall be finished immediately after the end notification is received.

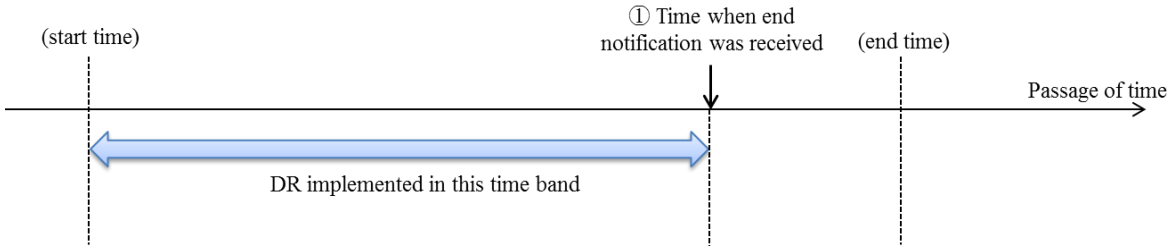


②If no end notification has arrived by the end time, DR shall be finished at the end time.

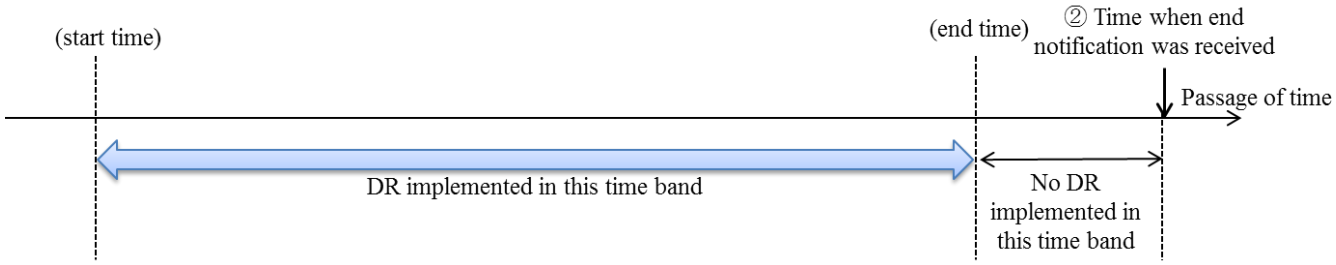


(F) DR event status (if the program type is Electricity forecast)

The DR event (event) status takes one of the values of "Advance notification" (0x30), "Decision notification" (0x31), "Cancellation notification" (0x32), "Advance notification (test)" (0x40), "Decision notification (test)" (0x41), or "Cancellation notification (test)" (0x42). As shown below, there are 4 patterns whereby events with the same start time are sent from the DR activating business to the DR event controller. Events with the same start time are allocated the same value for the "Event number" of the "Event ID" inside the "Event information" property. Meanwhile, the



© 2000 - 2023 ECHONET Consortium

"Version count" of the "Event ID" inside the "Event information" property (initial value 0x01) is incremented gradually in line with transitions in the patterns.

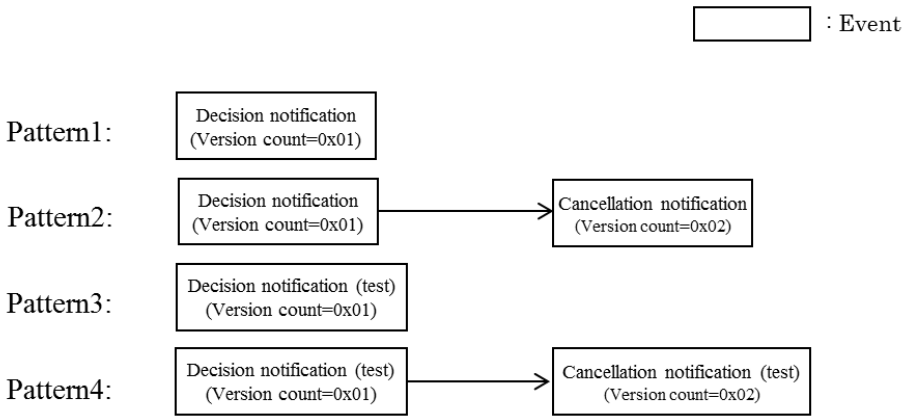


Therefore, the implementation status of DR with the same start time controlled by the device will go through the status transitions shown below.

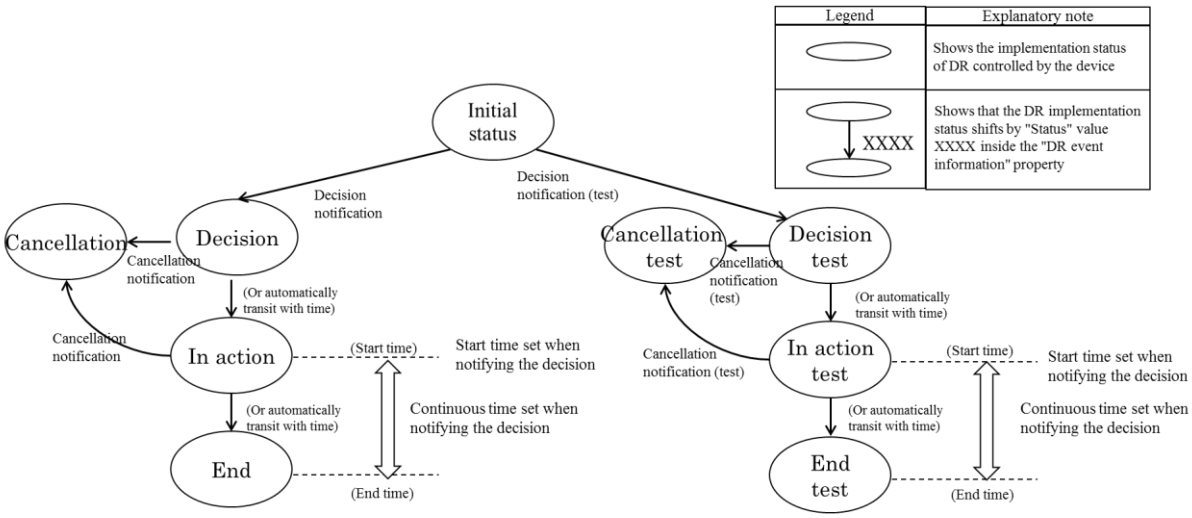


(G) Specific examples of event information acquisition

The method whereby devices (other devices) or own-device applications acquire event information will be explained below with the aid of specific examples.

( i ) Devices and applications that acquire event information

Event information is acquired either by devices (other devices) or own-device applications, as shown below.



© 2000 - 2023 ECHONET Consortium

<Devices acquire event information.>

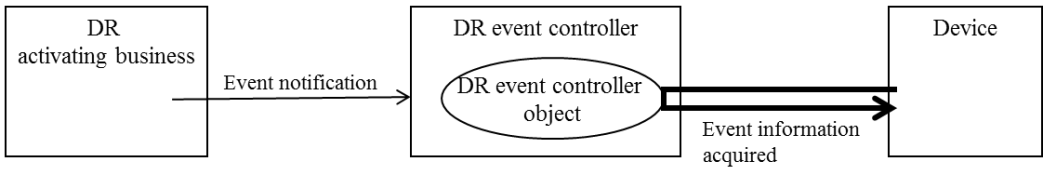


<Applications acquire event information.>

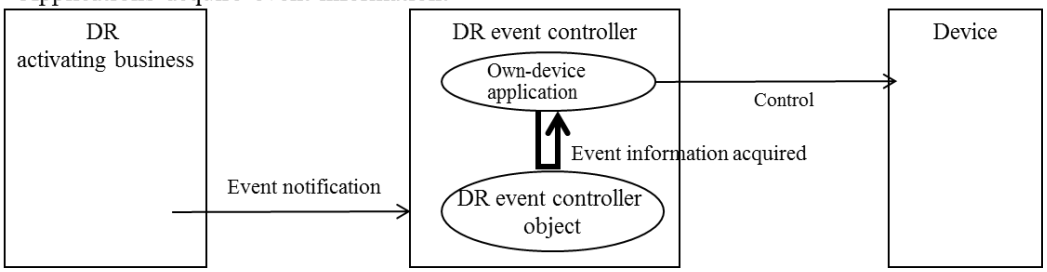


( ii ) Assigning event IDs and notification IDs

DR event controllers use event IDs and notification IDs to control event information. The event ID is an identifier assigned to each item of event information by the DR activating business that issues that event information. It is used by devices (other devices) or own-device applications to identify event information issued from the DR activating business. Meanwhile, the notification ID is an identifier assigned to each item of event information by the DR event controller. It is used as a serial number enabling devices (other devices) or own-device applications to acquire event information from DR event controller object without any omissions.

A specific example of event ID assignment is shown below. The figure shows three events distributed by the DR activating business (①, ② and ③). In this example, ①, ② and ③ have the same implementation date, while ② and ③ also have the same time band but a different status. The event ID comprises the event number and the version count. The event number is assigned as uniquely showing DR implementation time bands for each implementation date. The version count is assigned to identify each event with the same implementation date and the same time band. In the case of the example below, the event number of ① is “01”, and those of ② and ③ are incremented from this event number to “02”. Again, the version count in ② is “01”, which in ③ is incremented to “02”.



© 2000 - 2023 ECHONET Consortium

Event notified by DR activating business A

Assigned by DR activating business

| Event | Notification date and time | Implement-ation date | Time band | | Event ID | | Status |
|---|---|---|---|---|---|---|---|
| | | | Start time | Continuous time | Event No. | Version count | |
| ① | 2014/11/27 12:00 | 2014/11/30 | 08:00 | 120 | 01 | 01 | Decision notification |
| ② | 2014/11/26 12:00 | 2014/11/30 | 17:00 | 120 | 02 | 01 | Advance notification |
| ③ | 2014/11/27 13:00 | 2014/11/30 | 17:00 | 120 | 02 | 02 | Decision notification |

Precondition for this example: Events implemented on the same day

Precondition for this example: Implementation in two time bands

When both the implementation date and the time band are the same, the event number is the same

When the implementation date is the same but the time band is different, the event number is incremented

When the status of an event with the same implementation date and same time band changes, the version count is incremented

A specific example of notification ID assignment is shown below. This figure shows an example in which the three events controlled by the DR activating business in the figure above (①, ② and ③) are distributed in the sequence ②⇒①⇒③ by the DR event controller. The DR event controller assigns notification IDs to events in the order in which they are received. In the case of the example below, events are received in the sequence ②⇒①⇒③, and thus the notification ID will be “01” for event ②, “02” for event ①, and “03” for event ③. Note that, as notification IDs are assigned in the order in which events are received by the DR event controller, they are not always allocated in order of implementation date or time band.



© 2000 - 2023 ECHONET Consortium

Assigned by DR activating business

Event notified by DR activating business A

| Event | Notification date and time | Implementation date | Time band | | Event ID | | Status | Notification sequence |
|---|---|---|---|---|---|---|---|---|
| | | | Start time | Continuous time | Event No. | Version count | | |
| ① | 2014/11/27 12:00 | 2014/11/30 | 08:00 | 120 | 01 | 01 | Decision notification | No. 2 |
| ② | 2014/11/26 12:00 | 2014/11/30 | 17:00 | 120 | 02 | 01 | Advance notification | No. 1 |
| ③ | 2014/11/27 13:00 | 2014/11/30 | 17:00 | 120 | 02 | 02 | Decision notification | No. 3 |

Precondition for this example:
Notification sequence
②>①>③

Assigned by DR activating business

Events received by DR event controller from DR activating business A

| Event | Received date and time | Notification ID | Implementation date | Time band | | Event ID | | Status |
|---|---|---|---|---|---|---|---|---|
| | | | | Start time | Continuous time | Event No. | Version count | |
| ② | 2014/11/26 12:00 | 01 | 2014/11/30 | 17:00 | 120 | 02 | 01 | Advance notification |
| ① | 2014/11/27 12:00 | 02 | 2014/11/30 | 08:00 | 120 | 01 | 01 | Decision notification |
| ③ | 2014/11/27 13:00 | 03 | 2014/11/30 | 17:00 | 120 | 02 | 02 | Decision notification |

DR event controller assigns notification IDs in order of the date and time received.
As this is a serial number, it is gradually incremented.

Note: Not necessarily arranged in order of implementation date and time.

( iii ) Cases of event information acquisition usage

Devices (other devices) or own-device applications that acquire event information may basically acquire event information in the order distributed by the DR activating business without any omissions, by acquiring event information from DR event controller object in the order of notification IDs. However, since devices (other devices) or own-device applications do not necessarily need all of the event information retained by the DR event controller, specifications in the DR event controller class are set to enable devices (other devices) or own-device applications to acquire the desired event information efficiently.

The table below shows six usage cases for the acquisition of event information and eight properties for which DR event controller class specifications are prepared for this purpose.

| No. | Usage Case | Explanation |
|---|---|---|
| UC1 | Acquiring information on the event currently in progress | Of event IDs with the event ID status "In progress", acquiring information on decision notification events. Single events only. *1 |
| UC2 | Acquiring information on the event due to be implemented next | Of event IDs with the event ID status "Advance notice", acquiring information on decision notification and advance notification events. Single events only. *1 |



© 2000 - 2023 ECHONET Consortium

| | | |
|---|---|---|
| UC3 | Acquiring information on all events retained by the DR event controller class | Acquiring all event information retained by the DR event controller class. *2 |
| UC4 | Acquiring event information not yet acquired | Of all event information retained by the DR event controller class, acquiring information on events not yet acquired. *2 |
| UC5 | Acquiring information on past events | Of all event information retained by the DR event controller class, acquiring information on events with an end time before the current time. *2 |
| UC6 | Acquiring information on events due to be implemented in future | Of all event information retained by the DR event controller class, acquiring information on events with a start time earlier than the current time. *2 |

*1 Within a DR program, events cannot be implemented in parallel.

*2 Including cancelled events.

| Property name | Detailed data items |
|---|---|
| Operation status | |
| Business ID | |
| DR Program type | |
| Program ID | |
| Current valid event information | |
| Next valid event information | |
| Future event information notification ID list | List count |
| | Notification ID list |
| Past event information notification ID list | List count |
| | Notification ID list |
| Newest received event notification ID | |
| Oldest received event notification ID | |
| Notification ID designation | |
| Event information ID designation | |
| Target device information list | |
| Event information | |
| Confirm/OPT information | |
| Confirm/OPT information status | |

These eight properties are used to supply devices (other devices) and own-device applications with information for efficiently acquiring event information retained by the DR event controller.

( iv ) Preconditions for specific examples

Event information controlled by the DR event controller is assumed to be as shown below.



© 2000 - 2023 ECHONET Consortium

| Notification ID | Implementation date | Remarks |
|---|---|---|
| 40 | 7/6 | Oldest value of notification ID |
| 41 | 9/1 | |
| 42 | 7/5 | |
| 43 | 7/7 | |
| 44 | 8/11 | |
| 45 | 7/25 | |
| 46 | 8/4 | |
| 47 | 7/31 | |
| 48 | 8/31 | Newest value of notification ID |

Preconditions for DR event controller object
- There are 9 items of event information retained by DR event controller object (assigned notification IDs 40-48, respectively)
  - The event received furthest in the past has notification ID = 40
  - The event received most recently has notification ID = 48
- Current date is 8/1
  - Events with an implementation date before 8/1 are past events that have already been implemented (notification ID = 40, 42, 43, 45, 47)
    Applies to
  - Events with an implementation date after 8/1 are future events due to be implemented from now on (notification ID = 41, 44, 46, 48)
    Applies to

( v ) UC1: Acquiring information on the DR event currently in progress

These are cases of usage seeking to acquire information on the event being implemented at the current time.

In such cases, only the desired event information may be acquired by reading the “Current valid event information” property.

In the specific example shown in (iv) above, there is no relevant event information, and therefore a value of “0x00” is returned.

| Property name | Detailed data items |
|---|---|
| Operation status | |
| Business ID | |
| DR Program type | |
| Program ID | |
| Current valid event information | |
| Next valid event information | |
| Future event information notification ID list | List count |
| | Notification ID list |
| Past event information notification ID list | List count |
| | Notification ID list |
| Newest received event notification ID | |
| Oldest received event notification ID | |
| Notification ID designation | |
| Event information ID designation | |
| Target device information list | |
| Event information | |
| Confirm/OPT information | |
| Confirm/OPT information status | |

Usage case:
Acquiring information on events valid at the current time.

Acquisition method:
Read "Current valid event information" property.

Acquisition result:
- If there are any valid events at the current time, event information is returned.
- If there is no valid event at the current time, 0x00 is returned.

(In other words, by reading this property, it can be confirmed whether or not there are currently valid events.)

Notes:
- This case targets events subject to a "Decision notification" or "Activation notification ". Events subject to an "Advance notification" or "Cancellation notification" are not included.
- In the same DR program, different events in the same time band are not valid.
- Opted-out events are included.

( vi ) UC2: Acquiring information on the DR event due to be implemented next

These are cases of usage seeking to acquire information on the next valid event after the current time.



© 2000 - 2023 ECHONET Consortium

In such cases, only the desired event information may be acquired by reading the “Next valid event information” property.

In the specific example shown in (iv) above, the event with the notification ID = 46 due to be implemented on August 4 could fall into this category. This event information is returned if the event status is one of “Decision notification”, “Decision notification (test)”, “Activation notification” or “Activation notification (test)”. Events subject to “Advance notification”, “Advance notification (test)”, “Cancellation notification” or “Cancellation notification (test)” could correspond to the next event on August 11. Thus, the respective status is confirmed and the response content decided in the same way.

| Property name | Detailed data items |
|---|---|
| Operation status | |
| Business ID | |
| DR Program type | |
| Program ID | |
| Current valid event information | |
| Next valid event information | |
| Future event information notification ID list | List count |
| | Notification ID list |
| Past event information notification ID list | List count |
| | Notification ID list |
| Newest received event notification ID | |
| Oldest received event notification ID | |
| Notification ID designation | |
| Event information ID designation | |
| Target device information list | |
| Event information | |
| Confirm/OPT information | |
| Confirm/OPT information status | |

Usage case:
Acquiring information on events valid at the next time.

Acquisition method:
Read “Next valid event information" property.

Acquisition result:
- If a future implementation date and time band has been designated and there is a next valid event, that event information is returned.
- If there is no valid event at the future time, 0x00 is returned. (In other words, by reading this property, it can be confirmed whether or not there are future valid events.)

Notes:
- This case targets events subject to a "Decision notification" or "Activation notification ". Events subject to an "Advance notification" or "Cancellation notification" are not included.
- In the same DR program, different events in the same time band are not valid.
- Opted-out events are included.

( vii ) UC3: Acquiring information on all events

These are cases of usage aimed at acquiring all event information retained by DR event controller object.

The notification IDs of all events retained by DR event controller object can be known by reading the “Newest received event notification ID” property and the “Oldest received event notification ID” property, respectively. Thereafter, the event information of all acquired notification IDs may be read from the “Oldest received event notification ID” to the “Newest received event notification ID”. Specifically, the notification ID to be acquired is written in the “Notification ID designation” property, immediately after which the “Event information” property is read. (It is recommended that the SetGet service be used to process both properties in a single message.)



© 2000 - 2023 ECHONET Consortium

| Property name | Detailed data items |
|---|---|
| Operation status | |
| Business ID | |
| DR Program type | |
| Program ID | |
| Current valid event information | |
| Next valid event information | |
| Future event information notification ID list | List count |
| | Notification ID list |
| Past event information notification ID list | List count |
| | Notification ID list |
| Newest received event notification ID | |
| Oldest received event notification ID | |
| Notification ID designation | |
| Event information ID designation | |
| Target device information list | |
| Event information | |
| Confirm/OPT information | |
| Confirm/OPT information status | |

Usage case:
Acquiring all event information retained by DR event controller object.

Acquisition method:
- Read the "Newest received event notification ID" property and the "Oldest received event notification ID" property, respectively.
- Read the event information of all acquired notification IDs from the "Oldest received event notification ID" to the "Newest received event notification ID".
  Specifically, the notification ID to be acquired is written in the "Notification ID designation" property, immediately after which the "Event information" property is read. (It is recommended that the SetGet service be used to process both properties in a single message.)

Acquisition result:
- By applying the above process sequentially, all event information can be acquired.

Notes:
- The value range of the notification ID should be taken into account. After it has reached the upper limit, the minimum value of 0x01 is assigned to the notification ID.

In the specific example shown in (iv) above, the "Oldest received event notification ID" is "40" and the "Newest received event notification ID" is "48". Therefore, the respective event information with notification IDs of 40, 41, 42, 43, 44, 45, 46, 47 and 48 may be read.

| Notification ID | Implement-ation date | Remarks |
|---|---|---|
| 40 | 7/6 | Oldest value of notification ID |
| 41 | 9/1 | |
| 42 | 7/5 | |
| 43 | 7/7 | |
| 44 | 8/11 | |
| 45 | 7/25 | |
| 46 | 8/4 | |
| 47 | 7/31 | |
| 48 | 8/31 | Newest value of notification ID |

By using the "Notification ID designation" to designate event information ranging from the "Oldest received event notification ID" (= 40) to the "Newest received event notification ID" (= 48), all event information may be acquired.

Acquisition target

( viii ) UC4: Acquiring event information not yet acquired

These are cases of usage aimed at acquiring event information not yet acquired by devices (other devices) or own-device applications.

The "Newest received event notification ID" property is read, and the notification ID thus acquired is compared with the ID controlled as the most recent notification ID by devices (other



© 2000 - 2023 ECHONET Consortium

devices) or own-device applications themselves (*1). If the values are the same, there is no unacquired event information. If the values are different, there is unacquired event information, and so all notification IDs from the next value after *1 to the "Oldest received event notification ID" should be read in sequence. Specifically, the notification ID to be acquired is written in the "Notification ID designation" property, immediately after which the "Event information" property is read. (It is recommended that the SetGet service be used to process both properties in a single message.)

| Property name | Detailed data items |
|---|---|
| Operation status | |
| Business ID | |
| DR Program type | |
| Program ID | |
| Current valid event information | |
| Next valid event information | |
| Future event information notification ID list | List count |
| | Notification ID list |
| Past event information notification ID list | List count |
| | Notification ID list |
| Newest received event notification ID | |
| Oldest received event notification ID | |
| Notification ID designation | |
| Event information ID designation | |
| Target device information list | |
| Event information | |
| Confirm/OPT information | |
| Confirm/OPT information status | |

Usage case:
Acquiring event information not yet acquired by devices (other devices) or own-device applications.

Acquisition method:
- Read the "Newest received event notification ID".
- Notification ID of Oldest received event notification ID"is compared with the ID controlled as the most recent notification ID by devices (other devices) or own-device applications themselves (*1). If the values are the same, there is no unacquired event information. If the values are different, there is unacquired event information, and so all notification IDs from the next value after *1 to the "Oldest received event notification ID" should be read in sequence. Specifically, the notification ID to be acquired is written in the "Notification ID designation" property, immediately after which the "Event information" property is read. (It is recommended that the SetGet service be used to process both properties in a single message.)

Acquisition result:
- By applying the above process sequentially, all event information can be acquired.

Notes:
- The value range of the notification ID should be taken into account. After it has reached the upper limit, the minimum value of 0x01 is assigned to the notification ID.

In the specific example shown in (iv) above, the "Newest received event notification ID" is "48", while the most recent notification ID retained by the device (or own-device application) itself is "45". This shows that there is unacquired event information, and that event information with notification IDs of 46, 47 and 48, respectively, may be read.



© 2000 - 2023 ECHONET Consortium

| Notification ID | Implementa-tion date | Remarks |
|---|---|---|
| 40 | 7/6 | Oldest value of notification ID |
| 41 | 9/1 | |
| 42 | 7/5 | |
| 43 | 7/7 | |
| 44 | 8/11 | |
| 45 | 7/25 | |
| 46 | 8/4 | |
| 47 | 7/31 | |
| 48 | 8/31 | Newest value of notification |

The notification IDs of unacquired event information can be known by acquiring the "Newest received event notification ID" (= 48) and comparing it with the most recent notification ID (45) retained by the device (or own-device application) itself.

The most recent notification ID (45) retained by the device (or own-device application) itself is "45"

Acquisition target

( ix ) UC5: Acquiring information on past events

These are cases of usage aimed at acquiring all event information with past implementation dates and time bands (but limited to information retained by DR event controller object). The notification IDs of events from past implementation dates and time bands retained by DR event controller object can be known by reading the “Past event information notification ID list” property and acquiring the notification ID list included in it. Thereafter, the event information of all notification IDs included in the acquired notification ID list may be read. Specifically, the notification ID to be acquired is written in the “Notification ID designation” property, immediately after which the “Event information” property is read. (It is recommended that the SetGet service be used to process both properties in a single message.)



© 2000 - 2023 ECHONET Consortium

| Property name | Detailed data items |
|---|---|
| Operation status | |
| Business ID | |
| DR Program type | |
| Program ID | |
| Current valid event information | |
| Next valid event information | |
| Future event information notification ID list | List count |
| | Notification ID list |
| Past event information notification ID list | List count |
| | Notification ID list |
| Newest received event notification ID | |
| Oldest received event notification ID | |
| Notification ID designation | |
| Event information ID designation | |
| Target device information list | |
| Event information | |
| Confirm/OPT information | |
| Confirm/OPT information status | |

Usage case:
Acquiring all event information retained with past implementation dates and time bands.

Acquisition method:
- Read the "Past event information notification ID list".
- Read the event information of all notification IDs included in the acquired notification ID list of "Past event information notification ID list".
  Specifically, the notification ID to be acquired is written in the "Notification ID designation" property, immediately after which the "Event information" property is read. (It is recommended that the SetGet service be used to process both properties in a single message.)
- If the list count in the "Past event information notification ID list" is "0", it means that no event information has been retained.

Acquisition result:
- By applying the above process sequentially, event information of can be acquired.

Notes:
- Only event information retained by DR event controller object may be acquired.

In the specific example shown in (iv) above, the notification IDs in the "Past event information notification ID list" are "47, 45, 43, 40, 42". This shows that event information with notification IDs of 47, 45, 43, 40 and 42, respectively, may be read.

| Notification ID | Implementation date | Remarks |
|---|---|---|
| 40 | 7/6 | Oldest value of notification ID |
| 41 | 9/1 | |
| 42 | 7/5 | |
| 43 | 7/7 | |
| 44 | 8/11 | |
| 45 | 7/25 | |
| 46 | 8/4 | |
| 47 | 7/31 | |
| 48 | 8/31 | Newest value of notification |

Acquisition target

Values in the "Past event information notification ID list":

| | |
|---|---|
| List count | 5 |
| Notification ID list | 47 45 43 40 42 |

The list is sorted in sequence from the nearest start time to the present.

Lists of notification IDs from past events can be acquired by reading the "Past event information notification ID list" property.

( x ) UC6: Acquiring information on the events due to be implemented in future

These are cases of usage aimed at acquiring all event information with future implementation dates and time bands (but limited to information retained by DR event controller object).

The notification IDs of events with future implementation dates and time bands retained by DR event controller object can be known by reading the "Future event information notification ID



© 2000 - 2023 ECHONET Consortium

list" property and acquiring the notification ID list included in it. Thereafter, the event information of all notification IDs included in the acquired notification ID list may be read. Specifically, the notification ID to be acquired is written in the "Notification ID designation" property, immediately after which the "Event information" property is read. (It is recommended that the SetGet service be used to process both properties in a single message.)

| Property name | Detailed data items |
|---|---|
| Operation status | |
| Business ID | |
| DR Program type | |
| Program ID | |
| Current valid event information | |
| Next valid event information | |
| Future event information notification ID list | List count |
| | Notification ID list |
| Past event information notification ID list | List count |
| | Notification ID list |
| Newest received event notification ID | |
| Oldest received event notification ID | |
| Notification ID designation | |
| Event information ID designation | |
| Target device information list | |
| Event information | |
| Confirm/OPT information | |
| Confirm/OPT information status | |

Usage case:
Acquiring all event information retained with future implementation dates and time bands.

Acquisition method:
- Read the "Future event information notification ID list".
- Read the event information of all notification IDs included in the acquired notification ID list of "Future event information notification ID list".
  Specifically, the notification ID to be acquired is written in the "Notification ID designation" property, immediately after which the "Event information" property is read. (It is recommended that the SetGet service be used to process both properties in a single message.)
- If the list count in the "Past event information notification ID list" is "0", it means that no event information has been retained.

Acquisition result:
- By applying the above process sequentially, event information of can be acquired.

Notes:
- Only event information retained by DR event controller object may be acquired.

In the specific example shown in (iv) above, the notification IDs in the "Future event information notification ID list" are "46, 44, 48, 41". This shows that event information with notification IDs of 46, 44, 48 and 41, respectively, may be read.



© 2000 - 2023 ECHONET Consortium

| Notification ID | Implementation date | Remarks |
|---|---|---|
| 40 | 7/6 | Oldest value of notification ID |
| 41 | 9/1 | |
| 42 | 7/5 | |
| 43 | 7/7 | |
| 44 | 8/11 | |
| 45 | 7/25 | |
| 46 | 8/4 | |
| 47 | 7/31 | |
| 48 | 8/31 | Newest value of notification |

Acquisition target

Values in the "Future event information notification ID list":

| | |
|---|---|
| List count | 4 |
| Notification ID list | 46 44 48 41 |

The list is sorted in sequence from the nearest start time to the present.

Lists of notification IDs from future events can be acquired by reading the "future event information notification ID list" property.

(H) Specific examples of acquiring confirm/opt information

The method whereby devices (other devices) or own-device applications acquire confirm/opt information shall now be explained.

Confirm/opt information is identified via event information IDs. Devices (other devices) or own-device applications can acquire the desired confirm/opt information by writing the event information ID corresponding to the confirm/opt information they need to acquire in the "Event information ID designation" property, then immediately reading the "Confirm/opt information" property. (It is recommended that the SetGet service be used to process both properties in a single message.)

| Property name | Detailed data items |
|---|---|
| Operation status | |
| Business ID | |
| DR Program type | |
| Program ID | |
| Current valid event information | |
| Next valid event information | |
| Future event information notification ID list | List count |
| | Notification ID list |
| Past event information notification ID list | List count |
| | Notification ID list |
| Newest received event notification ID | |
| Oldest received event notification ID | |
| Notification ID designation | |
| Event information ID designation | |
| Target device information list | |
| Event information | |
| Confirm/OPT information | |
| Confirm/OPT information status | |

Usage case:
Acquiring confirm/opt information.

Acquisition method:
- Write the event information ID corresponding to the confirm/opt information they need to acquire in the "Event information ID designation" property, then immediately read the "Confirm/opt information" property. (It is recommended that the SetGet service be used to process both properties in a single message.)

Acquisition result:
- Confirm/OPT information corresponding to the designated event information ID is returned.

Notes:
- Only event information retained by DR event controller objects may be acquired.

(I) Using OPT information

The sequence for setting OPT information acceptance from more than one device shall be explained below.



© 2000 - 2023 ECHONET Consortium

If event non-participation from device B is accepted by the DR activating business after event participation from device A has been accepted, processing shall follow the rule of most recent priority. An example of the specific sequence in this case is shown below.

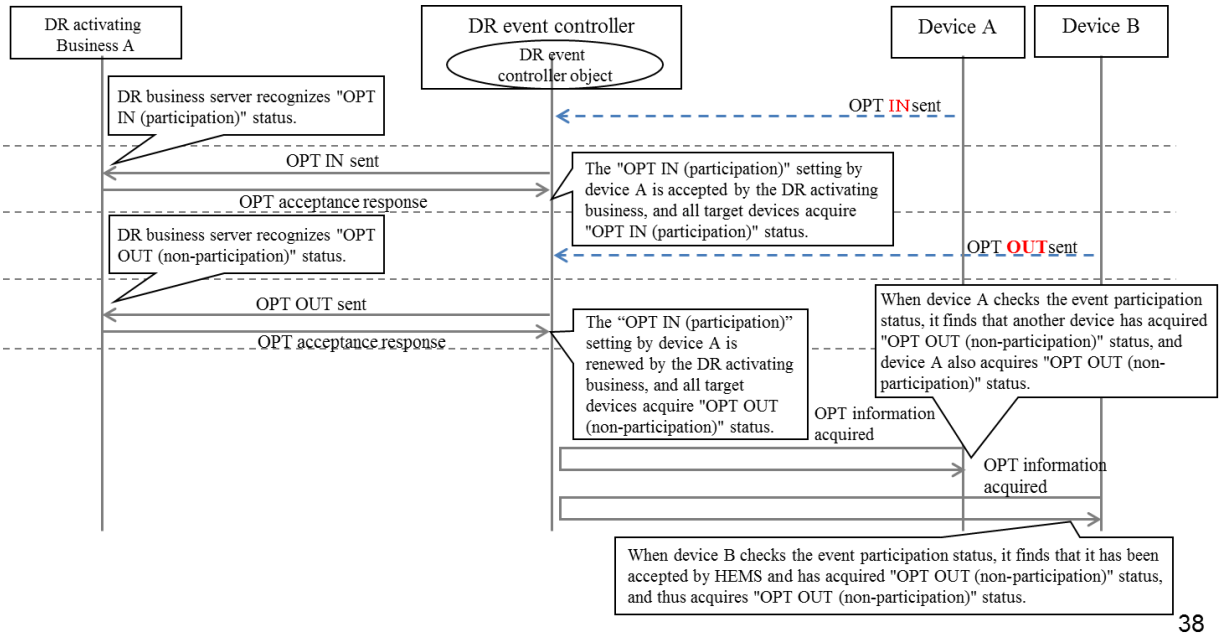

38

(J) Specific examples of acquiring confirm/opt information status

The method whereby devices (other devices) or own-device applications acquire confirm/opt information status shall now be explained.

Confirm/opt information status is identified via event information IDs. Devices (other devices) or own-device applications can acquire the desired confirm/opt information status by writing the event information ID corresponding to the confirm/opt information status they need to acquire in the "Event information ID designation" property, then immediately reading the "Confirm/opt information status" property. (It is recommended that the SetGet service be used to process both properties in a single message.)



© 2000 - 2023 ECHONET Consortium

| Property name | Detailed data items |
|---|---|
| Operation status | |
| Business ID | |
| DR Program type | |
| Program ID | |
| Current valid event information | |
| Next valid event information | |
| Future event information notification ID list | List count |
| | Notification ID list |
| Past event information notification ID list | List count |
| | Notification ID list |
| Newest received event notification ID | |
| Oldest received event notification ID | |
| Notification ID designation | |
| Event information ID designation | |
| Target device information list | |
| Event information | |
| Confirm/OPT information | |
| Confirm/OPT information status | |

Usage case:
Acquiring confirm/opt information status.

Acquisition method:
- Write the event information ID corresponding to the confirm/opt information status they need to acquire in the "Event information ID designation" property, then immediately read the "Confirm/opt information status" property. (It is recommended that the SetGet service be used to process both properties in a single message.)

Acquisition result:
- Confirm/OPT information corresponding to the designated event information ID is returned.

Notes:
- Only confirm/opt information status retained by DR event controller object may be acquired.

(K) Categories

During continuous time when categories are changed, this change is made when there is a change in the conditions of value 1 or value 2.

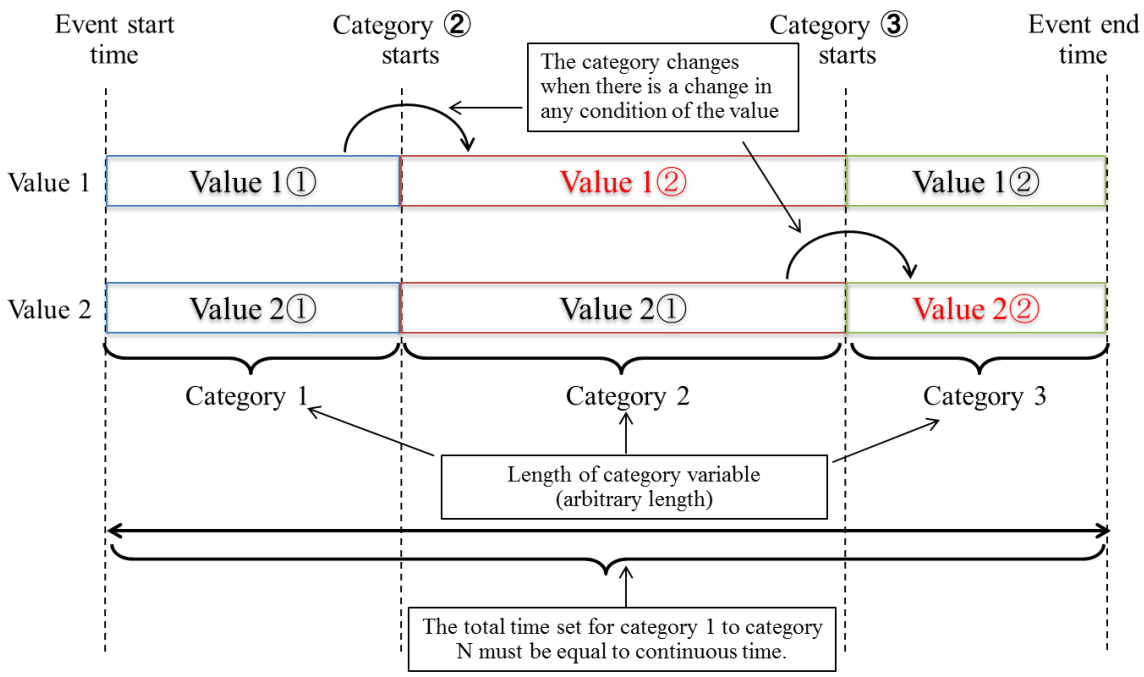


(L) Target device information list

The "Target device information list" property shall be explained below.

When a DR activating business designates a DR target device, information on that device is stored in this property and recognized by devices (other devices) or own-device applications. In these



© 2000 - 2023 ECHONET Consortium

specifications, devices are designated not for each event but for each DR program, and the designated devices are fixed (constant).

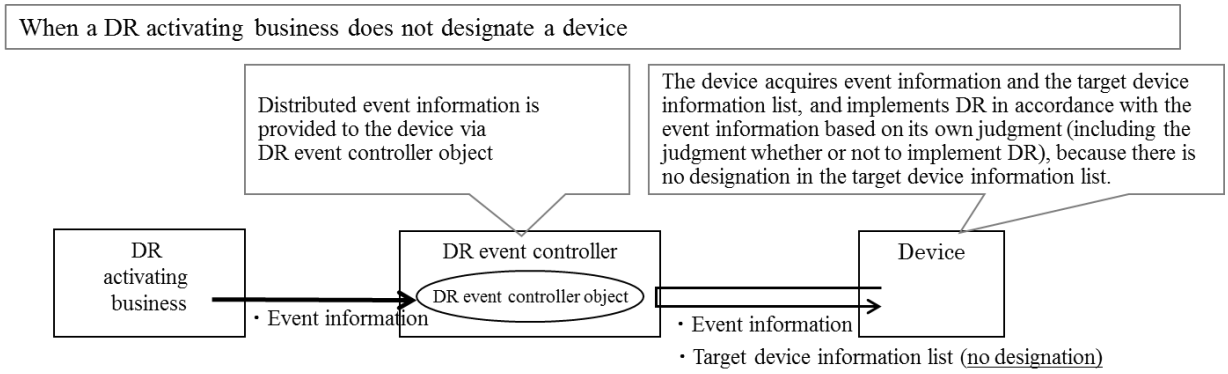


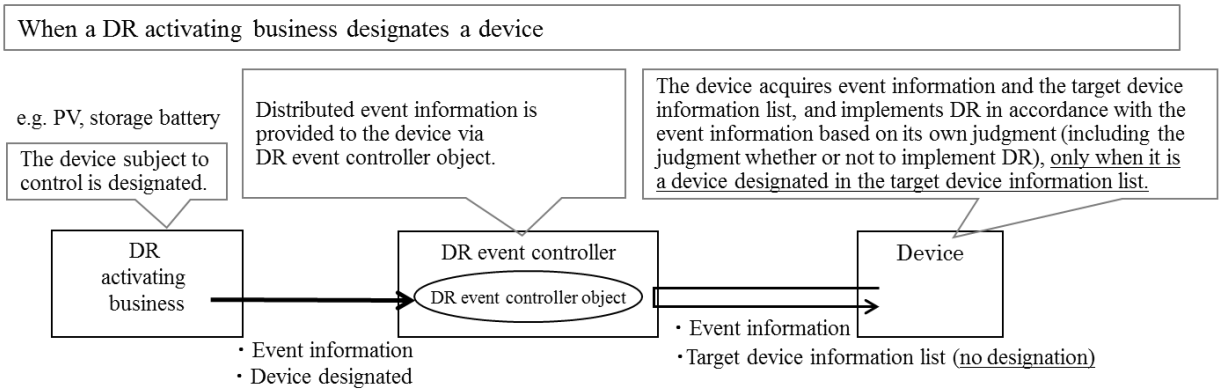


Designation of devices takes three forms: designation of device type, designation of specific devices, and designation of installation location. These may be combined.

| **Target** | **Content** | **Designation method** |
|---|---|---|
| Device type | Designation of just device type, e.g. PV or storage battery | ・Class group code<br>・Class code<br>・(Instance is not specified.) |
| Specific devices | Designation of specific devices | ・Class group code<br>・Class code<br>・Instance code |
| | | ・Identification number |



© 2000 - 2023 ECHONET Consortium

| | | |
|---|---|---|
| | | ・Individual identification information |
| Installation location | Designation of installation location | ・Installation location |

The “Target device information list” property is used to designate devices. The “Target device information list” property has the structure of a list, and lists target device information. Target device information comprises the following data.

Bytes 1-3: EOJ
Byte 4: Installation location
Bytes 5-6: Individual identification information
Bytes 7-23: Identification number

| | | |
|---|---|---|
| EOJ | Class group code | 1 byte |
| | Class code | 1 byte |
| | Instance code | 1 byte |
| Installation location | | 1 byte |
| Individual identification information | | 2 bytes |
| Identification number | | 17 bytes |

Information may also be designated in combination. There are nine patterns for combination, as shown in the table below.

| # | Class group code | Class code | Instance code (including all-instance code) | Installation location | Individual identification information | Identification number |
|---|---|---|---|---|---|---|
| 1 | ○ | ○ | ○ | | | |
| 2 | ○ | ○ | ○ | ○ | | |
| 3 | ○ | ○ | ○ | | ○ | |
| 4 | ○ | ○ | ○ | | | ○ |
| 5 | ○ | ○ | ○ | ○ | ○ | |
| 6 | ○ | ○ | ○ | ○ | | ○ |
| 7 | | | | ○ | | |
| 8 | | | | | ○ | |
| 9 | | | | | | ○ |

(M) Destinations for INF / INFC

Destinations for status change announcements regarding the “Newest received event notification ID” property (INF / INFC) shall be node profile object. Therefore, the DEOJ value setting of the message shall be 0x0EF001.



© 2000 - 2023 ECHONET Consortium

## 3．6．4 Requirements for parallel processing combination-type power control class

Class group code : 0x05

Class code : 0xFA

Instance code : 0x01–0x7F (0x00: All-instance specification code)

| Property name | EPC | Contents of property<br>Value range (decimal notation) | Data type | Data size | Unit | Access rule | Mandatory | Announcement at status change | Remark |
|---|---|---|---|---|---|---|---|---|---|
| Operation status | 0x80 | This property indicates the ON/OFF status.<br>ON = 0x30, OFF = 0x31 | unsigned char | 1 byte | — | Set<br>Get | <br>○ | ○ | |
| Power deviation information | 0xC0 | This property indicates information related to the difference between total power and reference power.<br>1 byte: 0x00 (reference voltage = 200V), 0x01(reference voltage = 100V)<br>2 to 3 bytes: Deviated power<br>-256A to +256A | unsigned char<br>+<br>signed short | 3 bytes | No units<br>+<br>A | Set | ○ | | |
| Power reduction information | 0xC1 | This property indicates the reducible electric energy of the entire system and the parameters to calculate the electric energy reduced by each device.<br>1 byte: Maximum reducible electric energy<br>0x00 to 0xFF<br>2 bytes: Number of devices<br>0x00 to 0xFF | unsigned char<br>+<br>unsigned char | 2 bytes | kVA<br>+<br>No units | Set | ○ | | |
| Transmission interval | 0xC2 | This property indicates the transmission interval at which the power deviation information is transmitted.<br>Indicated in 8-bit.<br>bit 7:<br>0b; seconds, 1b; minutes,<br>bit 6-4; 0 fixed<br>bit 3-0: transmission interval<br>0000b; 1, 0001b; 2,<br>0010b: 3, 0011b; 5,<br>0100b; 10, 0101b; 20,<br>0110b: 30, 0111b; 60 | unsigned char | 1 byte | | Set | ○ | | |
| Rated power consumption threshold | 0xC3 | This property indicates the threshold for rated power consumption that performs power control | unsigned char | 3 | No units<br>＋ | Set | | | |



© 2000 - 2023 ECHONET Consortium

| | | | | | | | | | |
|---|---|---|---|---|---|---|---|---|---|
| | | 1 byte: Data type<br>2 to 3 bytes: Threshold<br>[If data type is 0x01]<br>0x0000: All devices<br>0x0001: Devices that are 500W or higher<br>0x0002: Devices that are 1000W or higher<br>0x0003: Devices that are 2000W or higher<br>[If data type is 0x02]<br>0x0000 to 0xFFFD (0W to 65,533W) | +<br>unsigned short | | Listed within value range | | | | |

Note: In the "Announcement at status change" column, ○ denotes mandatory processing when the property is implemented.

(1) Operation status (property inherited from the device object super class)

This property indicates whether the function intrinsic to this class is operating or not (ON/OFF). In the node incorporating this class, if the function of this class is started concurrently with the start of node operation, this property may be implemented at a fixed value of 0x30 (Operation status ON).

(2) Power deviation information

This property sets the difference between the total electric energy that is used and the target electric energy. If the value of the first byte is 0x00, the numbers indicated by the second and third bytes represent the electric current at a voltage of 200V; if the value of the first byte is 0x01, the numbers indicated by the second and third bytes represent the electric current at a voltage of 100V.

(3) Power reduction information

This property indicates the reduction amount of the entire system, and the number of devices equipped with a parallel processing combination-type power control class within the same ECHONET Lite domain.

(4) Transmission interval

This property indicates the interval at which power deviation information is transmitted from devices that transmit power deviation information to devices equipped with a parallel processing combination-type power control class.

bit 7: Indicates the unit of values indicated in b3 to b0. Indicates 0b (seconds), 1b (minutes).

bit 6 to 4: 0000 fixed

The following numbers are indicated in bit 3 to 0. (0000b: 1, 0001b: 2, 0010b: 3, 0011b: 5, 0100b: 10, 0101b: 20, 0110b: 30, 0111b: 60)

(5) Rated power consumption threshold

Distributed control is performed in cases where the rated power exceeds the power value designated



© 2000 - 2023 ECHONET Consortium

by this property.

If the first byte is 0x01,

and the second to third byte is 0x0000: All devices are applicable

0x0001: Devices that are 500W or higher are applicable

0x0002: Devices that are 1000W or higher are applicable

0x0003: Devices that are 2000W or higher are applicable

If the first byte is 0x02, the devices of the numbers indicated by the second to third byte and higher are applicable. For example, if the value of the second to third byte is 0x0064, devices that are 100W or higher are applicable.



© 2000 - 2023 ECHONET Consortium

# 3．7 Audiovisual-related Device Class Group

This section specifies the requirements, including the code values and property specifications, for each of the device objects which are ECHONET objects and belong to the Audiovisual-related Device Class Group (class group designation code X1 = 0x06).

Table 3-8 lists the classes covered by this section. The detailed requirements for each of the classes are specified in the respective subsection of this section. Each property specified as a required or conditionally required property with the ○ mark or a conditionally required property symbol in the "Mandatory" column of the applicable row of the property table is a property that must be implemented in combination with the applicable service(s) whenever the class to which that property belongs is implemented in a device.

**Table 3-8 List of Objects of the Audiovisual-related Device Class Group**

| Class group code | Class code | Class name | Detailed requirements | Remark |
|---|---|---|---|---|
| 0x06 | 0x00 | Reserved for future use | | |
| | 0x01 | Display | ○ | |
| | 0x02 | Television | ○ | |
| | 0x03 | Audio | ○ | |
| | 0x04 | Network camera | ○ | |
| | 0x05-0xFF | Reserved for future use | | |

Note: ○ indicates a detail is explained including a property structure in APPENDIX.



© 2000 - 2023 ECHONET Consortium

## 3．7．1 Requirements for display class

Class group code : 0x06
Class code : 0x01
Instance code : 0x01–0x7F (0x00: All-instance specification code)

These requirements for the display class shall apply to character display function-related sections (display sections, display control sections, display data buffering sections, etc.) of display devices which belong to the Audiovisual-related Device Class Group, and to character display function-related sections of devices equipped with a display function which belong to other class groups. New properties for character display functions (such as properties relating to characteristics of characters used in character displays (font, size, color, etc.), methods to display characters on displays and display locations) will be added in the future as necessary.

Specifically, these requirements for the display class shall apply to displays dedicated to displaying characters and to character display sections (LCD display sections) of devices of all classes.

| Property name | EPC | Contents of property / Value range (decimal notation) | Data type | Data size | Unit | Access rule | Mandatory | Announcement at status change | Remark |
|---|---|---|---|---|---|---|---|---|---|
| Operation status | 0x80 | This property indicates the ON/OFF status of the weighing machine operation | unsigned char | 1 byte | — | Set | ○ | ○ | |
| | | ON=0x30, OFF=0x31 | | | | Get | ○ | | |
| Display control setting | 0xB0 | Sets the status as to whether the displaying of characters is enabled or disabled and acquires the current setting. | unsigned char | 1 byte | — | Set/ Get | | | |
| | | Displaying enabled: 0x30<br>Displaying disabled: 0x31 | | | | | | | |
| Character string setting acceptance status | 0xB1 | This property indicates whether or not the device is ready to accept the character string to present to the user. | unsigned char | 1 byte | — | Get | ○ | ○ | |
| | | Ready: 0x30 Busy: 0x31 | | | | | | | |
| Supported character codes | 0xB2 | This property indicates, in a bit map format, the implemented character codes that can be used to present character strings. | unsigned char × 2 | 2 bytes | — | Get | ○ | | |



© 2000 - 2023 ECHONET Consortium

| | | | | | | | | | |
|---|---|---|---|---|---|---|---|---|---|
| | | Bit 0 ANSI X3.4<br>Implemented: 1<br>Not implemented: 0<br>Bit 1 Shift-JIS<br>Implemented: 1<br>Not implemented: 0<br>Bit 2 JIS<br>Implemented: 1<br>Not implemented: 0<br>Bit 3 Japanese EUC<br>Implemented: 1<br>Not implemented: 0<br>Bit 4 UCS-4<br>Implemented: 1<br>Not implemented: 0<br>Bit 5 UCS-2<br>Implemented: 1<br>Not implemented: 0<br>Bit 6 Latin-1<br>Implemented: 1<br>Not implemented: 0<br>Bit 7 UTF-8<br>Implemented: 1<br>Not implemented: 0<br>Bit 8 and succeeding bits:<br>reserved for future use 0 | | | | | | | |
| Character string to present to the user | 0xB3 | Sets the character string to present to the user, the length of the character string and the character code to use to present the character string and acquires the stored setting.<br>The highest-order byte shall indicate the byte sequence data length of the character string to present to the user and the second-highest-order byte shall indicate the character code to use. The second-highest-order byte shall be followed by a byte containing “0x00” (reserved for future use), which shall be followed by a number of bytes, each assigned with one of the first and succeeding bytes, starting with the first byte, of the character string to present to the user. The lowest-order byte shall be assigned with the last byte of the character string to present to the user. | unsigned char × Max 247 | Max 247 bytes | — | Set<br>Get | ○ | | |



© 2000 - 2023 ECHONET Consortium

| | | | | | | | | | |
|---|---|---|---|---|---|---|---|---|---|
| | | First byte: Byte code sequence data length of the character string to present to the user converted to the hexadecimal format<br>Second byte: Character code to use<br>Third byte: reserved for future use<br>Fourth and succeeding bytes: Byte code sequence of the character string to present to the user (max. 244 bytes)<br>Each of the character codes listed below shall be assigned with the indicated code value.<br>ANSI X3.4=0x01<br>Shift –JIS=0x02<br>JIS =0x03<br>Japanese EUC=0x04<br>UCS-4 =0x05<br>UCS-2 =0x06<br>Latin -1=0x07<br>UTF-8=0x08<br>0x09 and succeeding values = reserved for future use | | | | | | | |
| Length of character string accepted | 0xB4 | This property indicates the total number of bytes of the newest character string to present to the user which has been set and is being held.<br>First byte: 0x00 to 0xF4<br>Second byte: 0x00 (reserved for future use) | unsigned char | 2 byte | — | Get | ○ | | |

Note: In the “Announcement at status change” column, ○ denotes mandatory processing when the property is implemented.

(1) Operation status (inherited from the super class property)

Sets the ON/OFF status of the display and acquires the current setting. The values “0x30” and “0x31” shall be assigned to the ON and OFF states, respectively. In the case where an “energy service” is to be supported, the implementation of the SET function for this property is mandatory.

(2) Display control setting

A SET on this property sets the status of this class as to whether the displaying of characters is enabled or disabled. A GET on this property acquires the current setting. The values “0x30” and “0x31” shall be assigned to the “Displaying enabled” and “Displaying disabled” states, respectively. Because this property is a function to just switch between the “Displaying enabled” and “Displaying disabled” states, SETs on the “Character string to present to the user” property must be effective even when the “Display control setting” property value is “0x31” (Displaying disabled) as long as the “Character string setting acceptance status” property value is “0x30.”

(3) Character string setting acceptance status

A GET on this property shows the status as to whether this class is ready to accept the



© 2000 - 2023 ECHONET Consortium

"Character string to present to the user" property settings. The values "0x30" and "0x31" shall be assigned to the "Ready" state (i.e. the state in which the settings can be accepted) and "Busy" state (i.e. the state in which the settings cannot be accepted), respectively.

(4) Supported character codes

A SET on this property shows a bit map list of the implemented character codes (sets of coded characters) that can be used by this class to present character strings. The value "0" indicates that the code in question is not implemented, and the value "1" indicates that the code in question is implemented.

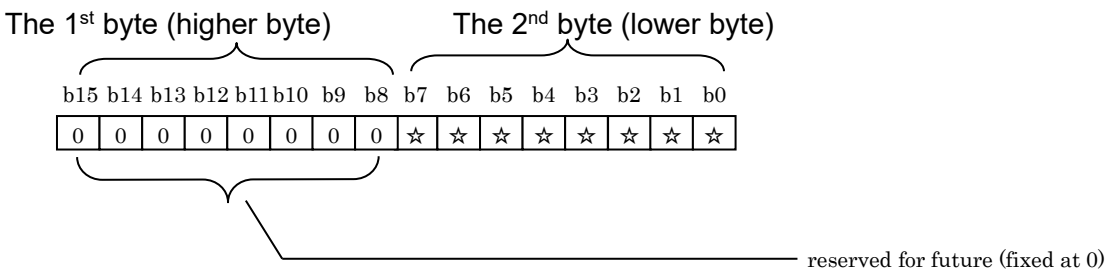


The relationship between the bits and codes is as follows:

Bit 0 － ANSI X3.4: Implemented = 1 Not implemented = 0

Bit 1 － Shift-JIS: Implemented = 1 Not implemented = 0

Bit 2 － JIS: Implemented = 1 Not implemented = 0

Bit 3 － Japanese EUC: Implemented = 1 Not implemented = 0

Bit 4 － UCS-4: Implemented = 1 Not implemented = 0

Bit 5 － UCS-2: Implemented = 1 Not implemented = 0

Bit 6 － Latin-1: Implemented = 1 Not implemented = 0

Bit 7 － UTF-8: Implemented = 1 Not implemented = 0

Bits 8 to 15 － reserved for future use (fixed at 0)

For the detailed specifications for the character codes, refer to the following standards:

- ANSI X3.4 : American National Standards Institute, "Coded character set -- 7-bit American national standard code for information interchange", ANSI X3.4-1986.(ASCII)
- Shift-JIS : JIS X 0208:1997 "7-bit and 8-bit double byte coded Kanji sets for information interchange"
- JIS : ISO/IEC 2022 :1994 Information technology -- Character code structure and extension techniques, ISO-2022-JP (JIS X 0208:1997)
- Japanese EUC : ISO/IEC 2022 :1994 Information technology -- Character code structure and extension techniques, ISO-2022-JP (JIS X 0208:1997)
- UCS-4, UCS-2 : ISO/IEC 10646-1:2000 Information technology -- Universal Multiple-Octet Coded Character Set (UCS) -- Part 1: Architecture and Basic Multilingual Plane.



© 2000 - 2023 ECHONET Consortium

- Latin-1 : ISO/IEC 8859-1:1998 Information technology -- 8-bit single-byte coded graphic character sets -- Part 1: Latin alphabet No. 1
- UTF-8 : RFC 3629 “UTF-8,a transformation format of ISO 10646”

(5) Character string to present to the user

A SET on this property sets the character string to present to the user of this class, the length of the character string and the character code to use to present the character string. SETs on this property must be effective when the “Character string setting acceptance status” property value is “0x30.”

The highest-order byte shall indicate the byte code sequence length of the character string to present to the user converted to the hexadecimal format and the second-highest-order byte shall indicate the character code to use to present the character string. The second-highest-order byte shall be followed by a byte (the third byte) containing “0x00” (reserved for future use), which shall be followed by a number of bytes (the fourth and succeeding bytes), each assigned with one of the first and succeeding byte code characters, starting with the first byte code character, of the character string to present to the user. The lowest-order byte shall be assigned with the last byte code character of the character string to present to the user. The character string to present to the user may contain control codes. A GET on this property acquires “the byte code sequence length of the character string to present to the user converted to the hexadecimal format that has been set in this property through the SET function” (first byte), “the character code to use to present the character string to the user that has been set through the SET function” (second byte), the value “0x00” (reserved for future use) (third byte) and “the byte code sequence for the character string to present to the user that has been successfully set” (fourth and succeeding bytes).

The character codes are represented as follows: ANSI X3.4 = 0x01, Shift-JIS = 0x02, JIS = 0x03, Japanese EUC = 0x04, UCS-4 = 0x05, UCS-2 = 0x06, Latin-1 = 0x07, UTF-8 = 0x08. This class shall use the character code specified by the character code setting of this property when handling the received character string to present to the user. This property shall be effective even when the value of the “Operation status” property (0x80) is OFF (0x31). The byte order for this property shall be as shown in the figure below.

| The 1st byte (The most significant) | The 2nd byte | The 3rd byte | The 4th byte | | The Nth byte (The least significant) |
|---|---|---|---|---|---|
| Number of bytes from the 4th to the Nth byte (in case of SET) | Character code | 0x00 (reserved for future) | Character string The first byte | ・・・・・・・ | Character string The last byte |

Below are examples showing how this property works.

When the character string “ECHONET” is set using the SET function with ANSI X3.4 specified



© 2000 - 2023 ECHONET Consortium

as the character code to use:

・The content of the property will be “0x0701004543484F4E4554.”

Examples of the result of a subsequent GET:

・Normal success: 0x0701004543484F4E4554

・Failure: 0x0701004543484F4E (The writing of the last 2 bytes failed because of a memory shortage, etc.)

・Success: 0x04020031323334 (Another node has set “0x04020031323334” using the SET function after the first SET.)

(6) Length of character string accepted

A GET on this property acquires the data length of the newest character string to present to the user which is being held by the “Character string to present to the user” property of this class as the first byte. This is not necessarily the same as the first byte acquired by a GET on the “Character string to present to the user” property (byte value of the byte code sequence length). The content of this property shall be updated in conjunction with the “Character string to present to the user” property. The second byte of this property shall be “0x00” (reserved for future use). This property shall be effective even when the value of the target “Operation status” property for writing (0x80) is OFF (0x31).



© 2000 - 2023 ECHONET Consortium

## 3．7．2 Requirements for television class

Class group code : 0x06

Class code : 0x02

Instance code : 0x01–0x7F (0x00: All-instance specification code)

These requirements for the television class shall apply to televisions in general.

Functions unique to this class will be added in the future as necessary.

| Property name | EPC | Contents of property<br>Value range (decimal notation) | Data type | Data size | Unit | Access rule | Mandatory | Announcement at status change | Remark |
|---|---|---|---|---|---|---|---|---|---|
| Operation status | 0x80 | Refer to the section on the requirements for the display class (class group code = 0x06, class code = 0x01). | unsigned char | 1 byte | — | Set | ○ | ○ | |
| | | | | | | Get | ○ | | |
| Display control setting | 0xB0 | Refer to the section on the requirements for the display class (class group code = 0x06, class code = 0x01). | unsigned char | 1 byte | — | Set/ Get | | | |
| Character string setting acceptance status | 0xB1 | Refer to the section on the requirements for the display class (class group code = 0x06, class code = 0x01). | unsigned char | 1 byte | — | Get | Mandatory | ○ | |
| Supported character codes | 0xB2 | Refer to the section on the requirements for the display class (class group code = 0x06, class code = 0x01). | unsigned char × 2 | 2 bytes | — | Get | Mandatory | | |
| Character string to present to the user | 0xB3 | Refer to the section on the requirements for the display class (class group code = 0x06, class code = 0x01). | unsigned char × Max 247 | Max 247bytes | — | Set | ○ | | |
| | | | | | | Get | | | |
| Length of character string accepted | 0xB4 | Refer to the section on the requirements for the display class (class group code = 0x06, class code = 0x01). | unsigned char | 2 bytes | — | Get | Mandatory | | |

Note: In the “Announcement at status change” column, ○ denotes mandatory processing when the property is implemented.

(1) Operation status (The super class property is inherited.)

Sets the ON/OFF status of the television and acquires the current operation status setting. The values “0x30” and “0x31” shall be assigned to the ON and OFF states, respectively. In the case where an “energy service” is to be supported, the implementation of the SET function for this property is mandatory.

(2) Display control setting

Refer to the section on the requirements for the display class (class group code = 0x06, class code = 0x01).



© 2000 - 2023 ECHONET Consortium

(3) Character string setting acceptance status

Refer to the section on the requirements for the display class (class group code = 0x06, class code = 0x01).

In the case where a “home amenity service” or a “security service” is to be supported, the implementation of this property is mandatory

(4) Supported character codes

Refer to the section on the requirements for the display class (class group code = 0x06, class code = 0x01).

In the case where a “home amenity service” or a “security service” is to be supported, the implementation of this property is mandatory.

(5) Character string to present to the user

Refer to the section on the requirements for the display class (class group code = 0x06, class code = 0x01).

The implementation of the SET function for this property is mandatory.

(6) Length of character string accepted

Refer to the section on the requirements for the display class (class group code = 0x06, class code = 0x01).

In the case where a “home amenity service” or a “security service” is to be supported, the implementation of this property is mandatory.



© 2000 - 2023 ECHONET Consortium

## 3．7．3 Requirements for audio class

Class group code : 0x06

Class code : 0x03

Instance code : 0x01–0x7F (0x00: All-instance specification code)

| Property name | EPC | Contents of property<br>Value range (decimal notation) | Data type | Data size | Unit | Access rule | Man-datory | Announce-ment at status change | Remark |
|---|---|---|---|---|---|---|---|---|---|
| Operation status | 0x80 | This property indicates the ON/OFF status.<br>ON = 0x30, OFF = 0x31 | unsigned char | 1 byte | — | Set<br>Get | <br>○ | ○ | |
| Volume setting | 0xB8 | This property is used to set the volume of audio equipment and to acquire the setting status.<br>0x00–0x64 (0–100) | unsigned char | 1 byte | % | Set/ Get | | ○ | |
| Mute setting | 0xB9 | This property is used to set audio equipment to mute and to acquire the setting status.<br>Mute ON = 0x30, Mute OFF = 0x31 | unsigned char | 1 byte | — | Set/ Get | | ○ | |
| Input source setting | 0xBC | This property is used to change the input source of audio equipment and to acquire the setting status.<br>Byte 1: Input source type 0x00–0xFE (0–254)<br>Byte 2: Input source number 0x01–0xFE (1–254) | unsigned char × 2 | 2 bytes | — | Set/ Get | | ○ | |

Note: In the “Announcement at status change” column, ○ denotes mandatory processing when the property is implemented.

(1) Operation status (inherited from the super class property)

This property is used to turn the power of audio equipment ON or OFF and to acquire the operation status. The ON status corresponds to 0x30, and the OFF status corresponds to 0x31.

(2) Volume setting

“Set” of this property is used to set the volume of audio equipment.

“Get” of this property is used to acquire the current volume.

This property indicates the volume value by percentage. The value is 0x00 (0) for the minimum volume and 0x64 (100) for the maximum volume.

When the volume of the main unit is continuously changed, a status change announcement may be issued at every change, at a discrete value, or at a final value. (Example: When the volume is continuously changed from 0x10 to 0x20 by main unit operation, a status change announcement may be issued 16 times from 0x11 to 0x20, two times at 0x18 and 0x20, or once at the final value of 0x20.)



© 2000 - 2023 ECHONET Consortium

(3) Mute setting

"Set" of this property is used to set the mute function of audio equipment to ON or OFF.

"Get" of this property is used to acquire the current mute status.

Voice is not output when the mute function is ON but is output when it is OFF.

The property value is 0x30 for mute ON and 0x31 for mute OFF.

The correlation between the "mute setting" property and the "volume setting" property shall depend on the implementation.

(Example 1: If the value of the "volume setting" property is 20 when the mute function is OFF, the value of the "volume setting" property remains 20 even after the mute function is turned ON. When the mute function is ON, the value of the "volume setting" property may be 0.

(Example 2: If the value of the "volume setting" property is 20 when the mute function is OFF, the value of the "volume setting" property remains 20 even after the mute function is turned OFF, ON, and OFF. Alternatively, the value of the "volume setting" property may become 0.)

(4) Input source setting

"Set" of this property is used to change the input source of audio equipment.

Byte 1 indicates an input source type and Byte 2 indicates an input source number.

Input source type refers to the type of an input source, such as Tuner or Disk, as defined in the table below.

Input source number indicates which input source when there are several input sources of the same type.

Input source number starts from 1. When there are three HDMI input ports, for example, Input source numbers 1, 2, and 3 correspond to HDMI 1, 2, and 3, respectively.

"Get" of this property is used to acquire the current input source information. When the "operation status" property (0x80) is OFF (0x31), the input source type at Byte 1 and the input source number at Byte 2 shall depend on the implementation.

(Example 1: The value of the "input source setting" property at power-off is 0xFE (no setting) for both the input source type at Byte 1 and the input source number at Byte 2.

(Example 2: If the input source type is Tuner and the input source number is 1 at the next power-on, the value of the "input source setting" property at power-off is 0x00 (Tuner) for the input source type at Byte 1 and 0x01 (No.1) for the input source number at Byte 2.)

| Byte 1: Input source type | Selected source equipment | Remarks |
|---|---|---|



© 2000 - 2023 ECHONET Consortium

| Setting | | |
|---|---|---|
| 0x00 | Tuner built into the equipment | |
| 0x01 | 8 cm/12 cm optical disk device, such as CD, DVD, or BD built into the equipment | |
| 0x02 | MD built into the equipment | |
| 0x08 | Cassette built into the equipment | |
| 0x10 | Analog/digital input terminal for external input | For analog, optical, or coaxial voice input |
| 0x11 | HDMI® terminal for external input | |
| 0x20 | USB for external input | |
| 0x21 | Built-in memory card slot | SD or other memory card |
| 0x22 | Built-in storage | |
| 0x23 | Dedicated terminal for portable player | Music player, etc. |
| 0x30 | Network-related input | Wireless input using Wireless Bluetooth® or Miracast™ and cable network input |
| 0x80–0xBF | Equipment-unique area | Application service and other functions unique to the equipment |
| 0xC0–0xFD | Prohibited | |
| 0xFE | Not set | It is prohibited to set this value when no input source information is set. |
| Other than above | Reserved | Reserved for future use |

HDMI, HDMI logo, and High-Definition Multimedia Interface are trademarks or registered trademarks of HDMI Licensing in the United States and other countries.

Bluetooth is a registered trademark of U.S. Bluetooth SIG, Inc.

Miracast™ is a trademark of Wi-Fi Alliance.



© 2000 - 2023 ECHONET Consortium

## 3．7．4 Requirements for network camera

Class group code : 0x06

Class code : 0x04

Instance code : 0x01- 0x7F (0x00: All-instance specification code)

| Property name | EPC | Contents of property<br>Value range (decimal notation) | Data type | Data size | Unit | Access rule | Man-datory | Announce-ment at status change | Remark |
|---|---|---|---|---|---|---|---|---|---|
| Operation status | 0x80 | This property indicates the ON/OFF status.<br>ON = 0x30, OFF = 0x31 | unsigned char | 1 byte | — | Set<br>Get | <br>○ | ○ | |
| Still image photography setting acceptance status | 0xC0 | Indicates whether the device is ready to accept still image photography.<br>Ready = 0x30, busy = 0x31 | unsigned char | 1 byte | — | Get | ○ | | |
| Still image photography setting | 0xC1 | Sets still image photography.<br>Still image photography = 0x30 | unsigned char | 1 byte | — | Set | ○ | | |
| Transfer setting | 0xD0 | Used to set the method of transferring photographic data and acquire the set status.<br>Indicates status using a bitmap.<br>Set to 1 for valid setting, 0 for invalid setting.<br>Bit 0: local storage transfer<br>Bit 1: remote storage transfer<br>Bit 2: mail transfer<br>Bit 3-7: reserved for future use | unsigned char | 1 byte | — | Set/ Get | | ○ | |

Note: In the “Announcement at status change” column, ○ denotes mandatory processing when the property is implemented.

(1) Operation status (inherited from the super class property)

This property is used to set the network camera power ON or OFF and acquire the operation status. Property values 0x30 and 0x31 correspond to ON and OFF, respectively.

(2) Still image photography setting acceptance status

“Get” of this property is used to acquire the status indicating whether this class can accept the still image photography setting property settings or not. Property values 0x30 and 0x31 correspond to states in which settings can be accepted (Ready) and cannot be accepted (Busy), respectively.

(3) Still image photography setting

“Set” of this property activates still image photography. Photographs are taken in line with the



© 2000 - 2023 ECHONET Consortium

photographic setting of devices equipped with this class. The specific photographic setting method depends on individual devices, and is not particularly stipulated.

Following a property value set request (SetI/SetC), if photography is possible after still image photography (0x30) has been set, “property value set response” (Set_Res) is returned. If photography is impossible, “property value set response impossible” (SetI_SNA/SetC_SNA) is returned.

(4) Transfer settings

A list of methods for transferring data photographed using the EPC 0xC1 “Still image photography setting” is indicated in bitmap format. Local storage transfer, remote storage transfer and mail transfer are stipulated as the methods of achieving this. The details of each are shown below.

Local storage transfer indicates that data are transferred to memory device built into the device or a USB hard disk or other external memory device directly connected to the device.

Remote storage transfer indicates that data are transferred to a memory device accessible via the network.

Mail transfer indicates that data are transferred by means of a mail service.

A bit value of 0 indicates that the transfer method in question is invalid, and 1 that it is valid.

When the transfer method in question cannot be implemented, the bit value shall be set to 0 (invalid).

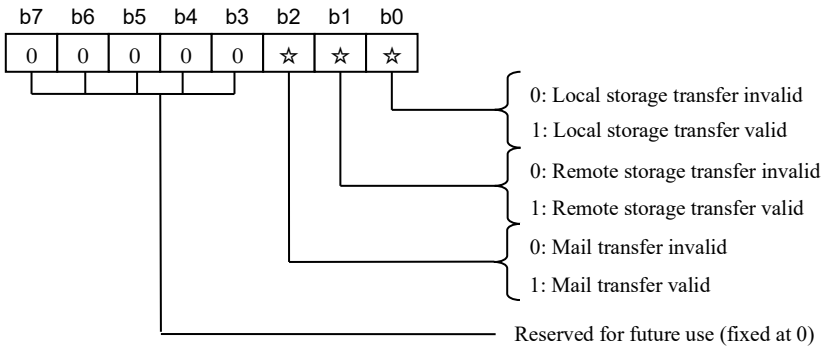




© 2000 - 2023 ECHONET Consortium

# Annex 1 Property Map Description Format

When the number of properties is less than 16, Description Format 1 described below shall be used.
When the number of properties is 16 or more, Description Format 2 described below shall be used.

Description Format 1

First byte : Number of properties (binary notation)

Second and succeeding bytes : The property codes (1-byte codes) shall be listed as they are.

Here is an example of property map description format (1) for an ECHONET node of the switch class (0x05FD).

| NO | PROPERTY NAME | EPC |
|---|---|---|
| 1 | Operation status | 0x80 |
| 2 | Installation location | 0x81 |
| 3 | Standard version information | 0x82 |
| 4 | Identification number | 0x83 |
| 5 | Fault status | 0x88 |
| 6 | Manufacturer code | 0x8A |
| 7 | Status change announcement property map | 0x9D |
| 8 | Set property map | 0x9E |
| 9 | Get property map | 0x9F |
| 10 | Connected device | 0xE0 |

The first byte is 0x0A because the number of properties is 10. For the second and later bytes, the above EPCs are enumerated as 0x0A, 0x80, 0x81, 0x82, 0x83, 0x88, 0x8A, 0x9D, 0x9E, 0x9F, and 0xE0.

Description Format 2

First byte : Number of properties (binary notation)

Second to 17th bytes : "1" shall be set in the bits representing the codes for the properties that exist in the 16-byte table shown below, and the values shall be listed in the order of byte number from the second byte.

| | Bit 7 | Bit 6 | Bit 5 | Bit 4 | Bit 3 | Bit 2 | Bit 1 | Bit 0 |
|---|---|---|---|---|---|---|---|---|
| Second byte | F0 | E0 | D0 | C0 | B0 | A0 | 90 | 80 |
| Third byte | F1 | E1 | D1 | C1 | B1 | A1 | 91 | 81 |
| Fourth byte | F2 | E2 | D2 | C2 | B2 | A2 | 92 | 82 |
| Fifth byte | F3 | E3 | D3 | C3 | B3 | A3 | 93 | 83 |



© 2000 - 2023 ECHONET Consortium

| | | | | | | | | |
|---|---|---|---|---|---|---|---|---|
| Sixth byte | F4 | E4 | D4 | C4 | B4 | A4 | 94 | 84 |
| Seventh byte | F5 | E5 | D5 | C5 | B5 | A5 | 95 | 85 |
| Eighth byte | F6 | E6 | D6 | C6 | B6 | A6 | 96 | 86 |
| Ninth byte | F7 | E7 | D7 | C7 | B7 | A7 | 97 | 87 |
| Tenth byte | F8 | E8 | D8 | C8 | B8 | A8 | 98 | 88 |
| Eleventh byte | F9 | E9 | D9 | C9 | B9 | A9 | 99 | 89 |
| Twelfth byte | FA | EA | DA | CA | BA | AA | 9A | 8A |
| Thirteenth byte | FB | EB | DB | CB | BB | AB | 9B | 8B |
| Fourteenth byte | FC | EC | DC | CC | BC | AC | 9C | 8C |
| Fifteenth byte | FD | ED | DD | CD | BD | AD | 9D | 8D |
| Sixteenth byte | FE | EE | DE | CE | BE | AE | 9E | 8E |
| Seventeenth byte | FF | EF | DF | CF | BF | AF | 9F | 8F |

Note) Bit value 0: the property does not exist; bit value 1: the property exists.

Following is an example of Description Format 2 for the property map. This example shows the case of an ECHONET node in which the “Home air conditioner” class (0x0130) is implemented.

| NO | Property name | EPC | Corresponding property map bit |
|---|---|---|---|
| 1 | Operation status | 0x80 | Bit 0 of the second byte |
| 2 | Installation location | 0x81 | Bit 0 of the third byte |
| 3 | Standard version information | 0x82 | Bit 0 of the fourth byte |
| 4 | Identification number | 0x83 | Bit 0 of the fifth byte |
| 5 | Current limit setting | 0x87 | Bit 0 of the ninth byte |
| 6 | Fault status | 0x88 | Bit 0 of the tenth byte |
| 7 | Fault description | 0x89 | Bit 0 of the eleventh byte |
| 8 | Manufacturer code | 0x8A | Bit 0 of the twelfth byte |
| 9 | Business facility code | 0x8B | Bit 0 of the thirteenth byte |
| 10 | Product code | 0x8C | Bit 0 of the fourteenth byte |
| 11 | Production number | 0x8D | Bit 0 of the fifteenth byte |
| 12 | Production date | 0x8E | Bit 0 of the sixteenth byte |
| 13 | Power-saving operation setting | 0x8F | Bit 0 of the seventeenth byte |
| 14 | ON timer reservation setting | 0x90 | Bit 1 of the second byte |
| 15 | Cumulative operating time | 0x9A | Bit 1 of the twelfth byte |
| 16 | SetM property map | 0x9B | Bit 1 of the thirteenth byte |



© 2000 - 2023 ECHONET Consortium

| | | | |
|---|---|---|---|
| 17 | GetM property map | 0x9C | Bit 1 of the fourteenth byte |
| 18 | Status change announcement property map | 0x9D | Bit 1 of the fifteenth byte |
| 19 | Set property map | 0x9E | Bit 1 of the sixteenth byte |
| 20 | Get property map | 0x9F | Bit 1 of the seventeenth byte |
| 21 | Operation mode setting | 0xB0 | Bit 3 of the second byte |
| 22 | Temperature setting | 0xB3 | Bit 3 of the fifth byte |

When the properties listed above are published in the ECHONET node:

The first byte is 0x16 because the number of properties is 22. The second byte is 0x0B (=b'00001011') because the 0x80, 0x90 and 0xB0 properties are published and the corresponding bits are "Bit 0," "Bit 1" and "Bit3." The third, fourth, ninth, tenth and eleventh bytes are 0x01 because the 0x81, 0x82, 0x87, 0x88 and 0x89 properties are published and the corresponding bit is "Bit 0." The fifth byte is 0x09 (=b'00001001') because the 0x83 and 0xB3 properties are published and the corresponding bits are "Bit 0" and "Bit 3." The twelfth to seventeenth bytes are 0x03 (=b'00000011') because the 0x8A, 0x9A, 0x8B, 0x9B, 0x8C, 0x9C, 0x8D, 0x9D, 0x8E, 0x9E, 0x8F and 0x9F properties are published and the corresponding bits are "Bit 0" and "Bit 1."

Therefore, the property map description format for this case is:

"0x16, 0x0B, 0x01, 0x01, 0x09, 0x00, 0x00, 0x00, 0x01, 0x01, 0x01, 0x03, 0x03, 0x03, 0x03, 0x03, 0x03"



© 2000 - 2023 ECHONET Consortium